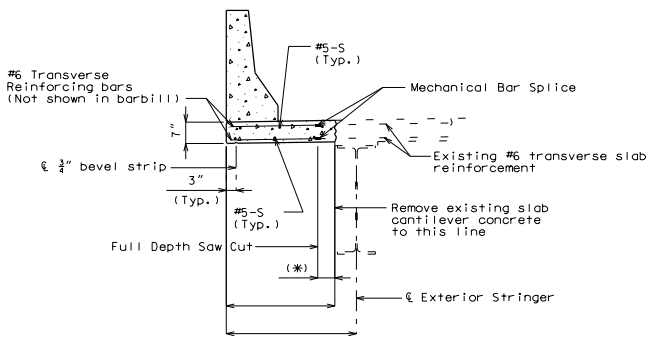

TYPICAL PART SECTION FOR OPTIONAL
SLAB CANTILEVER REPLACEMENT

OPTIONAL SLAB CANTILEVER REPLACEMENT

The box shown below indicating whether or not the optional slab cantilever replacement method was used should be checked by MoDOT Construction personnel:

☐ Optional replacement method WAS used.

☐ Optional replacement method WAS NOT used.

NOTE:

(✳) Min. distance required for mechanical bar splice. All existing transverse slab reinforcement in this area shall be cleanly stripped.

With the optional slab cantilever replacement, the contractor shall use a mechanical bar splice for the existing exposed transverse slab reinforcement. The length of the new #6 reinforcing bars used with the mechanical bar splice shall be determined by the contractor based on the style of mechanical bar splice used and other considerations. Mechanical bars splices shall be in accordance with Sec 706 except that there will be no seperate pay item for mechanical bar splices. The mechanical bar splices and accompanying new #6 reinforcing bars will be considered completely covered by contract unit price for other items included in the contract.

For spacing longitudinal reinforcing steel, see Sheet No. .

For details of Safety Barrier Curb, see Sheet Nos. , , .

DETAILS OF OPTIONAL SLAB CANTILEVER REPLACEMENT

"THIS MEDIA SHOULD NOT BE CONSIDERED A CERTIFIED DOCUMENT."

DATE PREPARED 6/28/2011	
ROUTE ✳	STATE MO
DISTRICT BR	SHEET NO. ✳
COUNTY ✳	
JOB NO. ✳	
CONTRACT ID.	
PROJECT NO.	
BRIDGE NO. RHB06	

DESCRIPTION | DATE

MISSOURI HIGHWAYS AND TRANSPORTATION COMMISSION
105 WEST CAPITOL
JEFFERSON CITY, MO 65102
1-888-ASK-MODOT (1-888-275-6636)

IF A SEAL IS PRESENT ON THIS SHEET IT HAS BEEN ELECTRONICALLY SEALED AND DATED.

REV.

Detailed
Checked

Note: This drawing is not to scale. Follow dimensions.

Sheet No. of