FLAT STEEL BLADES MGS-91-02H

1.0 Description. This specification covers flat steel blades fabricated from plate steel meeting the requirements and dimensions specified herein.

2.0 Materials.

2.1 Chemical Composition. When sampled and tested in accordance with the designated methods set forth in ASTM E 30, the following chemical requirements shall apply.

	Min.	Max.
Carbon, Percent, (Direct Combustion Method)	0.75	0.99
Manganese, Percent, (Bismuthate Method)	0.60	0.90
Phosphorus, Percent, (Alkalimetric Method)	----	0.04
Sulfur, Percent, (Evolution Method)	----	0.05
Silicon, Percent, (Sulfuric Acid Method)	----	0.30

2.2 Physical Requirements.

2.2.1 Brinell Hardness, (ASTM E 10), shall be between 250 minimum and 325 maximum.

2.2.2 Punching. The blades are to be punched in accordance with the detailed drawings which are attached and made a part of these specifications.

2.2.2.1 Moldboards are punched with holes 1/8 inch larger than the blade bolts. Accordingly, blade punching will be of such accuracy, both for the spacing between the holes and for the spacing between the end hole and the end of the blade, that the blades will fit the moldboards, thus making the blade sections interchangeable.

2.2.3 Dimensions. The blades are to be straight, with both ends square. The following dimensions and tolerances shall apply.

Width*	6 inches or 8 inches ± 1/8 inch
Length	10 feet ± 1/8 inch
	11 feet ± 1/8 inch
	12 feet ± 1/8 inch
	14 feet ± 1/8 inch
	16 feet ± 1/8 inch
Thickness	1/2 inch ± 1/16 inch

* Note – Required width will be specified in the bid request.

2.2.3.1 The finished blades shall not be twisted, shall be free from flaws and injurious defects, and shall have good workmanlike finish. Longitudinal warp is allowed but shall not deviate more than 1/8 inch per foot of blade length and shall be uniformly distributed over the length of the blade. The allowable longitudinal warp for a 10 foot long blade shall be no greater than 1-1/4 inch, for an 11 foot long blade 1-3/8 inch, for a 12 foot long blade

1-1/2 inch, for a 14 foot long blade 1-3/4 inch, for a 16 foot long blade 2 inches. The cutting edge that rests upon the pavement shall be straight and true. The longitudinal warp and the alignment of the cutting edge shall be measured by extending a straight edge from one end of the blade to the other measuring from the straight edge to the blade at the mid-point of length.

2.2.4 Weight. The blades shall have a weight per linear foot of 12.0 pounds with a 5 percent minus tolerance. To determine the weight per linear foot, blades may be selected at random from a shipment and weighed on accurate scales.

2.2.5 Any paint used to coat the blades shall be dry prior to shipment and shall not smear or track during handling.

3.0 Certification and Acceptance. Prior to approval and use of any material delivered, the manufacturer shall submit to State Materials Engineer, P. O. Box 270, Jefferson City, Missouri 65102, a certification certifying the blades supplied conform to all requirements of these specifications.

3.1 The "Certification Statement" form shown in Section 4.0 is to be used when certifying. The certification shall include or have attached specific results of tests performed on the blades for chemical composition, hardness and weight per linear foot. The certification shall show the purchase order number, destination, quantity of material represented at each destination and shipping date.

3.2 Acceptance of the blades shall be based on the manufacturer's certification and upon results of such tests as may be performed on samples of the material. When samples are taken, one complete blade of each length shall be taken to represent the shipment. A shipment will be considered as all blades represented on one certification and shipped on one date, regardless of various destinations. If a blade fails to meet any of the specified requirements, two additional blades will be selected for retest from the same quantity represented by that certification. Both of these retest samples must meet all requirements or the entire quantity will be rejected.

3.3 If the blades are rejected, no payment will be made and the cost of blades destroyed during sampling and testing shall be borne by the supplier.

4.0 Certification Statement.

CERTIFICATION STATEMENT
FLAT BLADES

State Materials Engineer
P. O. Box 270
Jefferson City, Missouri 65102

Dear Sir:

We hereby certify that the flat blades described below comply with all requirements of Specification MGS-91-02G and in accordance with Bid Request No. _____.

The following blades manufactured by _____ are covered by this certification.

Purchase Order No.	Destination	Quantity & Size	Shipping Date

Following are results of test performed on these blades:

Chemical Composition
Percent C _____
Percent Mn _____
Percent P _____
Percent S _____
Percent Si _____

Brinell Hardness_____

Weight Per Linear Foot _____

Certified By: _____

Title: _____

Date: _____

Results of tests may be shown on attachments rather than on this form, if preferred.

This form is to be completed, signed, and submitted for each shipment, at the same time as blades are shipped. A shipment is defined as all blades represented on one certification and shipped on one date, regardless of various destinations.

Cutting Edge Punchings for Special Blades (Flat Steel)

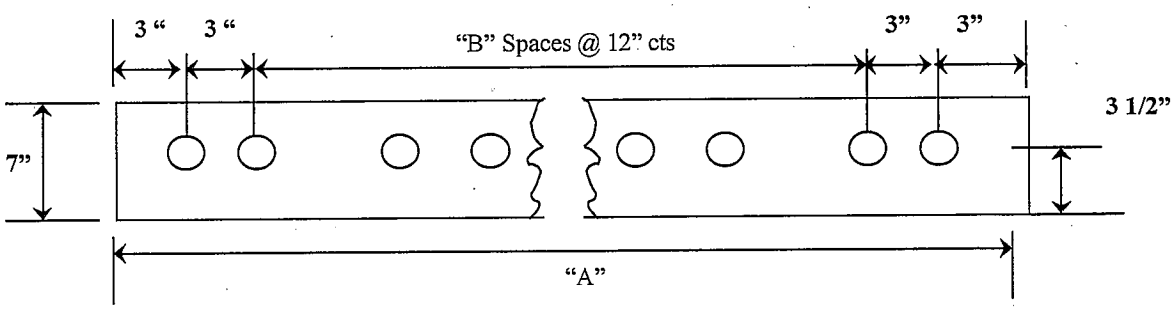

Overall Length of Spaces "A"	Number "B"
10' – 0 "	9
11' – 0 "	10
12' – 0"	11
14' – 0 "	13
16' – 0 "	15

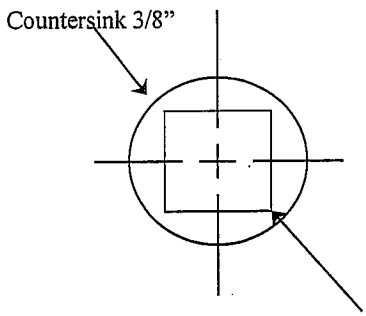

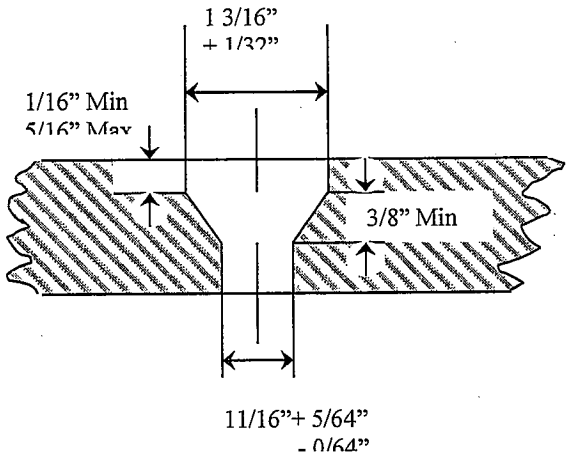

NOTE: This drawing not to Scale. Follow Dimensions.