HARDENED STEEL SNOW PLOW BLADES MGS-91-04E

**1.0 Description.** This specification covers flame hardened steel snow plow blades fabricated from plate steel meeting the requirements and dimensions specified herein.

**2.0 Materials.**

**2.1 Chemical Composition.** When sampled and tested in accordance with the designated methods set forth in ASTM E 30, the following chemical requirements shall apply.

| | Min. | Max. |
|---|---|---|
| Carbon, Percent, (Direct Combustion Method) | 0.70 | 0.80 |
| Manganese, Percent, (Bismuthate Method) | 0.50 | 0.80 |
| Phosphorus, Percent, (Alkalimetric Method) | ---- | 0.04 |
| Sulfur, Percent, (Evolution Method) | ---- | 0.05 |

**2.2 Physical Requirements.**

**2.2.1 Hardness.** Each blade shall be selectively hardened front and back to a Rockwell C Hardness of 57 to 67 when tested in accordance with ASTM E 18. The hardened portion of the blade shall be not less than 3/32 inch deep by 2-3/8 inches high, starting within 3/4 inch of the bottom edge of the blade, and shall extend uniformily along the entire length of both faces of the blade, except a maximum length of one inch at each end of the blade need not be hardened.

**2.2.1 Punching.** Punching shall be 11/16 inch square holes with 1-5/32 inch diameter countersink 3/8 inch deep to receive 5/8 inch diameter plow bolts. Location and spacing of the holes shall be as shown on the attached drawing and made a part of these specifications.

**2.2.2.1** Moldboards are punched with holes 1/8 inch larger than the blade bolts. Accordingly, blade punching will be of such accuracy, both for the spacing between the holes and for the spacing between the end hole and the end of the blade, that the blades will fit the moldboards, thus making the blade sections interchangeable.

**2.2.3 Dimensions.** The blade dimensions shall be as shown on the attached drawing. Ends shall be square and cleanly cut. The blades shall be capable of being readily fastened to the moldboard without straightening, undue tightening of nuts, drilling, or retrofitting in any manner. Longitudinal warp shall not exceed 5/32 inch in a five foot blade section or 3/16 inch in a six foot blade section. The edge that rests upon the pavement shall be straight and true within the tolerances for longitudinal warp. The longitudinal warp and the alignment of this edge shall be measured by extending a straight edge from one end of the blade to the other and measuring from the straight edge to the blade at the midpoint of the length.
The blades shall be free from flaws and injurious defects and shall have a workmanlike finish.

**2.2.4** Any paint used to coat the blades shall be dry prior to shipment and shall not smear or track during handling.

**3.0 Marking.** Each blade shall have a legible identifying mark indicating a flame hardened type blade.

**4.0 Certification and Acceptance.**

**4.1** Prior to approval and use of any material delivered, the manufacturer shall submit to the State Materials Engineer, P. O. Box 270, Jefferson City, Missouri 65102, a certification in triplicate certifying the blades supplied conform to all requirements of these specifications.

**4.1.1** The "Certification Statement" form shown in Section 5.0 is to be used when certifying. The certification shall include or have attached specific results of tests performed on the blades for chemical composition, hardness and weight per linear foot. The certification shall show the purchase order number, destination, quantity of material represented at each destination and shipping date.

**4.2** Acceptance of the blades shall be based on the manufacturer's certification and upon results of such tests as may be performed on samples of the material. When samples are taken, one complete blade of each length shall be taken to represent the shipment. A shipment will be considered as all blades represented on one certification and shipped on one date, regardless of various destinations. If a blade fails to meet any of the specified requirements, two additional blades will be selected for retest from the same quantity represented by that certification. Both of these retest samples must meet all requirements or the entire quantity will be rejected.

**4.3** If the blades are rejected, no payment will be made and the cost of blades destroyed during sampling and testing shall be borne by the supplier.

**5.0 Certification Statement.**

CERTIFICATION STATEMENT
HARDENED STEEL SNOW PLOW BLADES

State Materials Engineer
P. O. Box 270
Jefferson City, Missouri 65102

Dear Sir:

We hereby certify that the hardened steel snow plow blades described below comply with all requirements of Specification MGS-91-04E and in accordance with Bid Request No. _____.

The following blades manufactured by_____are covered by this certification.

| Purchase Order No. | Destination | Quantity & Size | Shipping Date |
|---|---|---|---|
| | | | |
| | | | |
| | | | |
| | | | |
| | | | |
| | | | |
| | | | |
| | | | |

Following are results of test performed on these blades:

Chemical Composition
Percent C _____
Percent Mn _____
Percent P _____
Percent S _____

Rockwell C Hardness_____

Certified By: _____

Title: _____

Date: _____

Results of tests may be shown on attachments rather than on this form, if preferred.

This form is to be completed, signed, and submitted in triplicate for each shipment, at the same time as blades are shipped. A shipment is defined as all blades represented on one certification and shipped on one date, regardless of various destinations.

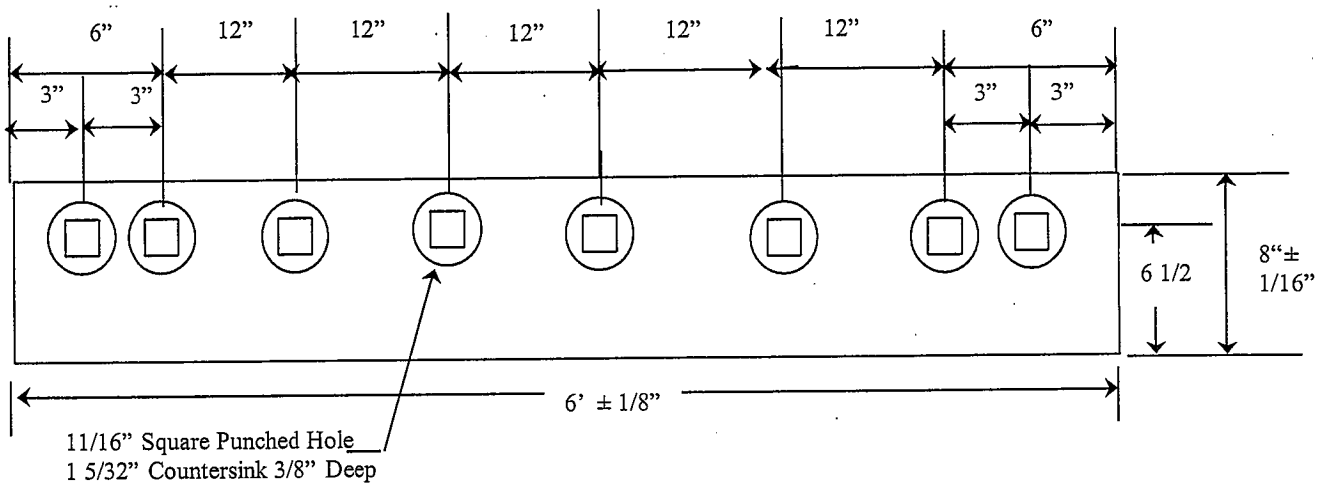


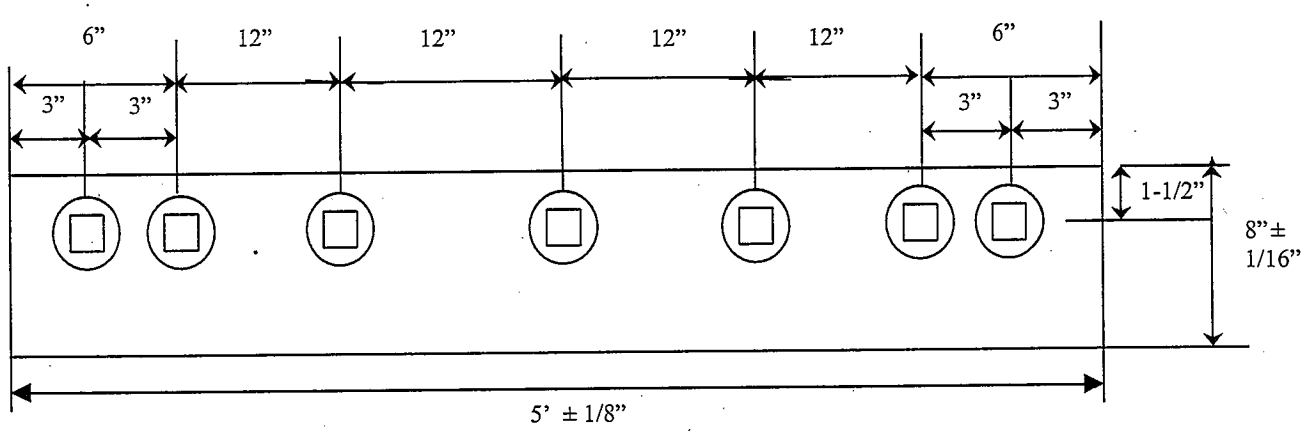


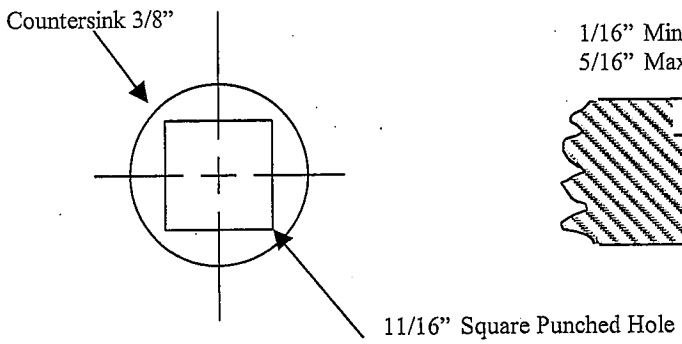


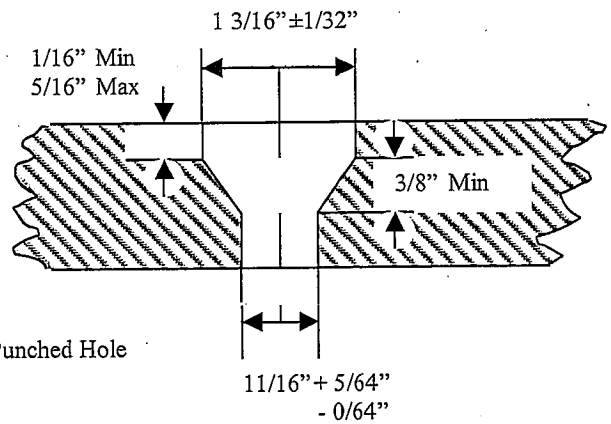


NOTE: This drawing not to scale.
Follow Dimensions.

1" x 8" Square Edge Flat Special Heat Treated Snow Plow Blade