OFFSET NOTE:
THE POST OFFSET DIMENSIONS ARE GIVEN TO THE CENTER OF THE TRAFFIC FACE OF THE BLOCKOUTS, EXCEPT AT THE FIRST TWO POSTS, WHERE THE DIMENSION IS TO THE CENTER OF THE TRAFFIC FACE OF THE POST. OFFSET POINTS ARE TO BE LOCATED BY CHORD MEASUREMENTS AT THE BACK OF THE RAIL EQUAL TO THE NOMINAL POST SPACINGS SHOWN. POSTS ARE TO BE SET APPROXIMATELY RADIAL TO THE RAILING AT EACH POST LOCATION.

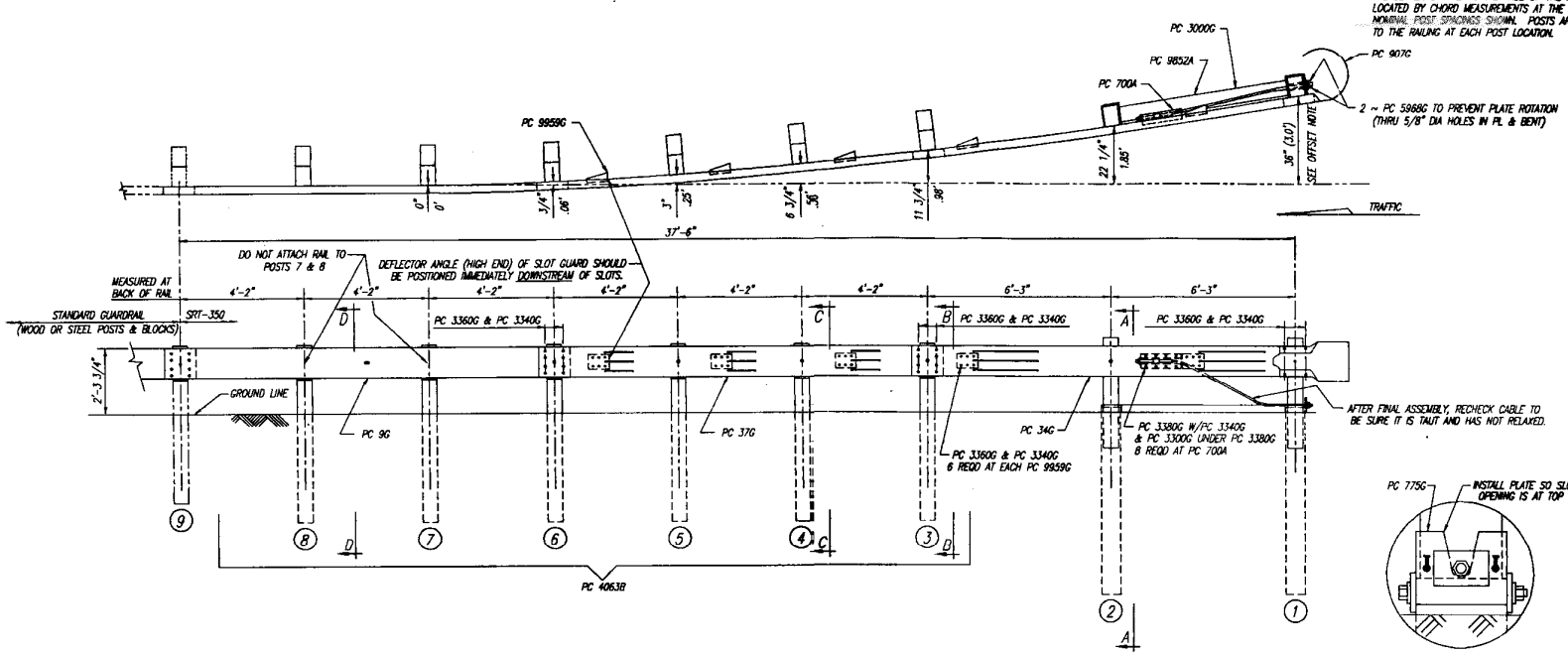

BILL OF MATERIAL		
PC	QTY	DESCRIPTION
9G	1	12/12'6/6'3/S (GUARDRAIL)
34G	1	12/12'6/6'3/S SRT-1 (GUA
37G	1	12/12'6/4'2/S SRT-2 (GUA
700A	1	CABLE ANCHOR BRACKET
705G	1	2"ø x 5 1/2" PIPE
742G	2	6'0 TUBE SLEEVE
775G	1	5/8 x 6 x 8 BEARING P
907G	1	12/BUFFER/ROLLED (TER
3000G	1	3/4 x 6'6 CABLE
3300G	20	5/8" WASHER
3340G	68	5/8" HEX NUT
3360G	50	5/8"ø x 1 1/4" SPLICE
3380G	8	5/8"ø x 1 1/2" HEX HD
3497G	2	5/8"ø x 9 1/2" HEX HD
3500G	2	5/8"ø x 10" POST BO
3580G	6	5/8"ø x 18" POST BO
3900G	1	1" WASHER
3910G	2	1" HEX NUT
4063B	6	6'0 POST 6 x 8
4075B	6	14" BLOCK 6 x 8
4147B	2	3' 9 POST 5 1/2 x 7 1
5968G	2	16d NAIL SRT
9852A	1	STRUT ASSEMBLY
9959G	5	SLOT GUARD
9961G	1	3/8 x 3 x 4 PLATE WAS

BEARING PLATE ORIENTATION

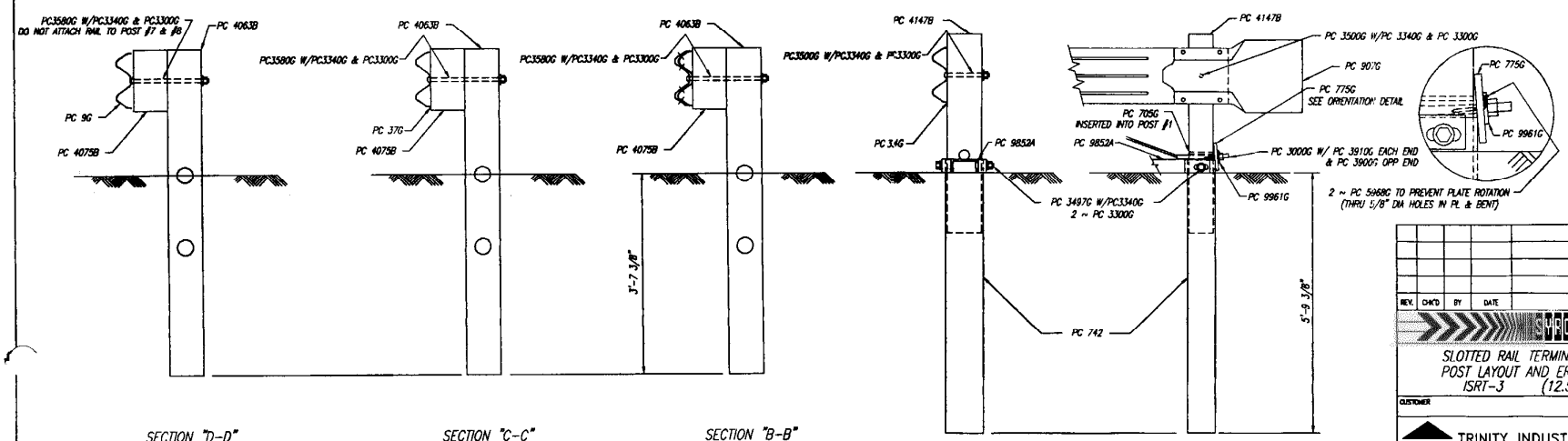

SECTION "D-D" (@ POST #7 & #8)

SECTION "C-C" (@ POSTS #4, & #5)

SECTION "B-B" (@ POSTS #3 & #6)

SECTION "A-A" (@ POST #2)

ENLARGED VIEW @ POST #1

This drawing and the information shown thereon is the sole property of TRINITY INDUSTRIES, INC. Neither the drawing nor such information is to be used for any purpose other than that for which it was specifically furnished to TRINITY INDUSTRIES, INC., nor is any reproduction authorized without written

REV.	CHK'D	BY	DATE	REMARKS

SYRO SRT-35

SLOTTED RAIL TERMINAL SRT-350
POST LAYOUT AND ERECTION DETAILS
ISRT-3 (12.5, 8 POST)

CUSTOMER | P.O. No.

DRAWN B. TAC
CHECKED
APPROVED
DATE 7-2-
ENG. FILE # SS4
SHT.No. E1 O
DRAWING No. SS 431

TRINITY INDUSTRIES, INC. SYRO
DALLAS, TX CENTERVILLE, UT GIRARD, OH LIMA, OH FORT WORTH, TX ELIZABETHTOWN, KY