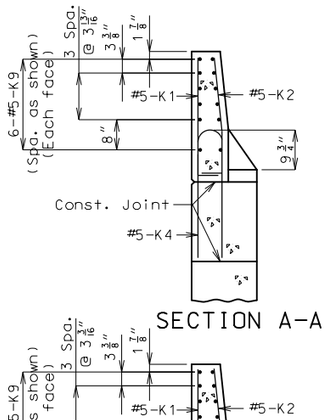

SECTION A-A

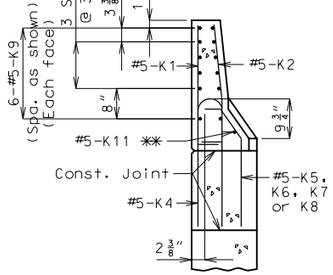

SECTION B-B

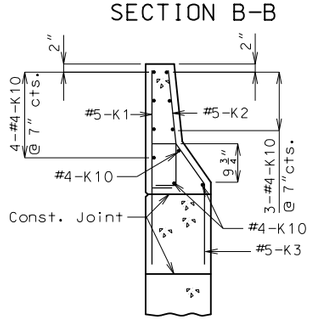

SECTION C-C

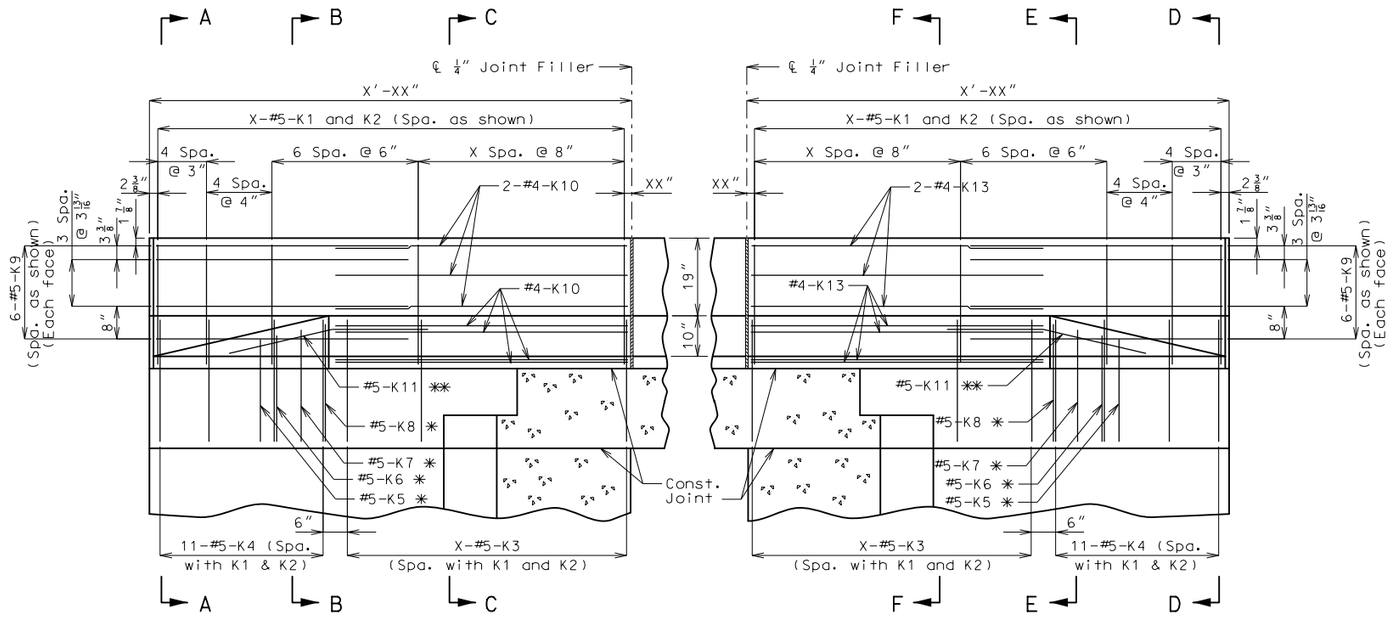

ELEVATION ELEVATION

✱ Spaced with #5-K4 bars.

✱✱ Fit #5-K11 bar to follow transition face of curb.

✱✱✱ Clip #5-K4 bars as required to maintain minimum clearance at bottom of wing.

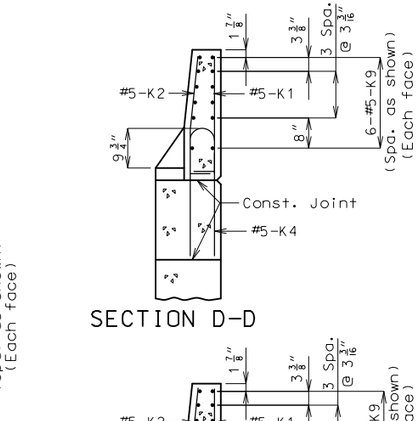

SECTION D-D

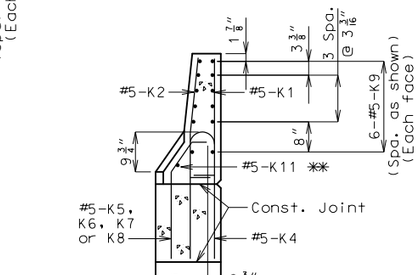

SECTION E-E

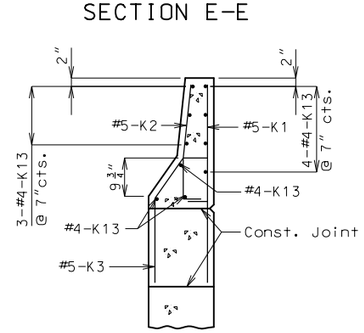

SECTION F-F

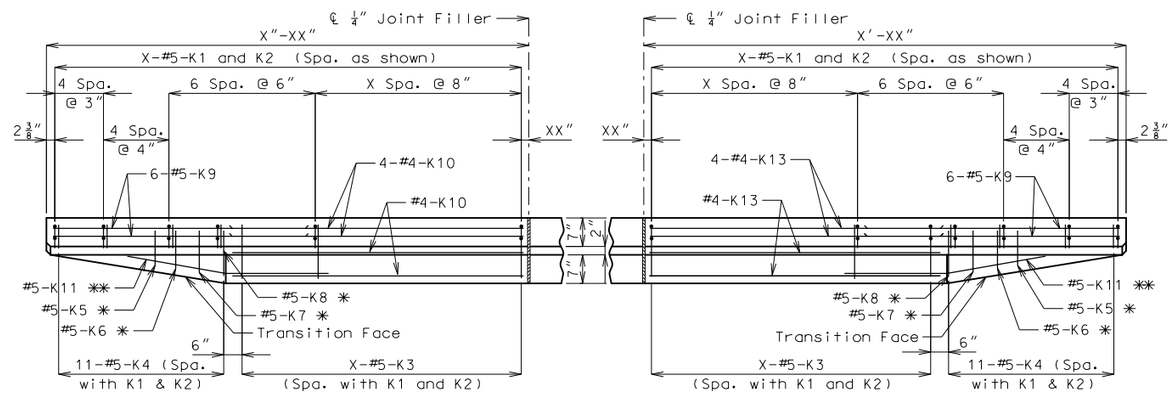

PLAN PLAN

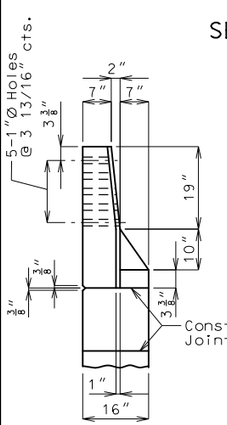

ELEVATION G-G

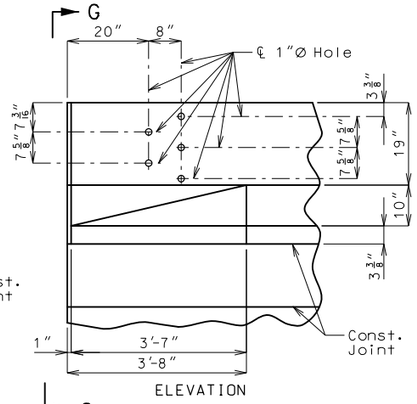

ELEVATION

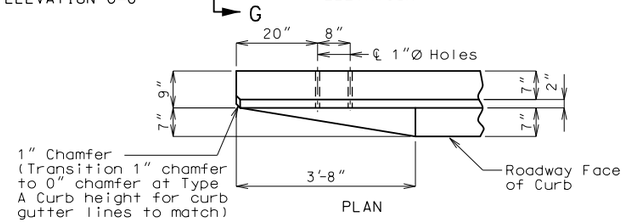

PLAN

DETAILS OF GUARD RAIL ATTACHMENT

Standard Drawing Guidance (do not show on plans):

For #5-K3 & K4 Bars, use Shape 11 or create shape as necessary when development length requires hook.

Note: Use a minimum lap of 2'-7" between K9 and K10 or K13 bars.

Concrete traffic barrier delineators shall be placed on top of the safety barrier curb as shown on Missouri Standard Plans 617.10 and in accordance with Sec 617. Delineators on bridges with two-lane, two-way traffic shall have retroreflective sheeting on both sides. Concrete traffic barrier delineators will be considered completely covered by the contract unit price for Safety Barrier Curb.

DETAILS OF SAFETY BARRIER CURB AT END BENTS

(Left barrier curb shown, right barrier curb similar)

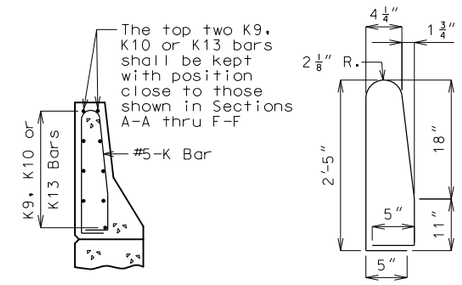

K1-K2 BAR PERMISSIBLE ALTERNATE SHAPE

(K3 or K4 thru K8 bars not shown for clarity)

The K1 and K2 bar combination may be furnished as one bar as shown, at the contractor's option.

"THIS MEDIA SHOULD NOT BE CONSIDERED A CERTIFIED DOCUMENT."

DATE PREPARED 3/17/2016	
ROUTE ✱	STATE MO
DISTRICT BR	SHEET NO. ✱
COUNTY ✱	
JOB NO. ✱	
CONTRACT ID.	
PROJECT NO.	
BRIDGE NO. BAC 11	

DESCRIPTION DATE

MISSOURI HIGHWAYS AND TRANSPORTATION COMMISSION
105 WEST CAPITOL
JEFFERSON CITY, MO 65102
1-888-ASK-MODOT (1-888-275-6636)

IF A SEAL IS PRESENT ON THIS SHEET IT HAS BEEN ELECTRONICALLY SEALED AND DATED.

Detailed
Checked

Note: This drawing is not to scale. Follow dimensions. Sheet No. of