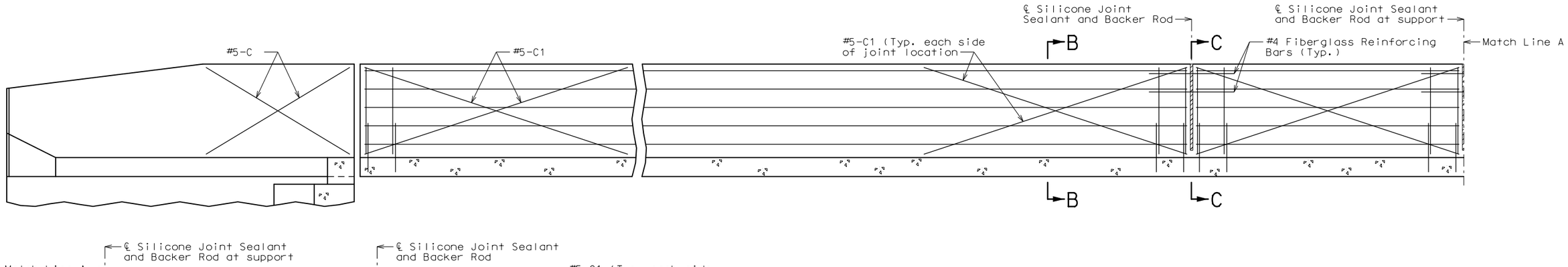

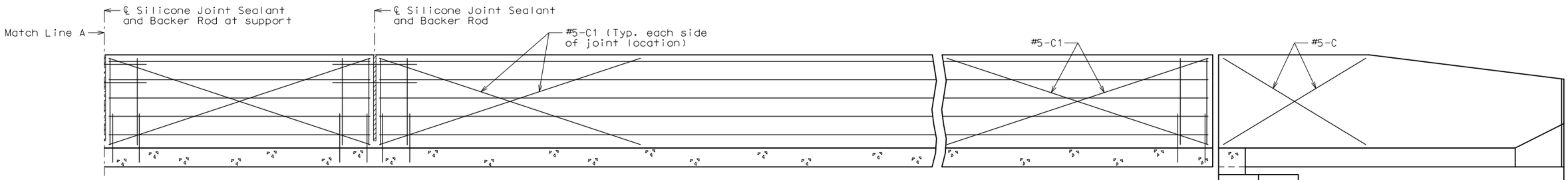

TYPICAL ELEVATION OF BARRIER CURB (TYPE D) AT SUPPORT LOCATIONS

Standard Drawing Guidance (do not show on plans):

In each span, the length of the C bars is based on the shortest distance between the joints for that span. Modify details if lengths vary by span.

The length of the C bars above the wings shall provide 1 1/2" clearance to the joint at the end bent and 1 1/2" clearance to the start of the transition for the guard rail attachment. A series of cross bracing C bars shall be used if required to limit the length of the C bars to 12 feet.

List C bars in the Bill of Reinforcing Steel and note that bars are for the slip-form option only.

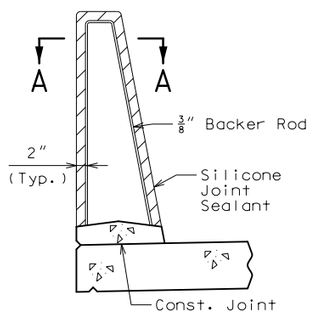

SECTION THRU JOINT

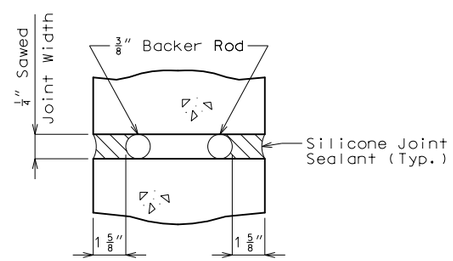

SECTION A-A

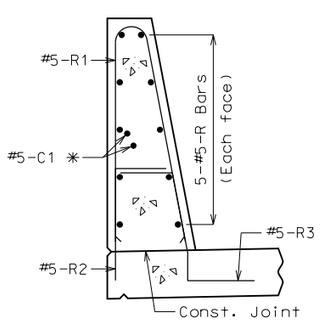

SECTION B-B

✳ Each side of joint location.

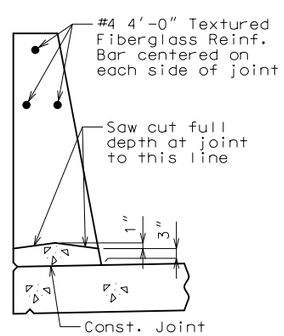

SECTION C-C

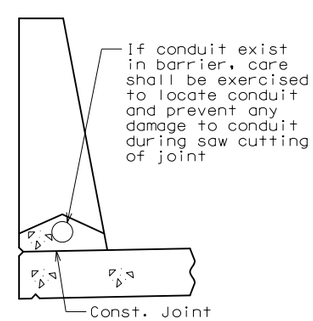

SECTION C-C

(Use when conduit required)

General Notes:

Top of barrier curb (Type D) shall be built parallel to grade with barrier curb joints (except at end bents) normal to grade.

All exposed edges of barrier curb (Type D) shall have either a 1/2-inch radius or a 3/8-inch bevel, unless otherwise noted.

Payment for all concrete and reinforcement, complete in place, will be considered completely covered by the contract unit price for Barrier Curb (Type D) per linear foot.

Concrete in the barrier curb (Type D) shall be Class B-1.

Measurement of barrier curb (Type D) is to the nearest linear foot for each structure, measured along the outside top of slab from end of wing to end of wing.

Concrete traffic barrier delineators shall be placed on top of the safety barrier curb as shown on Missouri Standard Plans 617.10 and in accordance with Sec 617. Delineators on bridges with two-lane, two-way traffic shall have retroreflective sheeting on both sides. Concrete traffic barrier delineators will be considered completely covered by the contract unit price for Barrier Curb (Type D).

Joint sealant and backer rods shall be used on all slip-form barrier curbs instead of joint filler and shall be in accordance with Sec 717 for silicone joint sealant for saw cut and formed joints.

Plastic waterstop shall not be used with slip-form option.

For slip-form option, all sides of the safety barrier curb shall have a vertically broomed finish and the curb top shall have a transversely broomed finish.

C bars (slip-form option only) shall be used in addition to cast-in-place conventional forming reinforcement for bridge barrier curb (Type D).

Cost of silicone joint sealant and backer rod, complete in place, will be considered completely covered by the contract unit price for Barrier Curb (Type D).

"THIS MEDIA SHOULD NOT BE CONSIDERED A CERTIFIED DOCUMENT."

DATE PREPARED	
5/10/2016	
ROUTE ✳	STATE MO
DISTRICT BR	SHEET NO. ✳
COUNTY ✳	
JOB NO. ✳	
CONTRACT ID.	
PROJECT NO.	
BRIDGE NO. BAC 20	

DATE	DESCRIPTION

MISSOURI HIGHWAYS AND TRANSPORTATION COMMISSION

105 WEST CAPITOL
JEFFERSON CITY, MO 65102
1-888-ASK-MODOT (1-888-275-6636)

IF A SEAL IS PRESENT ON THIS SHEET IT HAS BEEN ELECTRONICALLY SEALED AND DATED.

OPTIONAL SLIP-FORM BARRIER CURB (TYPE D)

Detailed
Checked

Note: This drawing is not to scale. Follow dimensions.

Sheet No. of