Standard Drawing Guidance (do not show on plans):

See Structural Project Manager or Liaison for preference on revising details as follows to specify staged construction.

① Show and call out any required staged construction joints.

Staged Const. Jt.

② Show any required construction joints and show and call out any mechanical bar splices.

Mechanical Bar Splice (Typ.)

③ When mechanical bar splices are required due to stage construction, append the indicated note with the following:

(Estimated ___ splices per slab)

Input the estimated number of required mechanical bar splices including those in the sleeper slab.

BAS01_la_i Effective: June 2014 Supercedes: Sept. 2011

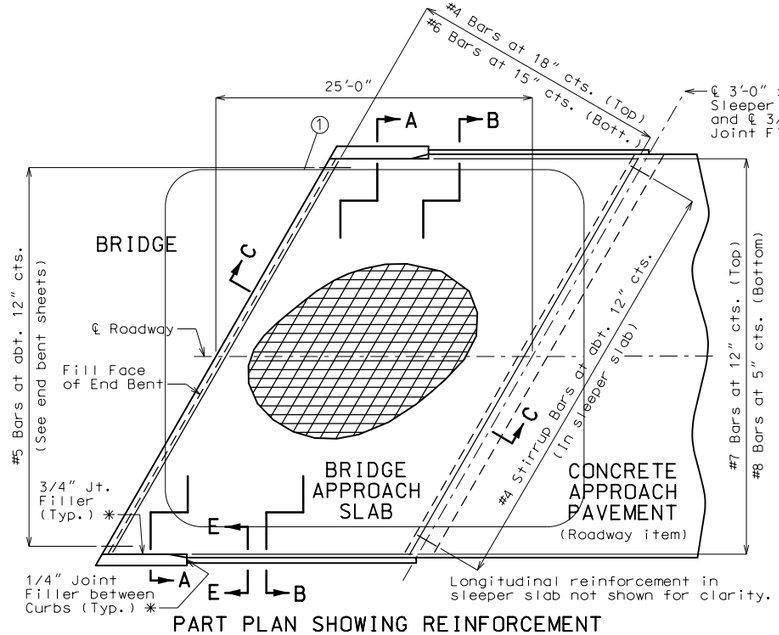

PART PLAN SHOWING REINFORCEMENT

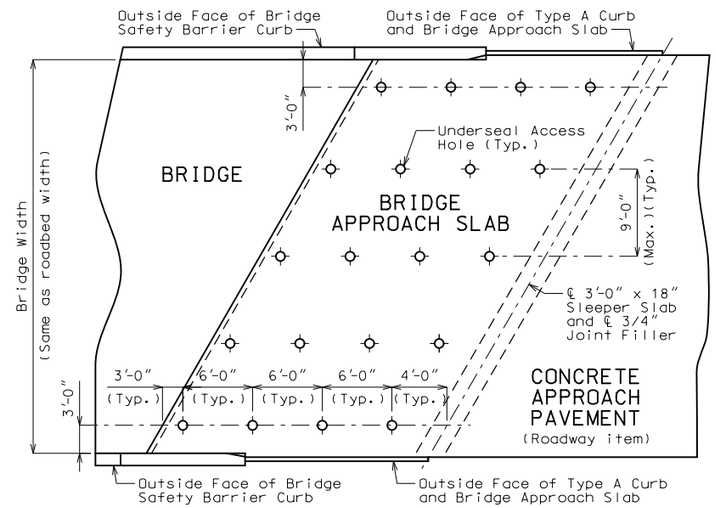

PART PLAN SHOWING UNDERSEAL ACCESS HOLES

General Notes:

All concrete for the bridge approach slab and sleeper slab shall be in accordance with Sec 503 (f'c = 4,000 psi).

All joint filler shall be in accordance with Sec 1057 for preformed fiber expansion joint filler, except as noted.

The reinforcing steel in the bridge approach slab and the sleeper slab shall be epoxy coated Grade 60 with Fy = 60,000 psi.

Minimum clearance to reinforcing steel shall be 1 1/2", unless otherwise shown.

The reinforcing steel in the bridge approach slab and the sleeper slab shall be continuous. The transverse reinforcing steel may be made continuous by lap splicing the #4 & #6 bars 18" and 2'-2", respectively.

Mechanical bar splices shall be in accordance with Sec 710.

Hooks and bends shall be in accordance with the CRSI Manual of Standard Practice for Detailing Reinforced Concrete Structures, Stirrup and Tie Dimensions. ③

The contractor shall pour and satisfactorily finish the bridge or semi-deep slab before pouring the bridge approach slabs.

Longitudinal construction joints in approach slab and sleeper slab shall be aligned with longitudinal construction joints in bridge or semi-deep slab.

Payment for furnishing all materials, labor and excavation necessary to construct the approach slab, including the timber header, sleeper slab, underdrain, Type 5 aggregate base, joint filler and all other appurtenances and incidental work as shown on this sheet, complete in place, will be considered completely covered by the contract unit price for Bridge Approach Slab (Bridge) per square yard.

For Concrete Approach Pavement details, see roadway plans.

See Missouri Standard Plans Drawing 609.00 for details of Type A Curb.

At the contractor's option, Grade 40 reinforcement may be substituted for the Grade 60 #5 dowel bars connecting the bridge approach slab to the bridge abutment. No additional payment will be made for this substitution.

When Grade 40 reinforcement is substituted for the Grade 60 #5 dowel bars connecting the bridge approach slab to the bridge abutment, the reinforcement may be bent up to 90 degrees with a 2" minimum radius near the abutment to allow compaction of the backfill material near the abutment. Damage to epoxy coating shall be repaired in accordance with Sec 710.

Drain pipe may be either 6" diameter corrugated metallic-coated pipe underdrain, 4" diameter corrugated polyvinyl chloride (PVC) drain pipe, or 4" diameter corrugated polyethylene (PE) drain pipe.

✱ Seal joint between vertical face of approach slab and wing with "Silicone Joint Sealant for Saw Cut and Formed Joints" in accordance with Sec 717.

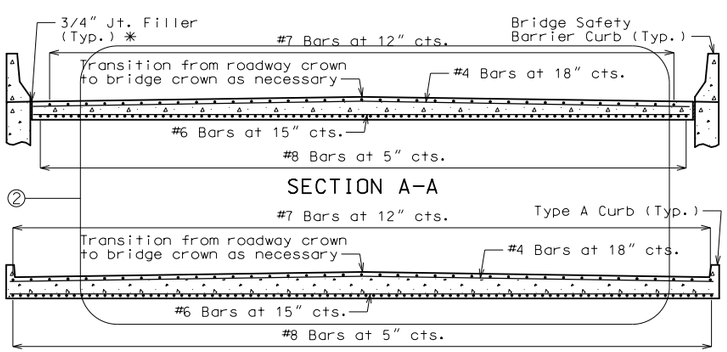

With the approval of the engineer, the contractor may crown the bottom of the approach slab to match the crown of the roadway surface.

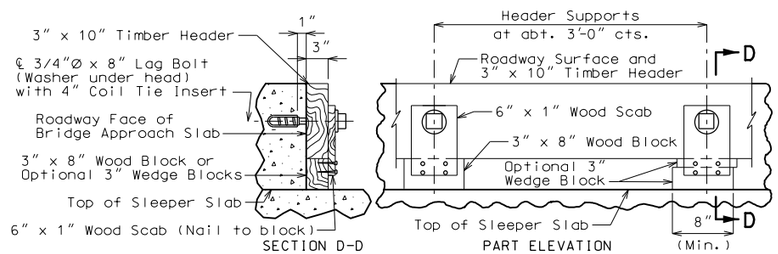

DETAILS OF TIMBER HEADER

Remove timber header when concrete pavement is placed.

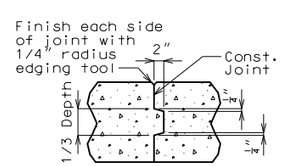

CONST. JOINT DETAIL

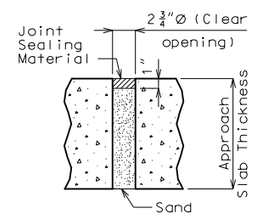

TYPICAL UNDERSEAL ACCESS HOLE DETAIL

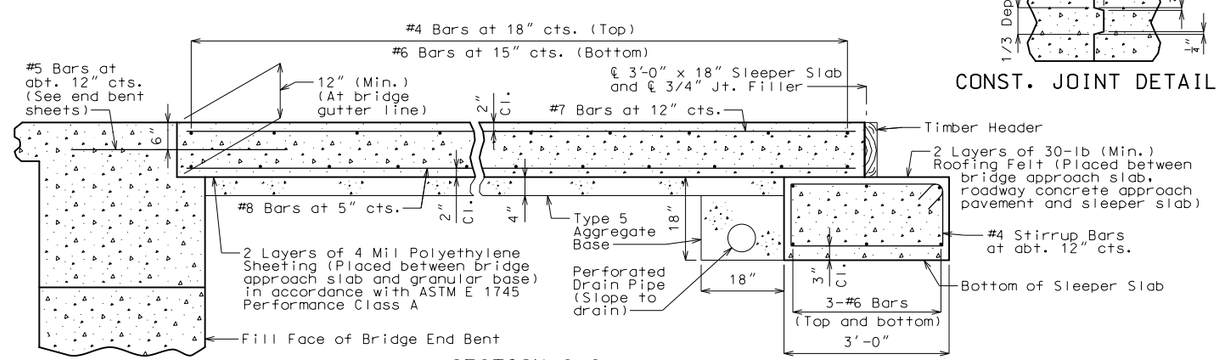

SECTION C-C

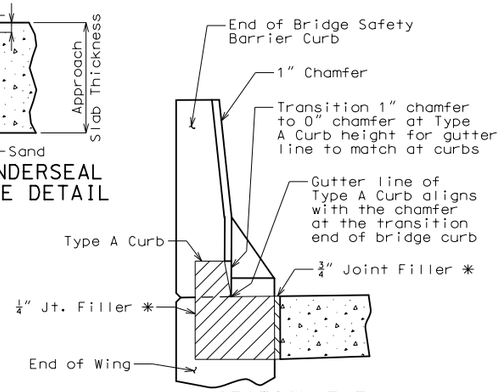

SECTION E-E

(Between curbs)

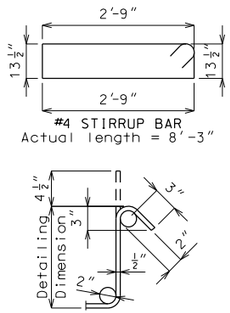

BENDING DIAGRAMS

Nominal lengths are based on out to out dimensions shown in bending diagram and are listed for fabricators use (nearest inch).

BRIDGE APPROACH SLAB

Detailed
Checked

Note: This drawing is not to scale. Follow dimensions.

Sheet No. of

"THIS MEDIA SHOULD NOT BE CONSIDERED A CERTIFIED DOCUMENT."

DATE PREPARED	
7/9/2014	
ROUTE	STATE
✱	MO
DISTRICT	SHEET NO.
BR	✱
COUNTY	
✱	
JOB NO.	
✱	
CONTRACT ID.	
PROJECT NO.	
BRIDGE NO.	
BAS 1	

DESCRIPTION	DATE

IF A SEAL IS PRESENT ON THIS SHEET IT HAS BEEN ELECTRONICALLY SEALED AND DATED.

MISSOURI HIGHWAYS AND TRANSPORTATION COMMISSION

105 WEST CAPITOL
JEFFERSON CITY, MO 65102
1-888-ASK-MODOT (1-888-275-6636)

xBAS01_la_i.dgn 12:27:25 PM 7/9/2014