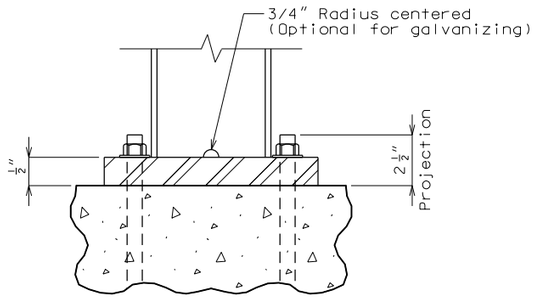

DETAIL B

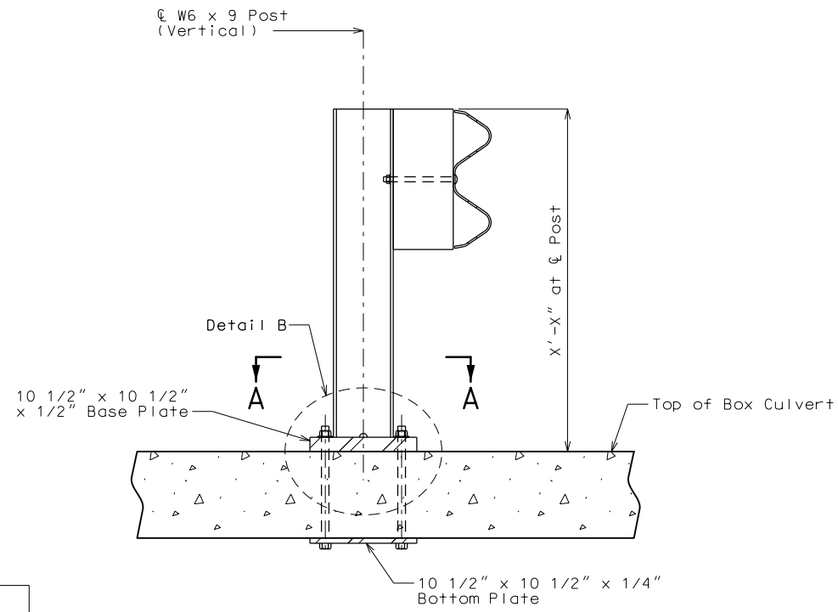

PART SECTION AT RAIL POST

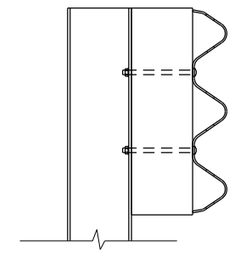

THRIE BEAM
OPTION

Standard Drawing Guidance (do not show on plans):

- Designed for AASHTO LFD.
- Not designed for AASHTO LRFD.
- Not crash tested.
- Comparable to TL-2 (NCHRP 350) deck-mounted (top) post and rail system: Texas T101, Texas Type 6.

Unchecked LRFD analysis shows:

- 0' Fill
  - Guardrail (W-Beam): Design Requirements for TL-2
    - 5'-0" post spacing max
    - Single Rail
    - Grade 50 post and plate
  - Thrie-Beam: Design Requirements for TL-2
    - 6'-9" post spacing max
    - Single Rail
    - Grade 50 post and Plate
- 2' Fill
  - Guardrail (W-Beam): Design Requirements for TL-2
    - 4'-0" post spacing max
    - Double Nested
    - Grade 50 post and plate
  - Thrie-Beam: Design Requirements for TL-2
    - 6'-0" post spacing max
    - Double Nested
    - Grade 50 post and Plate

Use this detail when required to connect rail post to culvert slabs greater than 9" thick or where culvert walls interfere with bolting through slab.

This sheet shows details for connecting guardrail post to culvert slab only.

Work with districts on type of guardrail required.

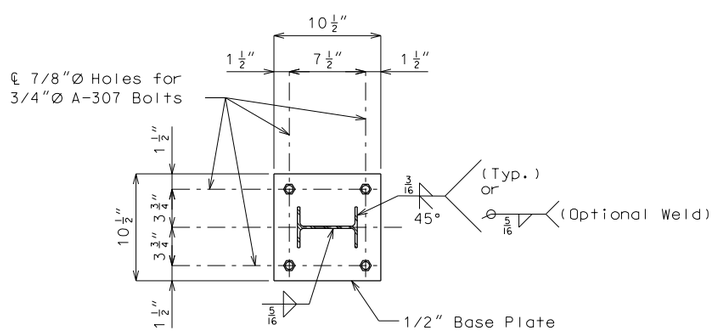

SECTION A-A

General Notes:

Furnishing and installing posts and guardrail on culvert as shown on this sheet will be considered completely covered by the contract unit price for Bridge Guardrail (W-Beam) Bridge Guardrail (Thrie Beam) other items.

Furnishing and installing posts and guardrail on culvert shall be in accordance with Sec 606 except as shown.

Rail posts shall be seated on elastomeric pads having the same dimensions as the post base plate and 1/16" thickness. Such pads may be any elastomeric material, plain or fibered, having a hardness (Durometer) of 50 or above, as certified by the manufacturer. Additional pads or half pads may be used in shimming for alignment. Post heights shown will increase by the thickness of the pad.

Posts and base plates shall be fabricated from ASTM A709 Grade 36 steel and galvanized.

Fabrication of structural steel shall be in accordance with Sec 1080.

Holes for anchor bolts may be drilled into the culvert.

Grade A321 threaded rods with 2 hex nuts and washers may be substituted for the A307 anchor bolts.

See slab sheet for rail post spacing.

See Missouri Standard Plans drawing 606.00 for details not shown.

"THIS MEDIA SHOULD NOT BE CONSIDERED A CERTIFIED DOCUMENT."

DATE PREPARED	6/11/2015
ROUTE	*
STATE	MO
DISTRICT	BR
SHEET NO.	*
COUNTY	*
JOB NO.	*
CONTRACT ID.	
PROJECT NO.	
BRIDGE NO.	BOX 14

DESCRIPTION	DATE

MISSOURI HIGHWAYS AND TRANSPORTATION COMMISSION
105 WEST CAPITOL
JEFFERSON CITY, MO 65102
1-888-ASK-MODOT (1-888-275-6636)

IF A SEAL IS PRESENT ON THIS SHEET IT HAS BEEN ELECTRONICALLY SEALED AND DATED.

Detailed
Checked

Note: This drawing is not to scale. Follow dimensions.

Sheet No. of