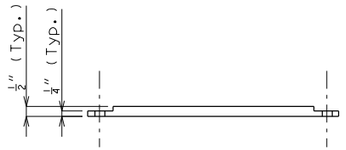


ELEVATION OF GALVANIZED STEEL STOPPER PLATE

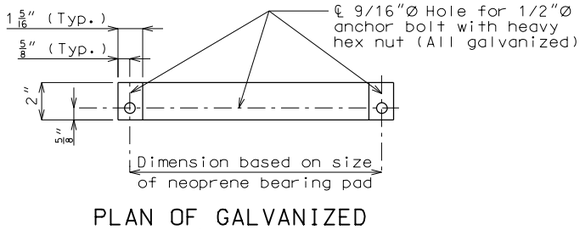


PLAN OF GALVANIZED STEEL STOPPER PLATE

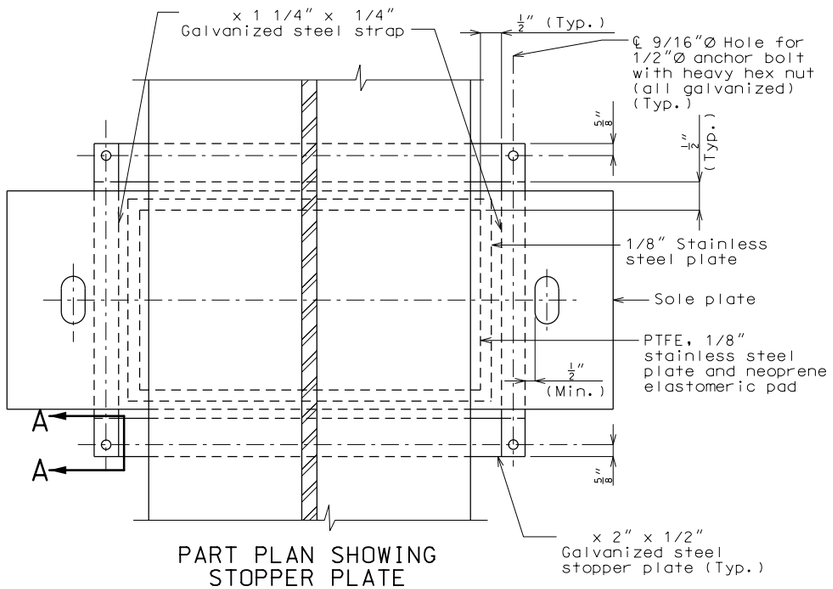


PART PLAN SHOWING STOPPER PLATE

Stopper plates and straps shall be provided to prevent loss of support due to creeping of PTFE bearings. Payment for fabricating and installing the stopper plates and straps will be considered completely covered by the contract unit price for Type N PTFE Bearing.

The bottom face of the 1/8" stainless steel plate that is welded to the sole plate shall be lubricated with a lubricant that is approved by the bearing manufacturer.

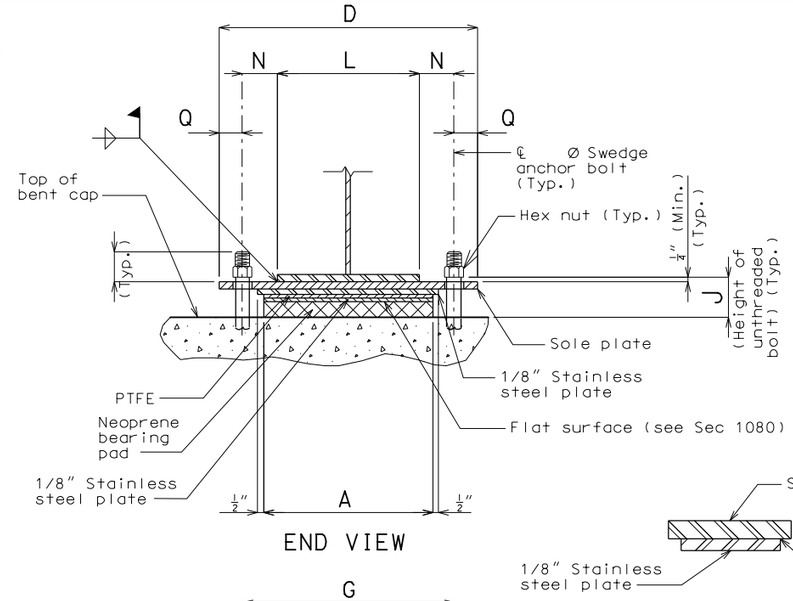


END VIEW

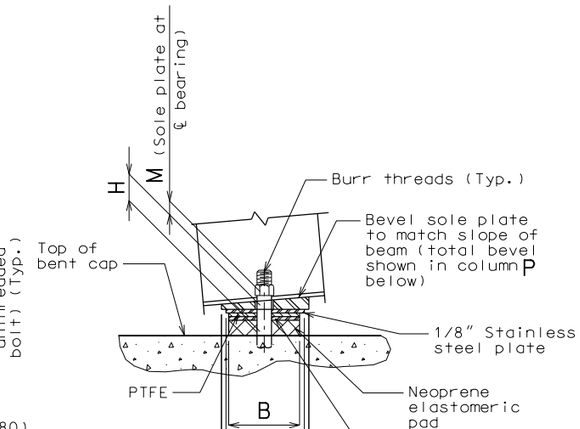


SIDE VIEW

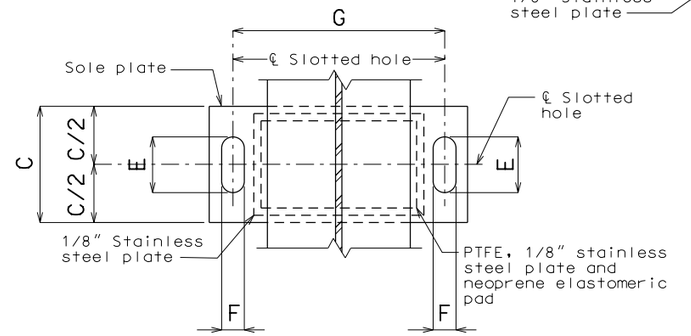


PART PLAN

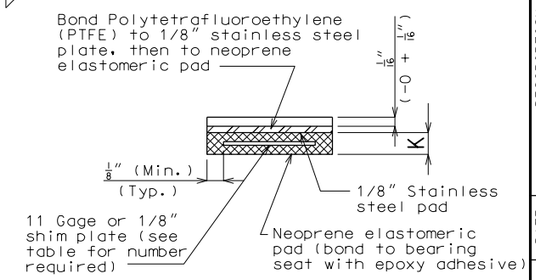


NEOPRENE ELASTOMERIC PAD

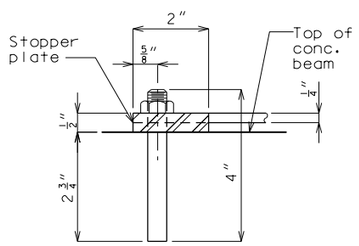


SECTION A-A

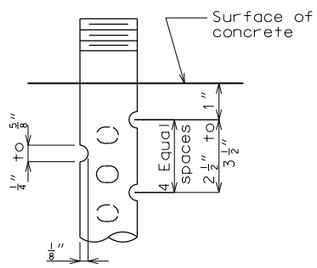


DETAIL FOR 3/4"Ø THRU 2 1/2"Ø ANCHOR BOLTS

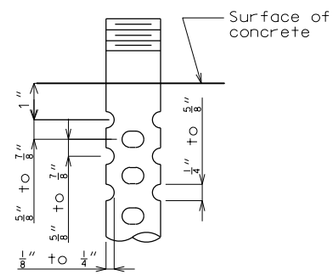


OPTIONAL DETAIL FOR 1 3/8"Ø THRU 2 1/2"Ø ANCHOR BOLTS

SWEDGE ANCHOR BOLT DETAILS

Standard Drawing Guidance:
(do not show on plans.)

① Use note H3.29 or H3.29.1.
Check with Structural Project Manager.
H3.29 is shown.

## GENERAL NOTES:

Design coefficient of friction equals 0.06.

Anchor bolts shall be Ø ASTM F1554 Grade 55 swedged bolts and shall extend into the concrete with ASTM A563 Grade A Hex or Heavy Hex nuts. Actual manufacturer's certified mill test reports (chemical and mechanical) shall be provided. Swedging shall be 1" less than extension into the concrete.

Anchor bolts shall be at the ℄ of slotted hole at 60°F. Bearing position shall be adjusted R for each 10° fall or rise in temperature at installation.

All structural steel for the anchor bolts and heavy hexagon nuts shall be coated with a minimum of two coats of inorganic zinc primer (5 mils minimum).

Neoprene Elastomeric Pads shall be 70 Durometer.

① Structural steel for sole plate shall be ASTM A709 Grade and shall be coated with a minimum of two coats of inorganic zinc primer (5 mils minimum). The stainless steel plate shall be protected from any coating.

Type N PTFE Bearings shall be in accordance with Sec 716.

PTFE surface shall be fabricated as a single piece. Splicing will not be permitted.

| PTFE SLIDING BEARINGS | | | | | | | | | | | | | | | | | | |
|---|---|---|---|---|---|---|---|---|---|---|---|---|---|---|---|---|---|---|
| BENT NO. | A | B | C | D | E | F | G | H | J | K | L | M | N | P | Q | R | NUMBER OF SHIM PLATES ✳ | NUMBER REQUIRED |
| | | | | | | | | | | | | | | | | | | |
| | | | | | | | | | | | | | | | | | | |
| | | | | | | | | | | | | | | | | | | |
| | | | | | | | | | | | | | | | | | | |
| | | | | | | | | | | | | | | | | | TOTAL BEARINGS | |

✳ The required shim plate shall be placed between layers of elastomer and molded together to form an integral unit.

# DETAILS OF TYPE N PTFE BEARINGS

Detailed
Checked

Note: This drawing is not to scale. Follow dimensions.

Sheet No. of

"THIS MEDIA SHOULD NOT BE CONSIDERED A CERTIFIED DOCUMENT."

| DATE PREPARED | |
|---|---|
| 1/22/2016 | |
| ROUTE ✳ | STATE MO |
| DISTRICT BR | SHEET NO. ✳ |
| COUNTY ✳ | |
| JOB NO. ✳ | |
| CONTRACT ID. | |
| PROJECT NO. | |
| BRIDGE NO. BRG 7 | |

DESCRIPTION

DATE

MISSOURI HIGHWAYS AND TRANSPORTATION COMMISSION
105 WEST CAPITOL
JEFFERSON CITY, MO 65102
1-888-ASK-MODOT (1-888-275-6636)

IF A SEAL IS PRESENT ON THIS SHEET IT HAS BEEN ELECTRONICALLY SEALED AND DATED.