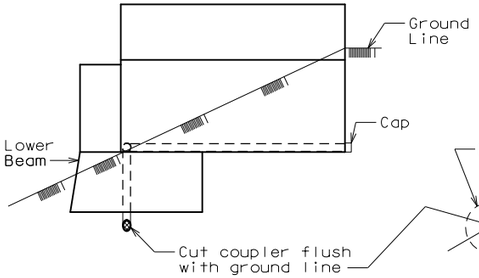

ELEVATION OF WING

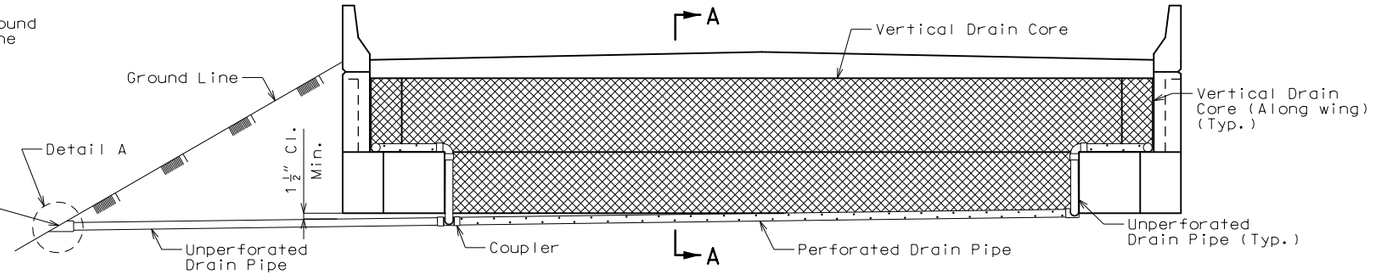

ELEVATION OF END BENT

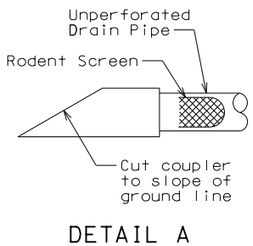

DETAIL A

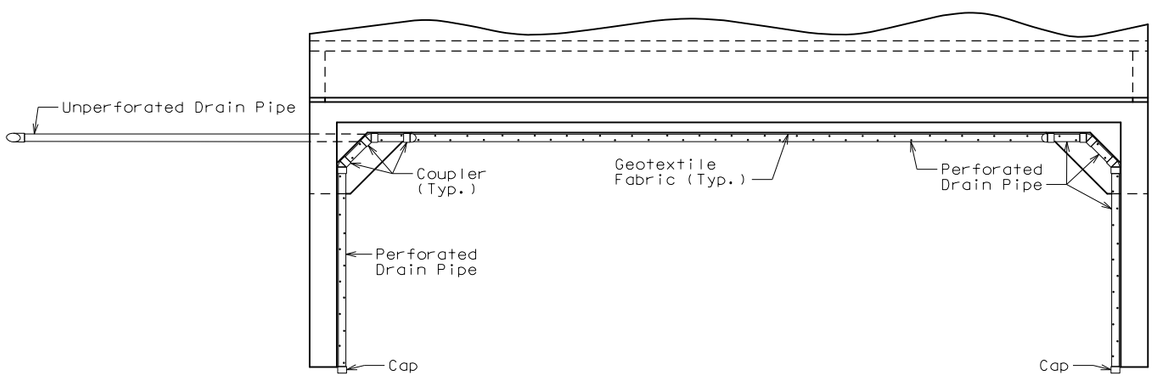

PLAN OF END BENT

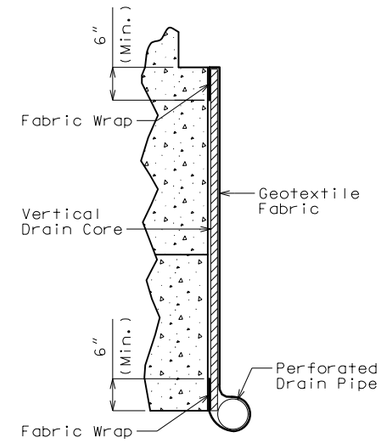

PART SECTION A-A
(Section thru wing similar)

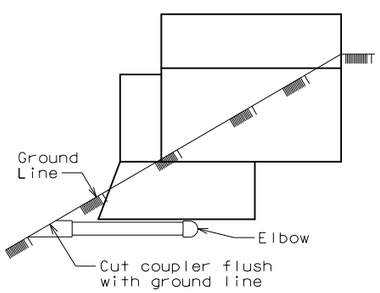

ELEVATION OF WING

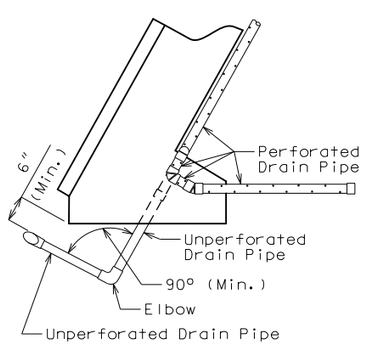

PART PLAN

OPTIONAL TURNED DRAIN
(Only if rock is encountered outside of wing)

Standard Drawing Guidance (do not show on plans):

Remove details that do not apply.

Revising for skewed end bent is not necessary nor required unless unusual details of drainage need to be shown.

If the drain pipe discharges onto soil, front or side slope (Case 3 and 4 of Standard Plan 609.40), and discharges at greater then 20 feet above the toe of slope, then the possible erosion of the slope should be considered and prevention coordinated with the district.

Possible solutions:

A. Provide a drain flume consistent with 609.40.

B. Extend the drain to the toe of slope using the following note (or similar) added to the general notes:

The unperforated drain pipe shall be extended parallel to the slope at a depth of 30 inches until the drain discharges onto rock blanket or the ditch flowline.

C. Add a detail showing the drain extension.

General Notes:

All drain pipe shall be sloped 1 to 2 percent.

Drain pipe may be either 6-inch diameter corrugated metallic-coated steel pipe underdrain, 4-inch diameter corrugated polyvinyl chloride (PVC) drain pipe, or 4-inch diameter corrugated polyethylene (PE) drain pipe.

Drain pipe shall be placed at fill face of end bent and inside face of wings. The pipe shall slope to lowest grade of ground line, also missing the lower beam of end bent by a minimum of 1 1/2 inches.

Perforated pipe shall be placed at fill face side and inside face of wings at the bottom of end bent and plain pipe shall be used where the vertical drain ends to the exit at ground line.

VERTICAL DRAIN AT END BENTS
(Squared end bent shown, skewed end bent similar)

"THIS MEDIA SHOULD NOT BE CONSIDERED A CERTIFIED DOCUMENT."

DATE PREPARED	
8/18/2016	
ROUTE	STATE
*	MO
DISTRICT	SHEET NO.
BR	*
COUNTY	
*	
JOB NO.	
*	
CONTRACT ID.	
PROJECT NO.	
BRIDGE NO.	
DRAIN02	

DATE	DESCRIPTION

MISSOURI HIGHWAYS AND TRANSPORTATION COMMISSION
105 WEST CAPITOL
JEFFERSON CITY, MO 65102
1-888-ASK-MODOT (1-888-275-6636)

IF A SEAL IS PRESENT ON THIS SHEET IT HAS BEEN ELECTRONICALLY SEALED AND DATED.

Detailed
Checked

Note: This drawing is not to scale. Follow dimensions.

Sheet No. of