Standard Drawing Guidance (do not show on plans):

Replace example Elevation of Median Barrier Curb (Type C) with actual elavtion showing:
- Joint location and spacing
- The horizontal #5-M bars in each span specified by bar mark
- Number of vertical #5-M bars along the entire length of the barrier
- Span ranges

Adjust longitudinal dimensions note under elevation title as necessary.

Do not include #5-M11 bars in the bar bill.

EXAMPLE (Replace with actual elevation)

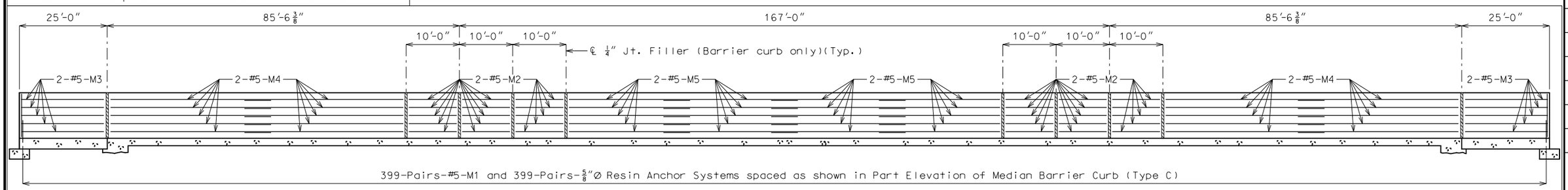

ELEVATION OF MEDIAN BARRIER CURB (TYPE C)

Longitudinal dimensions are horizontal.

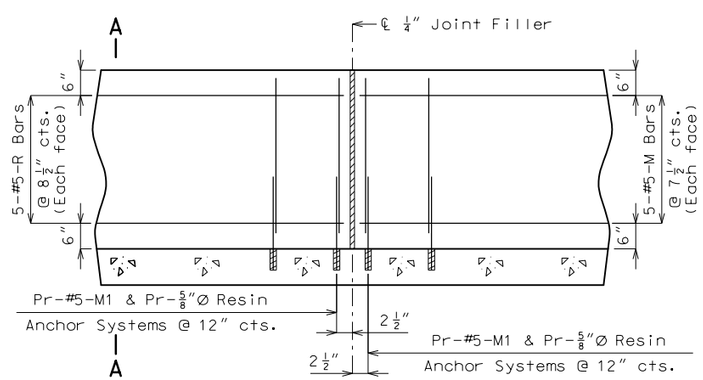

PART ELEVATION OF MEDIAN BARRIER CURB (TYPE C) (CAST-IN-PLACE CONVENTIONAL FORMING)

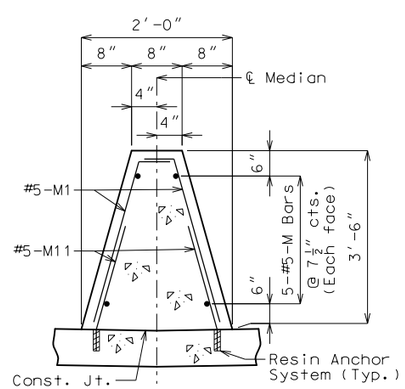

SECTION A-A

Use a minimum lap of 3'-1" for #5 horizontal median barrier curb (Type C) bars.

The cross-sectional area above the slab = 4.69 sq. ft.

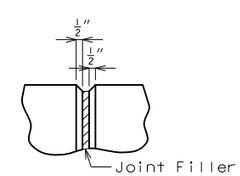

FILLED JOINT DETAIL

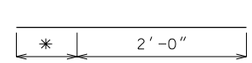

#5-M11
(XX required)

* Manufacturer's Embedment Length (5" minimum)

General Notes

Top of median barrier curb (Type C) shall be built parallel to grade with barrier curb joints (except at end bents) normal to grade.

All exposed edges of median barrier curb (Type C) shall have either a 1/2-inch radius or a 3/8-inch bevel, unless otherwise noted.

Payment for all concrete and reinforcement, complete in place, will be completely covered by the contract unit price for Median Barrier Curb (Type C) per linear foot.

Concrete in the median barrier curb (Type C) shall be Class B-1.

Measurement of median barrier curb (Type C) is to the nearest linear foot for each structure, measured along the top of slab at centerline median from centerline sleeper slab to centerline sleeper slab.

Concrete traffic barrier delineators shall be placed on top of the median barrier curb (Type C) as shown on Missouri Standard Plans 617.10 and in accordance with Sec 617. Delineators on bridges with two-lane, two-way traffic shall have retroreflective sheeting on both sides. Concrete traffic barrier delineators will be considered completely covered by the contract unit price for Median Barrier Curb (Type C).

The contractor shall use one of the qualified resin anchor systems in accordance with 1039.

Cost of furnishing and installing the resin anchor system, complete in place, will be considered completely covered by the contract unit price for Median Barrier Curb (Type C).

The minimum embedment depth in concrete with f'c = 4,000 psi for the resin anchor system shall be that required to meet the minimum ultimate pullout strength in accordance with Sec 1039 but shall not be less than 5".

An epoxy coated #5-M11 Grade 60 reinforcing bar shall be substituted for the 5/8"Ø threaded rod.

DETAILS OF MEDIAN BARRIER CURB (TYPE C)

Detailed
Checked

Note: This drawing is not to scale. Follow dimensions.

Sheet No. of

"THIS MEDIA SHOULD NOT BE CONSIDERED A CERTIFIED DOCUMENT."

DATE PREPARED	
3/17/2016	
ROUTE	STATE
*	MO
DISTRICT	SHEET NO.
BR	*
COUNTY	
*	
JOB NO.	
*	
CONTRACT ID.	
PROJECT NO.	
BRIDGE NO.	
MBAC 3	

DESCRIPTION	DATE

MISSOURI HIGHWAYS AND TRANSPORTATION COMMISSION
105 WEST CAPITOL
JEFFERSON CITY, MO 65102
1-888-ASK-MODOT (1-888-275-6636)

IF A SEAL IS PRESENT ON THIS SHEET IT HAS BEEN ELECTRONICALLY SEALED AND DATED.