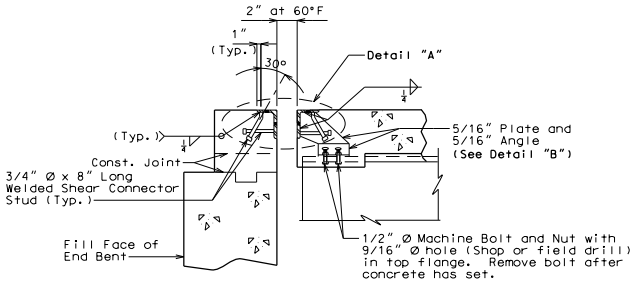

PART SECTION A-A

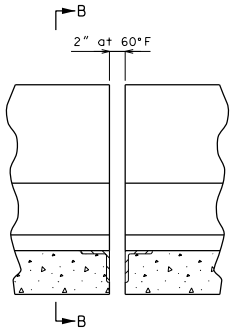

PART ELEVATION OF BARRIER CURB

GENERAL NOTES:

Expansion joint system shall be fabricated in one section, except for stage construction and when the length is over 50 feet. A complete joint penetration groove welded splice shall be required. Welds shall be ground flush to provide a smooth surface. The expansion joint system shall be fabricated and installed to the crown and grade of the roadway.

Plan dimensions are based on installation at 60°F. The expansion gap and other dimension shall be increased or decreased ___ for ① each 10° fall or rise in temperature at installation.

Structural steel for the expansion joint system shall be ASTM A709 Grade 36. Anchors for the expansion joint system shall be in accordance with Sec 1037. Silicone Expansion Joint Sealant Systems shall be in accordance with Sec 717.

Structural steel for the expansion joint system shall be coated with a minimum of two coats of inorganic zinc primer (5 mils minimum) or galvanized in accordance with ASTM A123. Anchors need not be protected from overspray.

Concrete shall be forced under armor angle and around anchors. Proper consolidation of the concrete shall be achieved by localized internal vibration.

Longitudinal reinforcing steel shall be placed so that ends shall not be more than ±1" from vertical leg of angle at the expansion joint system.

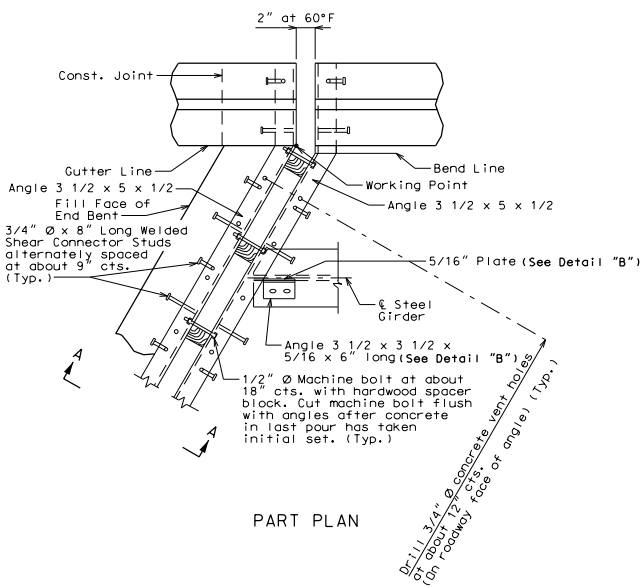

PART PLAN

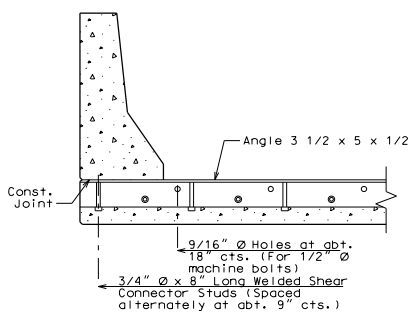

PART SECTION B-B

STANDARD DRAWING GUIDANCE (do not show on plans):

For slab thickness < 8 1/2", check shear connector stud length for clearance to flange or diaphragm and adjust length as necessary. See Structural Project Manager.

① Installation gap temperature adjustment normal to the joint.

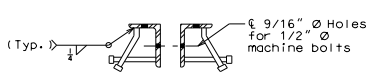

DETAIL "A"

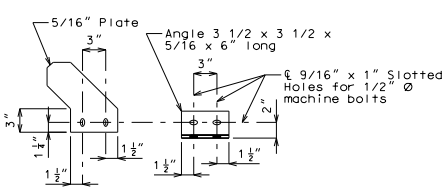

DETAIL "B"

DETAILS OF SILICONE EXPANSION JOINT SEALANT SYSTEM AT END BENT NO.

Note: This drawing is not to scale. Follow dimensions.

Sheet No. of

Detailed
Checked

"THIS MEDIA SHOULD NOT BE CONSIDERED A CERTIFIED DOCUMENT."

DATE PREPARED	
9/15/2011	
ROUTE	STATE
*	MO
DISTRICT	SHEET NO.
BR	*
COUNTY	
*	
JOB NO.	
*	
CONTRACT ID.	
PROJECT NO.	
BRIDGE NO.	
SEJS 3	

DESCRIPTION

DATE

MISSOURI HIGHWAYS AND TRANSPORTATION COMMISSION

105 WEST CAPITOL
JEFFERSON CITY, MO 65102
1-888-ASK-MODOT (1-888-275-6636)

IF A SEAL IS PRESENT ON THIS SHEET IT HAS BEEN ELECTRONICALLY SEALED AND DATED.