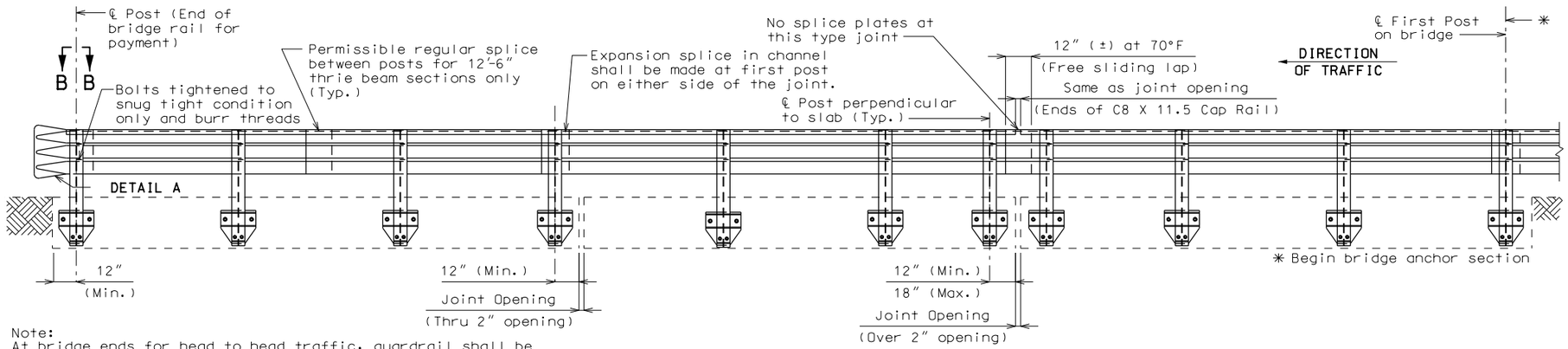

Note:
At bridge ends for head to head traffic, guardrail shall be used at all four corners and for single directional traffic, guardrail shall be used at entrance ends only unless required at the exit.

PART ELEVATION SHOWING THRIE BEAM RAIL

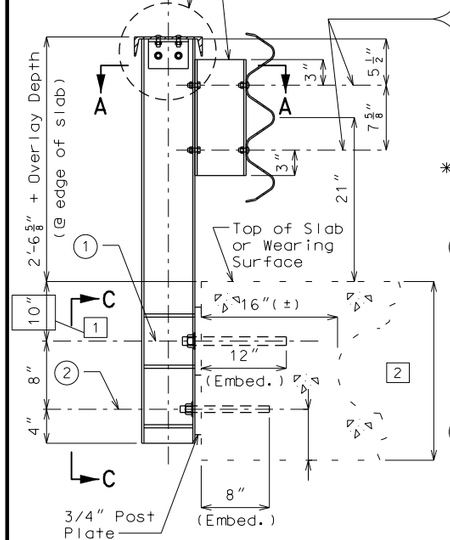

Blockout-to-Post Conn.
℄ 2 Holes 13/16"Ø in W6 x 20 Post Flange and W6 x 15 Blockout flange
℄ 2 Hex Head Bolt 5/8"Ø with two washers and hex nut in W6 x 20 Post flange

Thrie Beam-to-Blockout Conn.
℄ 13/16" x 2 1/2" Vertical Slotted Hole in W6 x 15 Blockout flange ✳✳
℄ 5/8"Ø Carriage Bolt with one flat washer and hex nut

✳✳ Required on one side of web only, but may be provided on both sides of web at the contractor's option.

(1) 2 Resin Anchor Systems that shall have a minimum ultimate pullout strength (each) of 72 kip in concrete with f'c = 4,000 psi to include:
2 Drilled Holes 1 1/8"Ø (min.) in slab or as recommended by manufacturer
2 Holes 1 1/4"Ø in Post Plate
2 Threaded Rods 1"Ø A449 H.S. snug tight 12" embedment in slab
2 Hardened Locking Washers 2 1/2"Ø
2 Hex Nuts

(2) 2 Resin Anchor Systems that shall have a minimum ultimate pullout strength (each) of 20.4 kip in concrete with f'c = 4,000 psi to include:
2 Drilled Holes 7/8"Ø (min.) in slab or as recommended by manufacturer
2 Holes 1"Ø in post plate and post flange
2 Threaded Rods 3/4"Ø A449 H.S. snug tight 8" embedment in slab
2 Hardened Locking Washers
2 Hex Nuts

PART SECTION AT RAIL POST

Note: For Part Elevation C-C see Sheet No. .

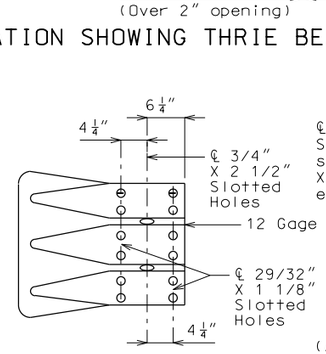

ELEVATION

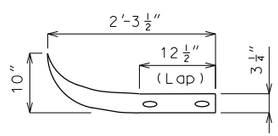

PLAN

DETAIL A

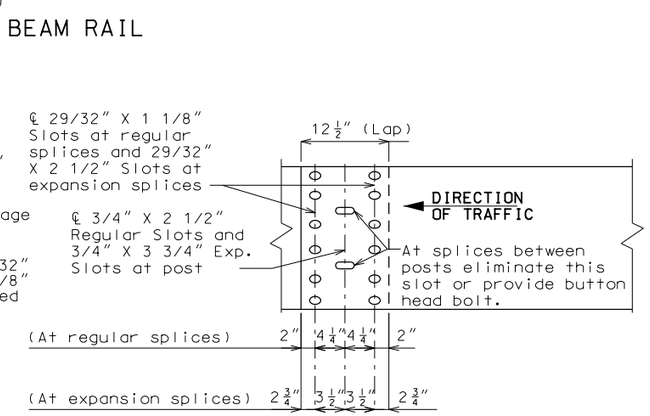

THRIE BEAM RAIL SPLICE DETAILS

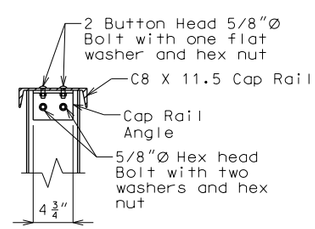

DETAIL B

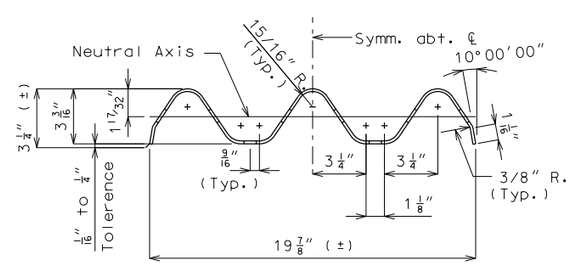

SECTION THRU THRIE BEAM RAIL

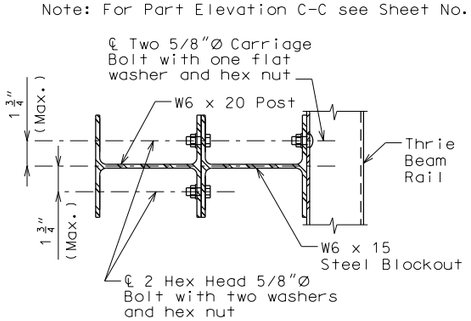

SECTION A-A

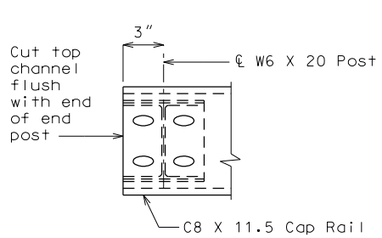

PART PLAN B-B

Standard Drawing Guidance (do not show on plans):

Design weight of (12 gage) Thrie Beam Bridge Rail = 35#/lin. ft.

[1] ✳✳ Use 10" from top of original slab (before any future wearing surface). For 20" voided slabs reduce to 8", see Structural Project Manager.

[2] 22" Design Min. thru 31" Design Max. voided slab. 10" for 22" thru 31" voided slab and 8" for 20" voided Slab

GENERAL NOTES:

Design Specifications: 2002 - AASHTO 17th Edition

Guardrail delineators shall be attached to the top of the guardrail and shall similarly use the delineator details of Missouri Standard Plan 617.10, except that the delineator body shall be attached to the top of the cap rail using galvanized anchorage as shown on Missouri Standard Plan 606.00. Delineators on bridges with two-lane, two-way traffic shall have retroreflective sheeting on both sides. Guardrail delineators will be considered completely covered by the contract unit price for Bridge Guardrail (Thrie Beam).

Panel lengths of channel members shall be attached continuously to a minimum of four posts and a maximum of six posts (except at end bents).

All bolts, nuts, washers, and plates will be considered completely covered by the contract unit price for Bridge Guardrail (Thrie Beam).

All steel connecting bolts and fasteners for posts and railing, and all anchor bolts, nuts, washers and plates shall be galvanized after fabrication. Protective coating and material requirement of steel railing shall be in accordance with Sec 1040.

Rail posts shall be set perpendicular to roadway profile grade, vertically in cross section and aligned in accordance with Sec 713 except that the rail posts shall be aligned by the use of shims such that the post deviates not more than 1/2 inch from true horizontal alignment after final adjustment. The shims shall be 3" x 1 3/4" and placed between the blockout and the thrie beam rail. The thickness of the shims shall be determined by the contractor and verified by the engineer before ordering material for this work.

At the expansion slots in the thrie beam rails and channels, the bolts shall be tightened and backed off one-half turn and the threads shall be burred.

At the thrie beam connection to blockout on wings, the bolts shall be tightened and backed off one-half turn and the threads shall be burred.

Minimum length of thrie beam sections is equal to one post space.

5/8"Ø button-head, oval shoulder bolts with 3/8" min. thickness hex nuts shall be used at all slots.

Thrie beam guardrail on the bridge shall be 12 gage steel.

Posts, cap rail angles, post plates, channels and channel splice plates shall be fabricated from ASTM A709 Grade 36 steel and galvanized.

Washers shall be used at all post bolts between the bolt head and beam. The flat washers shall be rectangular in shape 3" x 1 3/4" x 3/16" minimum and with a 11/16" x 1" slot, or when necessary of such design as to fit the contour of the beam. A 3" x 1 3/4" x 5/8" rectangular washer shall be used between the blockout and the thrie beam rail.

Special drilling of the thrie beam may be required at the splices. All drilling details shall be shown on the shop drawings.

Fabrication of structural steel shall be in accordance with Sec 1080.

Expansion splices in the thrie beam rail shall be made at either the first or second post on either side of the joint and on structure at bridge ends. When the splice is made at the second post, an expansion slot shall be provided in the thrie beam rail for connection to the first post to allow for movement.

In addition to the expansion provisions at the expansion joints, expansion splices in the thrie beam rail and the channel shall be provided at other locations so that the maximum length without expansion provisions does not exceed 200 ft.

Contractor shall verify all dimensions in field before ordering materials.

Shim plates 6" x 6" x 1/16" may be used between the top of the post and the channel member as required for vertical alignment.

See slab sheet for rail post spacing.

See Missouri Standard Plans 606.00 for details not shown.

"THIS MEDIA SHOULD NOT BE CONSIDERED A CERTIFIED DOCUMENT."

DATE PREPARED	
4/30/2014	
ROUTE ✳	STATE MO
DISTRICT BR	SHEET NO. ✳
COUNTY ✳	
JOB NO. ✳	
CONTRACT ID.	
PROJECT NO.	
BRIDGE NO. THRIE 2A	

DATE	DESCRIPTION

MISSOURI HIGHWAYS AND TRANSPORTATION COMMISSION
105 WEST CAPITOL
JEFFERSON CITY, MO 65102
1-888-ASK-MODOT (1-888-275-6636)

IF A SEAL IS PRESENT ON THIS SHEET IT HAS BEEN ELECTRONICALLY SEALED AND DATED.

Designed
Detailed
Checked

Note: This drawing is not to scale. Follow dimensions.

Sheet No. of