Standard Drawing Guidance (do not show on plans):

① Modify as required.

TL-4 (NCHRP 350) bridge rail is typically used on spread box beam bridges and may be used on adjacent box beam bridges where reinforcement is embedded in the beam.

Use only in certain applications because of cost. Acceptable for use when roadway width or site distance is a concern. Curb shall be used to prevent drainage over deck.

TTR2 New: Feb. 2014

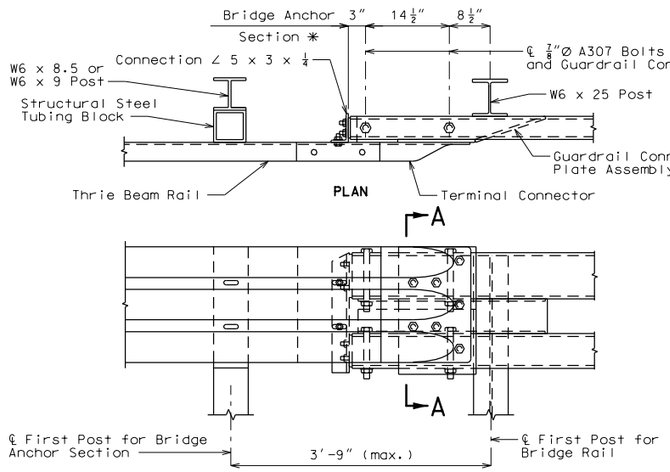

DETAIL A

(Part elevation of bridge anchor section)

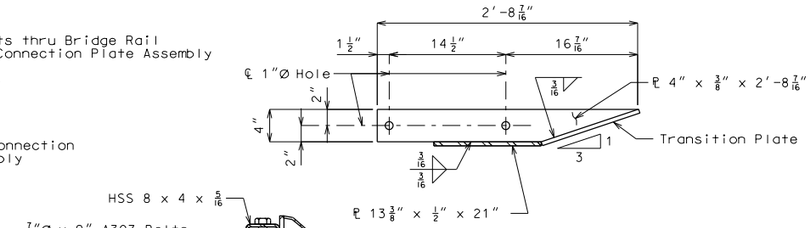

SECTION B-B

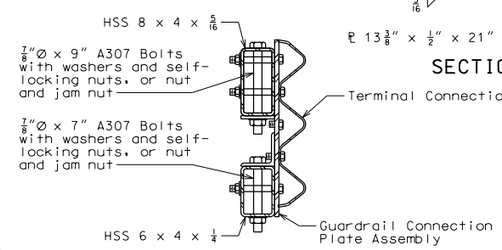

SECTION A-A

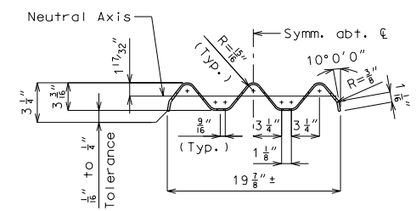

SECTION THRU THRIE BEAM RAIL

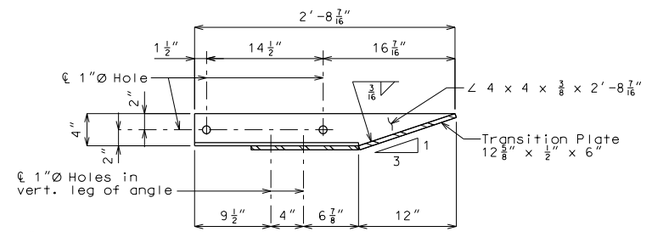

SECTION C-C

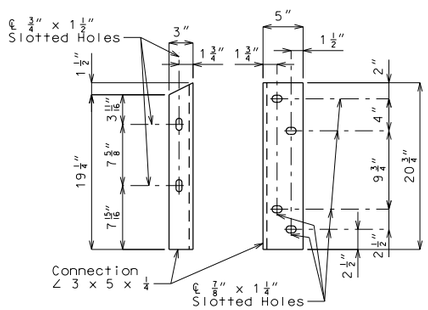

CONNECTION ANGLE DETAILS

Install angles to rail caps using 5/8"Ø washers and self-locking nuts, or nuts and jam nuts.

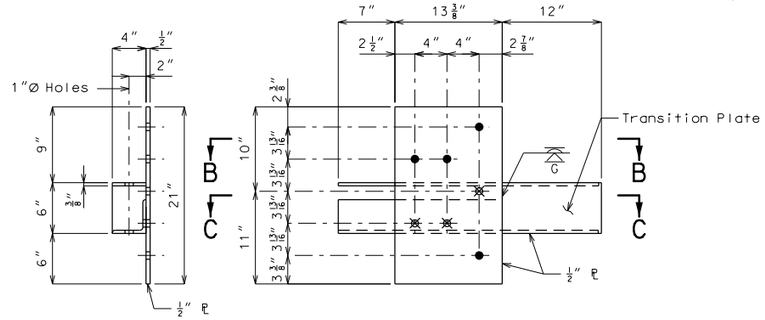

GUARDRAIL CONNECTION PLATE ASSEMBLY DETAILS

(Mirror for opposite end)

⊗ Drill and tap 3 holes for 7/8"Ø H.S. bolts

● 4-1"Ø Holes for 7/8"Ø H.S. bolts and nuts

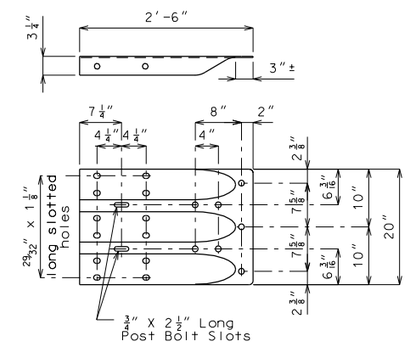

TERMINAL CONNECTOR

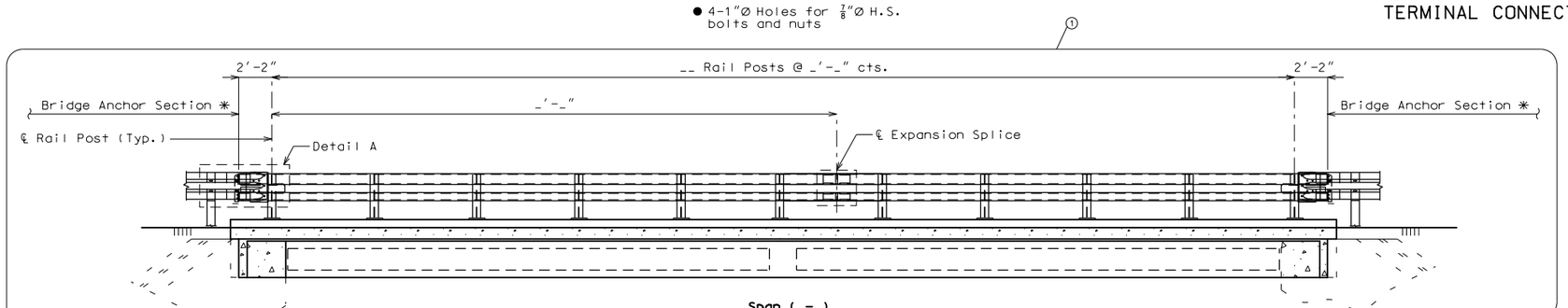

PART SECTION THRU SLAB SHOWING LEFT BRIDGE RAIL

(Right bridge rail similar)

✳ Bridge anchor section shall be in accordance with Missouri Standard Plan 606.22 except bearing plate and connector plate will not be required.

"THIS MEDIA SHOULD NOT BE CONSIDERED A CERTIFIED DOCUMENT."

DATE PREPARED	
1/15/2015	
ROUTE 51	STATE MO
DISTRICT BR	SHEET NO. 10
COUNTY BOLLINGER	
JOB NO. JOP2211	
CONTRACT ID.	
PROJECT NO.	
BRIDGE NO. G03152	

DATE	DESCRIPTION

IF A SEAL IS PRESENT ON THIS SHEET IT HAS BEEN ELECTRONICALLY SEALED AND DATED.

MISSOURI HIGHWAYS AND TRANSPORTATION COMMISSION

105 WEST CAPITOL
JEFFERSON CITY, MO 65102
1-888-ASK-MODOT (1-888-275-6636)

Detailed Aug. 2010
Checked Aug. 2010

Note: This drawing is not to scale. Follow dimensions.

Sheet No. of