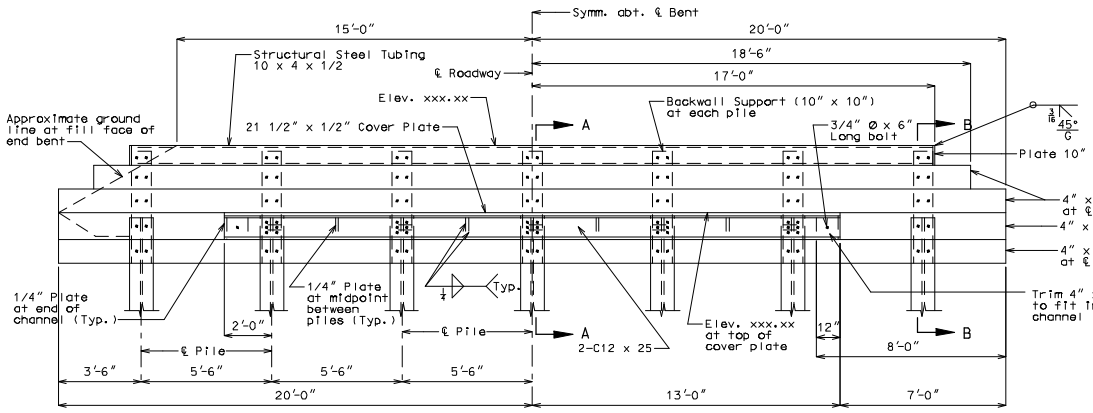

ELEVATION

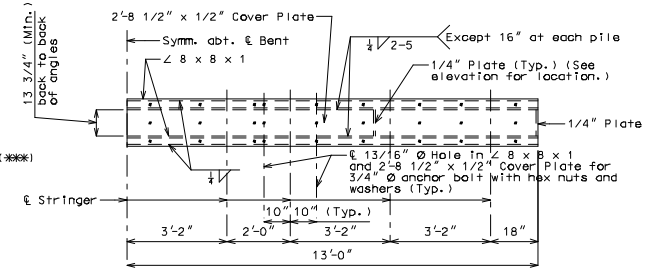

HALF PLAN OF INT. BENT CAP
(Bearing plates and piles not shown)

DETAILS OF INT. BENTS NO. 2, 3, & 4

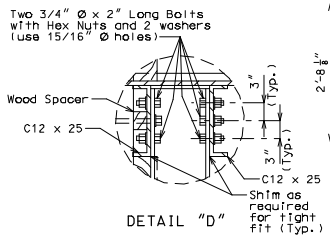

DETAIL "D"

(✳) Two 3/4" Ø x 15" Long Bolts with Hex Nuts and 2 washers. 3/4" Ø A307 bolts are acceptable at this location.

(✳✳) Two 3/4" Ø x 15" Long round Bolts with Hex Nuts and washers. 3/4" Ø A307 bolts are acceptable at this location.

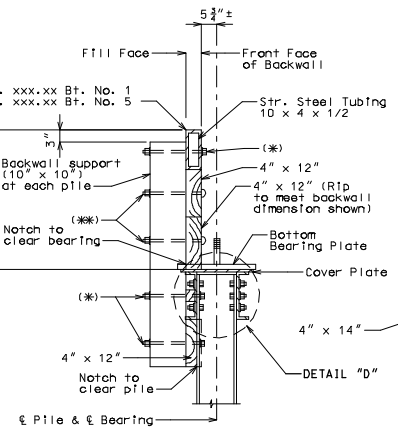

SECTION A-A

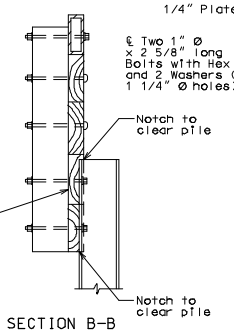

SECTION B-B
Sections A-A and B-B are same except as shown.

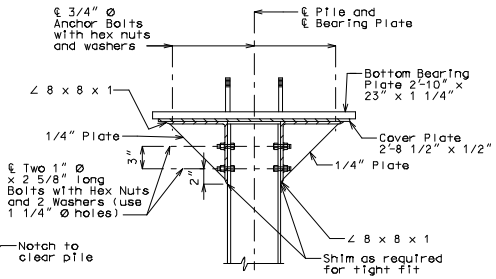

SECTION C-C

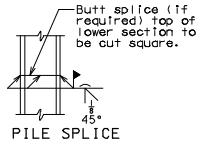

STEEL PILE SPLICE

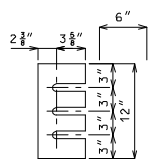

DETAIL OF SHIM PLATES (END BENTS)

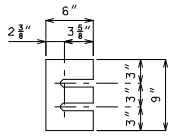

DETAIL OF SHIM PLATES (INT. BENTS)

Shim plates may be used between pile and channel at the end bents or angle at the intermediate bents. Shim plates may vary in thickness from 1/16" to thickness required.

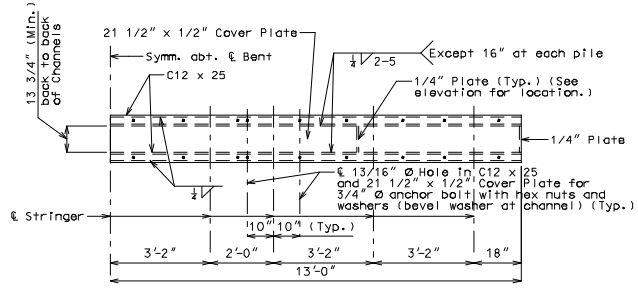

HALF PLAN OF END BENT CAP
(Bearing plates and piles not shown)

DETAILS OF END BENTS NO. 1 & 5

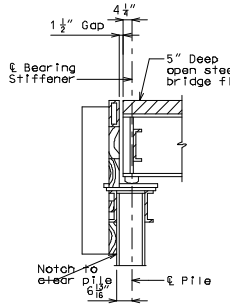

TYPICAL SECTION NEAR END BENT

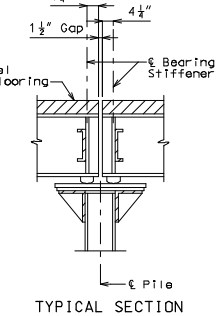

TYPICAL SECTION NEAR INT. BENT

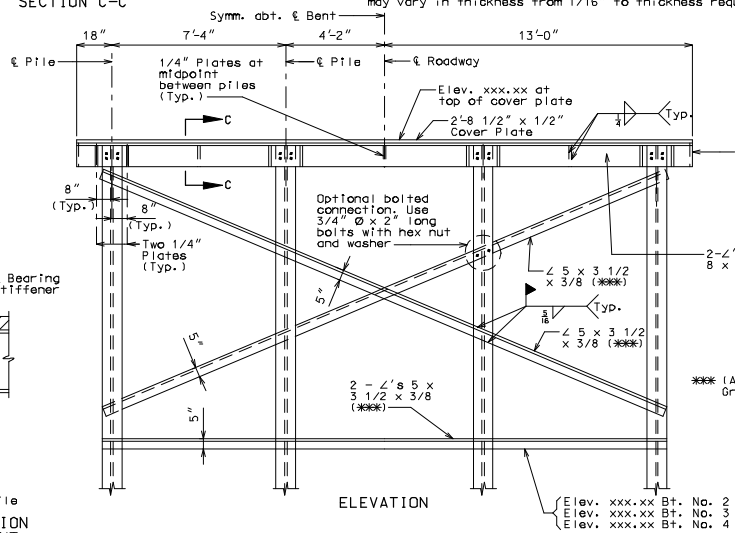

ELEVATION

Detailed
Checked

Note: This drawing is not to scale. Follow dimensions.

Sheet No. of

"THIS MEDIA SHOULD NOT BE CONSIDERED A CERTIFIED DOCUMENT."

DATE PREPARED	
07/28/2008	
ROUTE ✳	STATE MO
DISTRICT BR	SHEET NO. ✳
COUNTY ✳	
JOB NO. ✳	
CONTRACT ID.	
PROJECT NO.	
BRIDGE NO. TEM 2	

DESCRIPTION

DATE

MISSOURI HIGHWAYS AND TRANSPORTION COMMISSION

105 WEST CAPITOL
JEFFERSON CITY, MO 65102
1-888-ASK-MODOT (1-888-275-6636)

IF A SEAL IS PRESENT ON THIS SHEET IT HAS BEEN ELECTRONICALLY SEALED AND DATED.