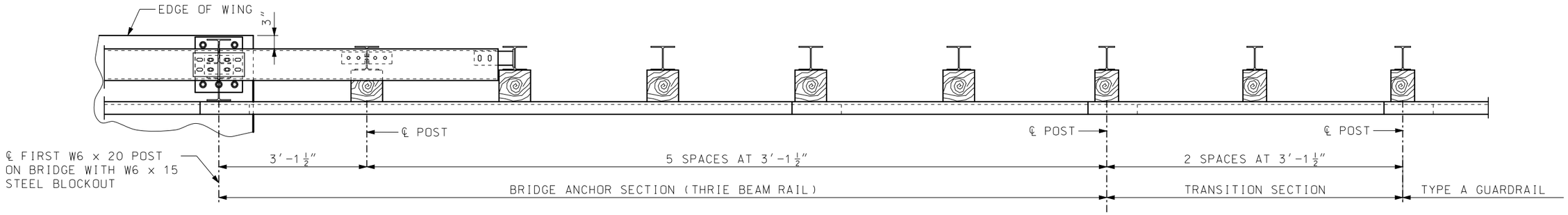


PLAN

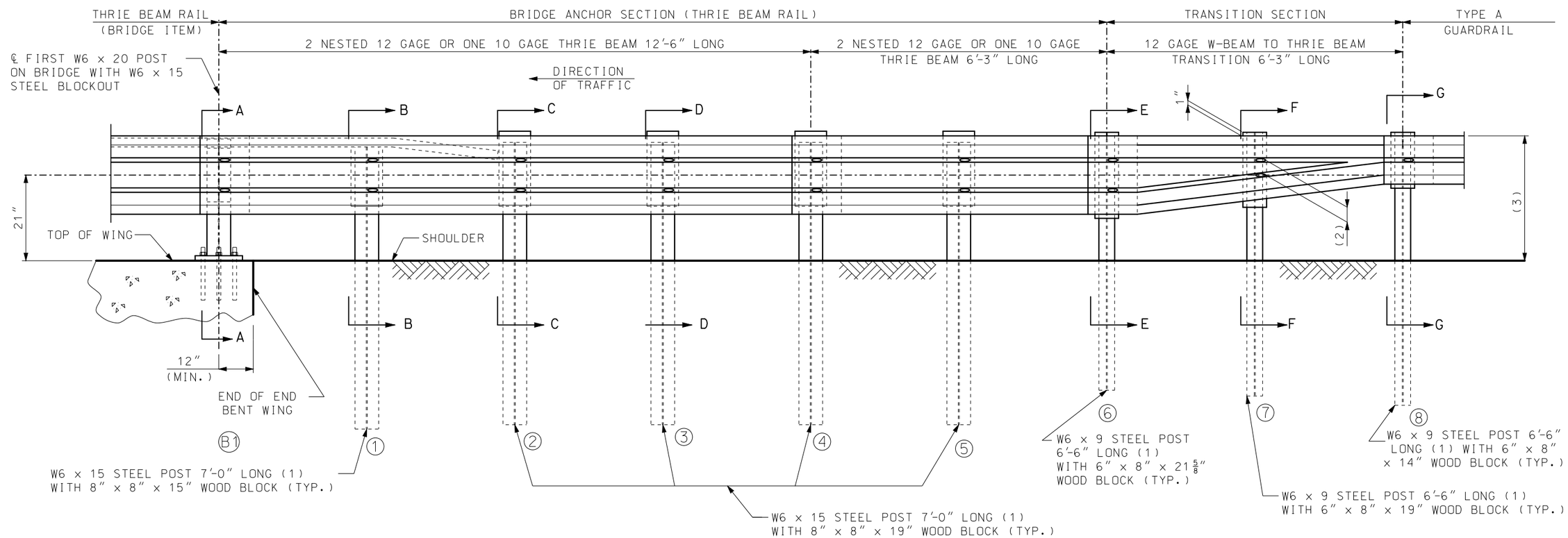


PART SECTION THROUGH SLAB AT END OF WING

NOTES:

FOR GENERAL NOTES, SEE SHEET 2 OF 5.

FOR POST DETAILS AND SECTION VIEWS, SEE SHEET 2 AND 3 OF 5.

(1) AT CONTRACTOR'S OPTION, EQUIVALENT SECTIONS MAY BE FABRICATED FROM MATERIAL MEETING AND IN ACCORDANCE WITH THE REQUIREMENTS OF ASTM A769 GRADE 36 OR 40. THE SECTIONS SHALL BE GALVANIZED AFTER FABRICATION IN ACCORDANCE WITH THE REQUIREMENTS OF AASHTO 111.

(2) VERIFY BY RAIL TRANSITION PRODUCER.

(3) TRANSITION FROM 31" TO 29" HEIGHT OVER NEXT TWO UPSTREAM 12'-6" W-BEAM RAILS.

MISSOURI HIGHWAYS AND TRANSPORTATION COMMISSION
105 WEST CAPITOL
JEFFERSON CITY, MO 65102
1-888-ASK-MODOT (1-888-275-6636)

STATE OF MISSOURI
ERIC E. SCHROETER
NUMBER PE-28411
PROFESSIONAL ENGINEER
THIS SHEET HAS BEEN SIGNED, SEALED AND DATED ELECTRONICALLY.

BRIDGE ANCHOR SECTION
(THRIE BEAM RAIL ON BRIDGE)

DATE EFFECTIVE: 7/01/016
DATE PREPARED: 5/13/2016

606.23J

SHEET NO. 1 OF 5

IF A SEAL IS PRESENT ON THIS SHEET IT HAS BEEN ELECTRONICALLY SEALED AND DATED.

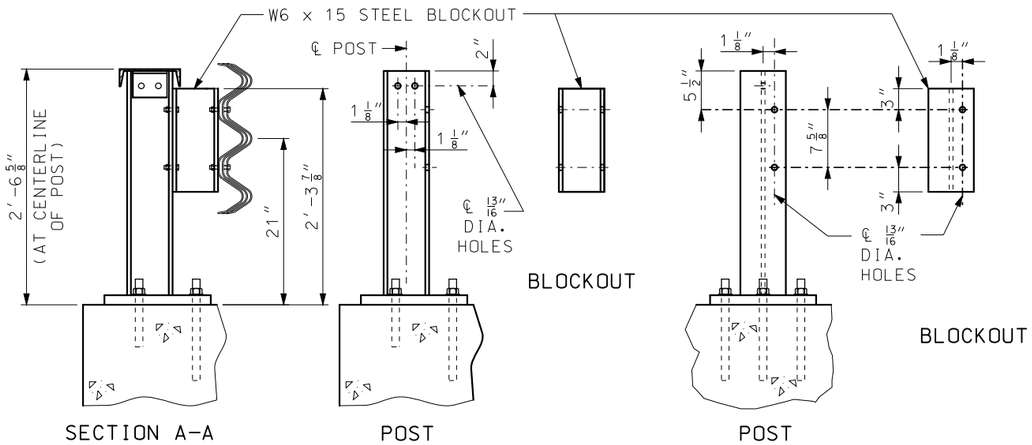


STEEL POST AND STEEL BLOCKOUT (B1)

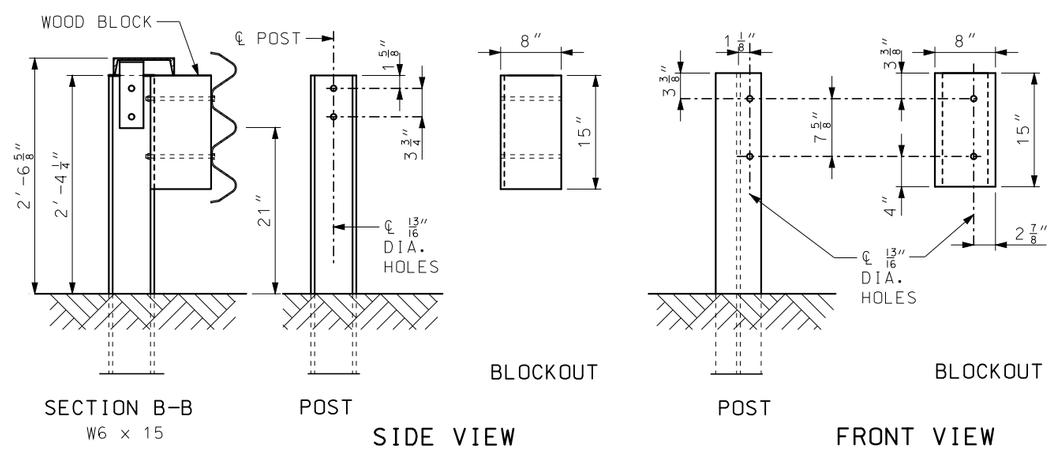


STEEL POST AND WOOD BLOCKOUT (1)

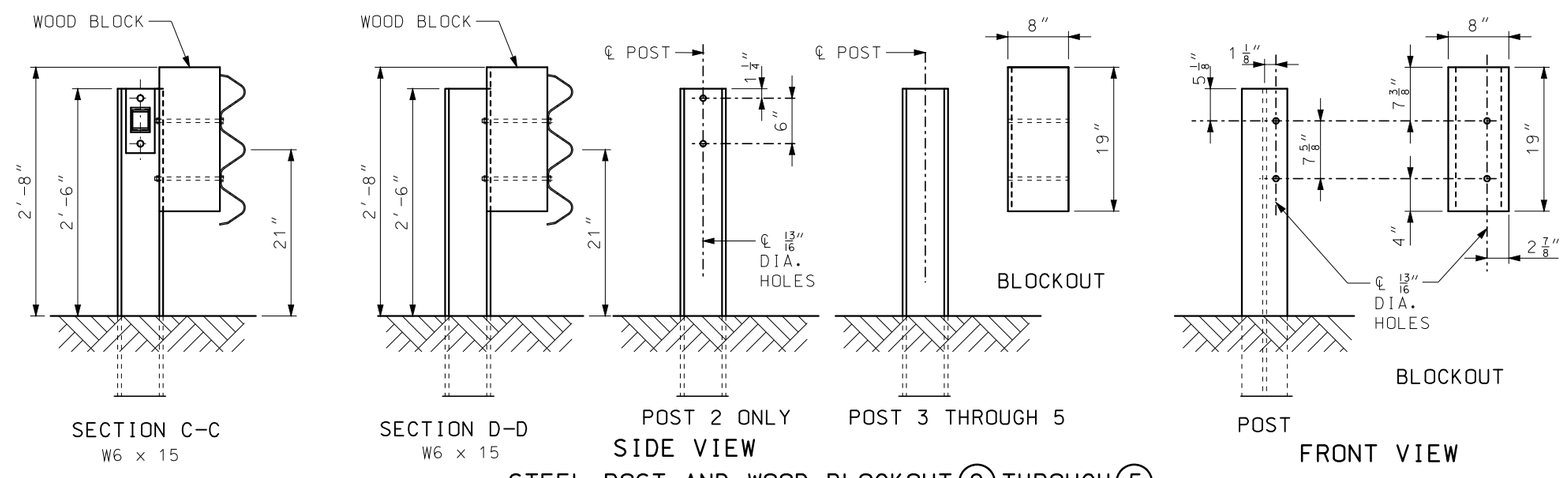


STEEL POST AND WOOD BLOCKOUT (2) THROUGH (5)

(2) VERIFY BY RAIL TRANSITION PRODUCER.

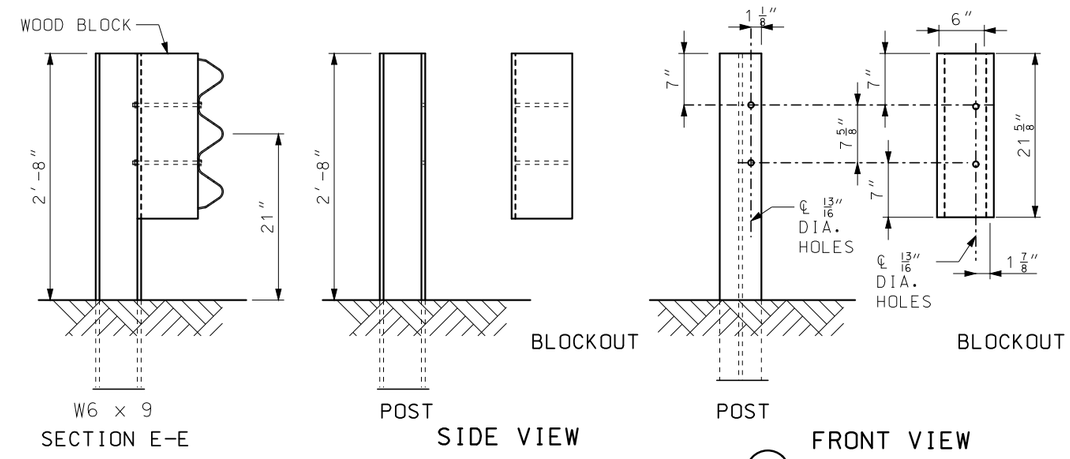


STEEL POST AND WOOD BLOCKOUT (6)

GENERAL NOTES:

DESIGN BASED UPON NCHRP REPORT 350 TEST LEVEL 3 (TL-3).

THE THRIE BEAM RAIL FOR THE BRIDGE ANCHOR SECTION SHALL BE 12 GAGE OR 10 GAGE AT THE CONTRACTOR'S OPTION, AND THE TRANSITION SECTION SHALL BE 12 GAGE.

FABRICATED STRUCTURAL STEEL SHALL BE ASTM A709 GRADE 36.

FOR PROTECTIVE COATING AND MATERIAL REQUIREMENTS, SEE SEC 1040 OF THE STANDARD SPECIFICATIONS.

RAIL POSTS SHALL BE SET PERPENDICULAR TO THE ROADWAY PROFILE GRADE AND VERTICALLY IN CROSS SECTION.

WASHERS SHALL BE USED AT ALL POST BOLTS.

USE 5/8" BUTTON-HEAD, OVAL SHOULDER BOLTS WITH HEX NUTS (THICKNESS OF HEX NUTS = 3/8" MIN.) AT ALL SLOTS.

ALL LAP SPLICES SHALL BE MADE IN THE DIRECTION OF TRAFFIC.

THE COST OF FURNISHING, FABRICATING AND INSTALLING TRANSITION SECTION, COMPLETE-IN-PLACE, SHALL BE PAID FOR AT THE CONTRACT UNIT PRICE PER EACH.

THE COST OF FURNISHING, FABRICATING AND INSTALLING BRIDGE ANCHOR SECTION (THRIE BEAM), COMPLETE-IN-PLACE, SHALL BE PAID FOR AT THE CONTRACT UNIT PRICE PER EACH.

FOR DETAILS NOT SHOWN, SEE BRIDGE THRIE BEAM RAIL SHEET.


MISSOURI HIGHWAYS AND TRANSPORTATION COMMISSION
105 WEST CAPITOL
JEFFERSON CITY, MO 65102
1-888-ASK-MODOT (1-888-275-6636)


STATE OF MISSOURI
ERIC E. SCHROETER
NUMBER PE-28411
PROFESSIONAL ENGINEER
THIS SHEET HAS BEEN SIGNED, SEALED AND DATED ELECTRONICALLY.

# BRIDGE ANCHOR SECTION
## (THRIE BEAM RAIL ON BRIDGE)

| | | | |
|---|---|---|---|
| DATE EFFECTIVE: | 07/01/2016 | 606.23J | SHEET NO. 2 OF 5 |
| DATE PREPARED: | 5/13/2016 | | |

IF A SEAL IS PRESENT ON THIS SHEET IT HAS BEEN ELECTRONICALLY SEALED AND DATED.

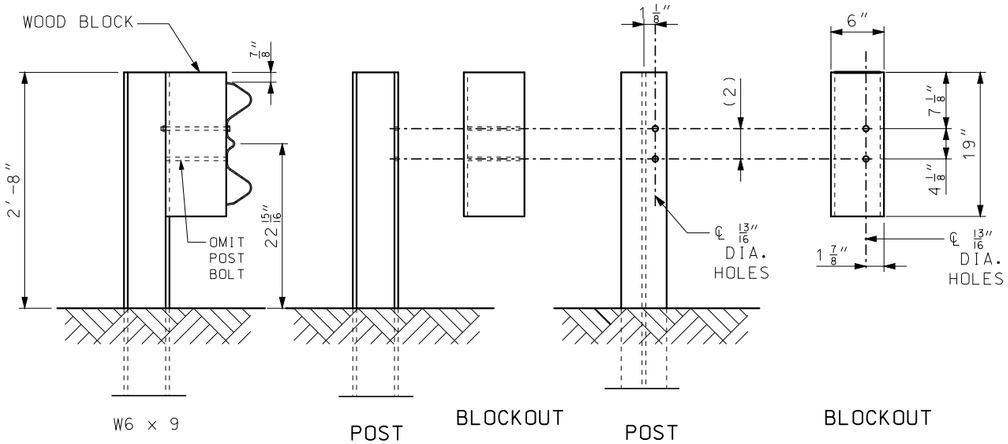


STEEL POST AND WOOD BLOCKOUT (7)

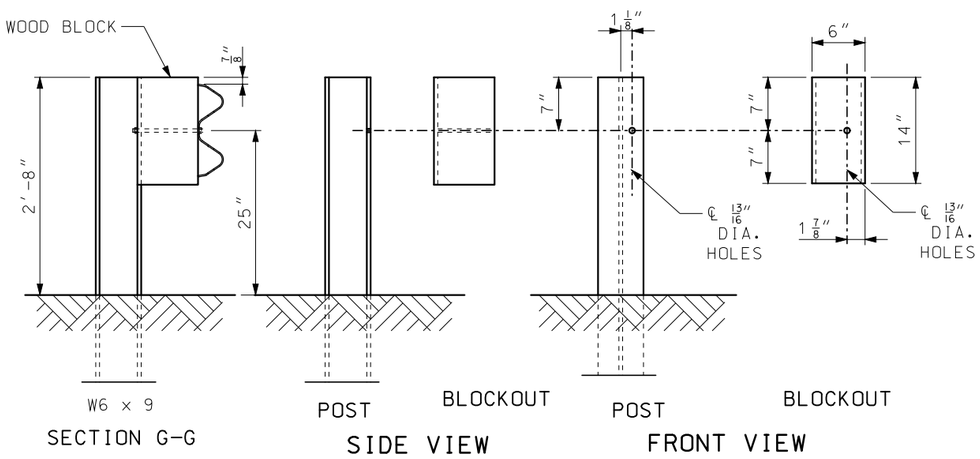


STEEL POST AND WOOD BLOCKOUT (8)

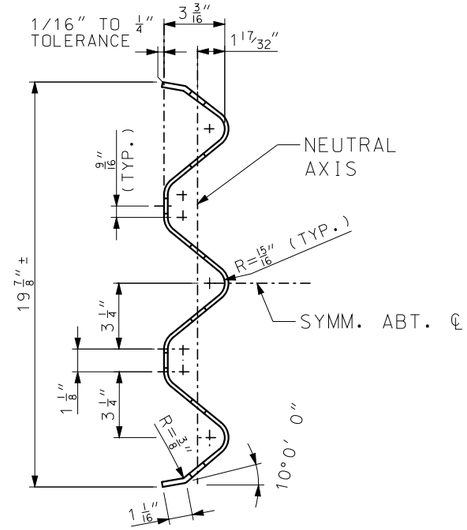


SECTION H-H

THROUGH THRIE BEAM RAIL

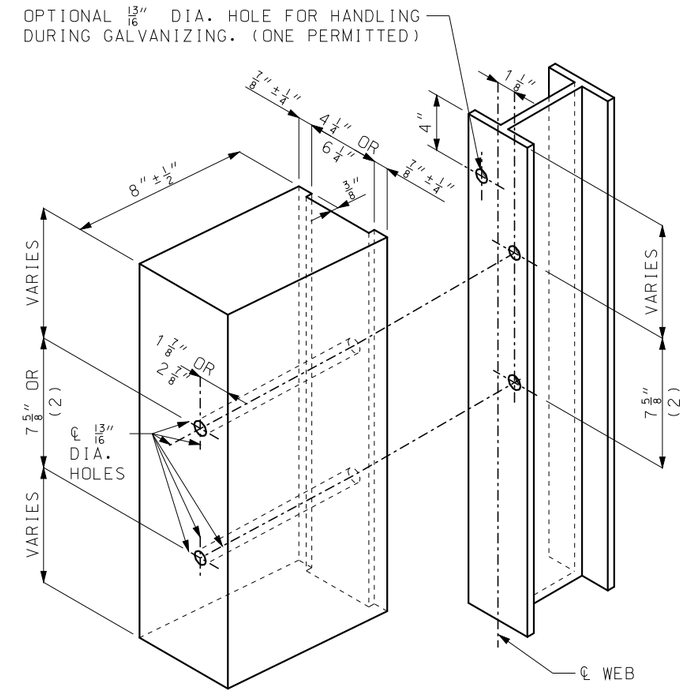


POST (7) - (2) VERIFY BY RAIL TRANSITION PRODUCER (SEE FRONT SHEET)
POST (8) - ONLY 1 HOLE REQUIRED
ALL HOLES 13/16" DIAMETER EXCEPT AS NOTED

HOLE PUNCHING DETAIL

FOR STEEL POST & WOOD BLOCKS (6" AND 8")

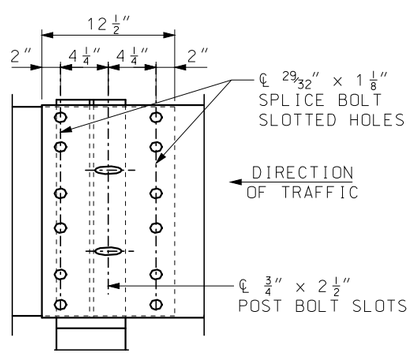


THRIE BEAM RAIL SPLICE AT POST

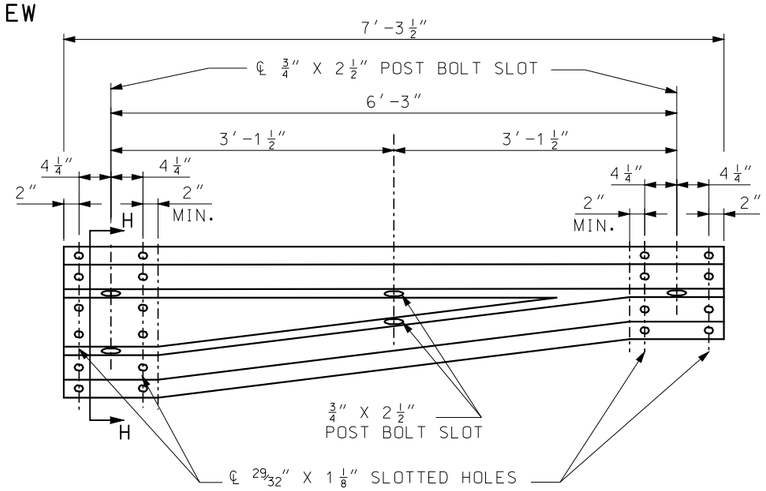


ASYMMETRICAL TRANSITION SECTION


MISSOURI HIGHWAYS AND TRANSPORTATION COMMISSION
105 WEST CAPITOL
JEFFERSON CITY, MO 65102
1-888-ASK-MODOT (1-888-275-6636)


STATE OF MISSOURI
ERIC E. SCHROETER
NUMBER PE-28411
PROFESSIONAL ENGINEER
THIS SHEET HAS BEEN SIGNED, SEALED AND DATED ELECTRONICALLY.

BRIDGE ANCHOR SECTION
(THRIE BEAM RAIL ON BRIDGE)

| | | | |
|---|---|---|---|
| DATE EFFECTIVE: | 07/01/2016 | 606.23J | SHEET NO. 3 OF 5 |
| DATE PREPARED: | 5/13/2016 | | |

IF A SEAL IS PRESENT ON THIS SHEET IT HAS BEEN ELECTRONICALLY SEALED AND DATED.

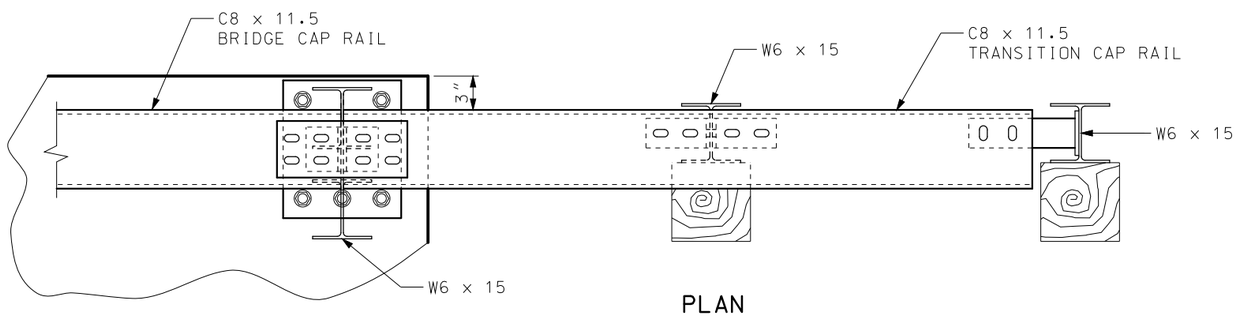


PLAN

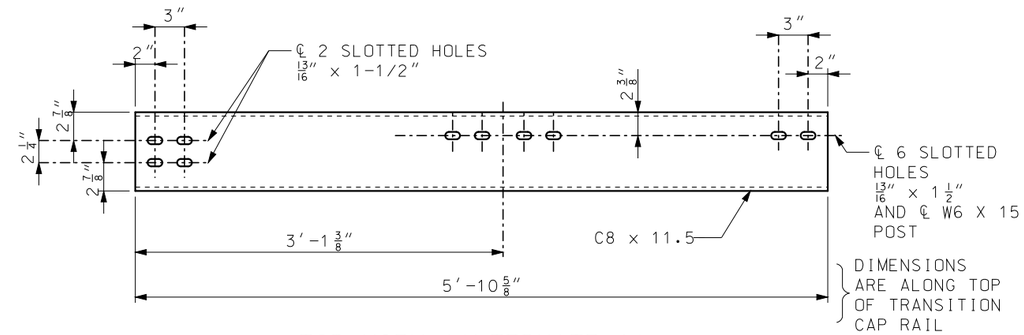


TOP VIEW (ALTERNATE 1)

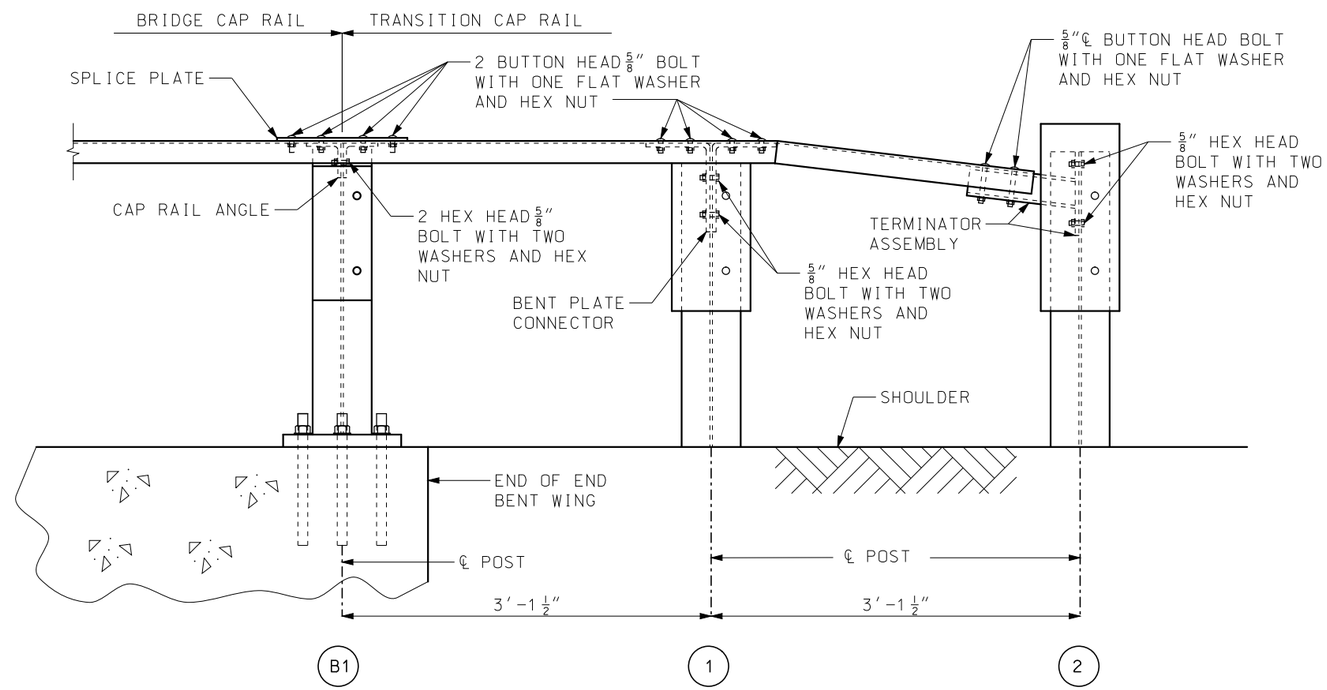


ELEVATION
(THRIE BEAM RAIL NOT SHOWN)

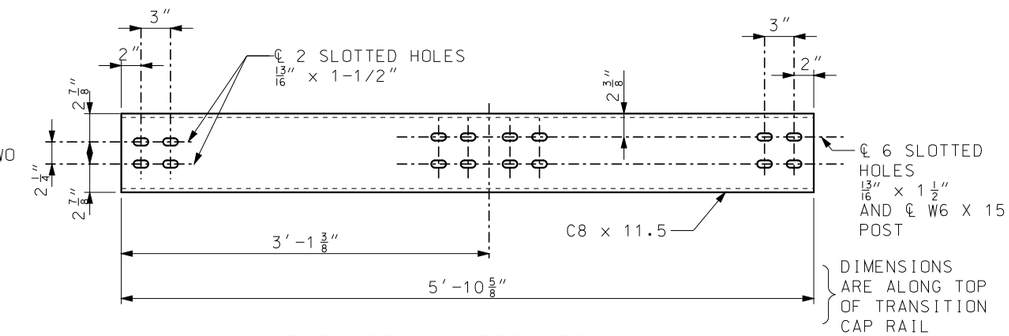


TOP VIEW (ALTERNATE 2)

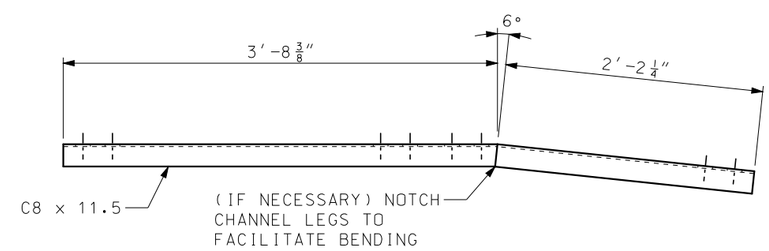


ELEVATION
TRANSITION CAP RAIL

GENERAL NOTES:

**MISSOURI HIGHWAYS AND TRANSPORTATION COMMISSION**
105 WEST CAPITOL
JEFFERSON CITY, MO 65102
1-888-ASK-MODOT (1-888-275-6636)

STATE OF MISSOURI
ERIC E. SCHROETER
NUMBER PE-28411
PROFESSIONAL ENGINEER
THIS SHEET HAS BEEN SIGNED, SEALED AND DATED ELECTRONICALLY.

BRIDGE ANCHOR SECTION
(THRIE BEAM RAIL ON BRIDGE)

DATE EFFECTIVE: 07/01/2016
DATE PREPARED: 5/13/2016

606.23J

SHEET NO. 4 OF 5

IF A SEAL IS PRESENT ON THIS SHEET IT HAS BEEN ELECTRONICALLY SEALED AND DATED.

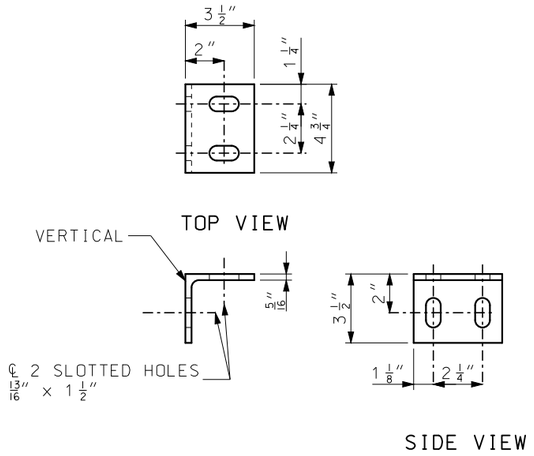


CAP RAIL ANGLE

∠ $3\frac{1}{2}$" × $3\frac{1}{2}$" × $\frac{5}{16}$"

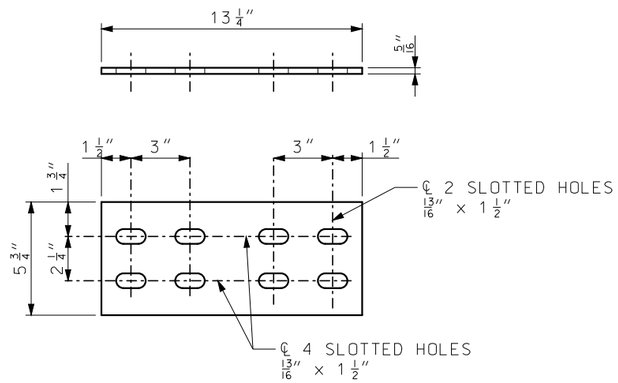


SPLICE PLATE

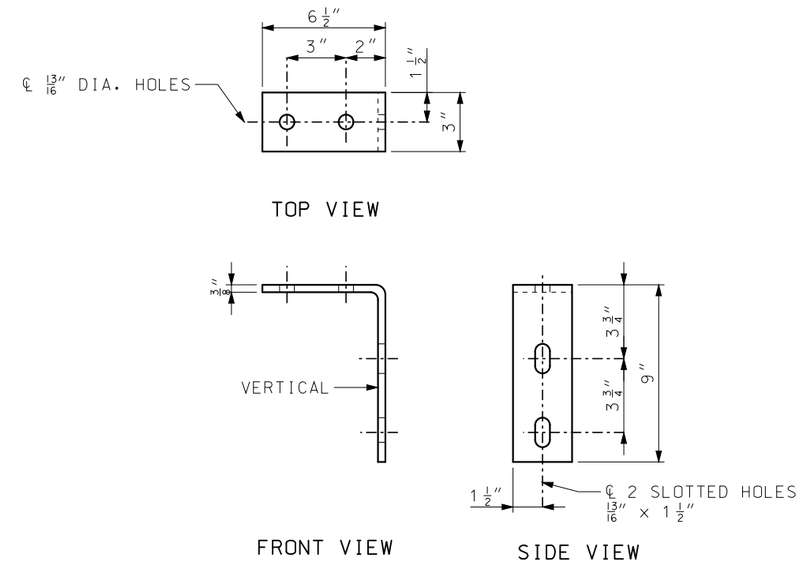


BENT PLATE CONNECTOR

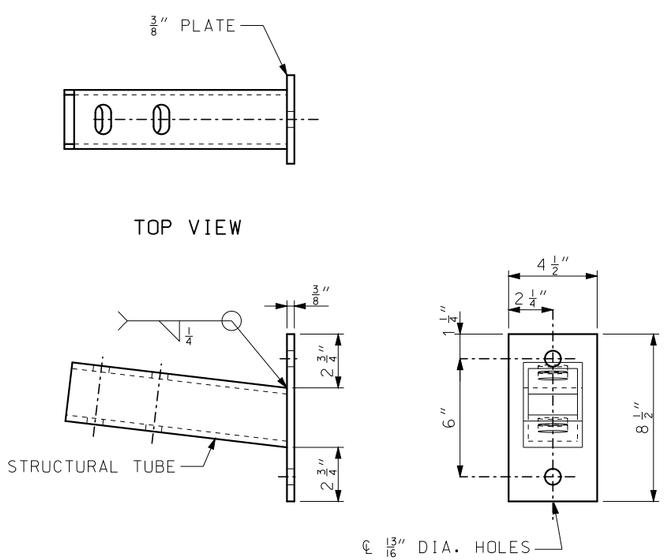


TERMINATOR ASSEMBLY

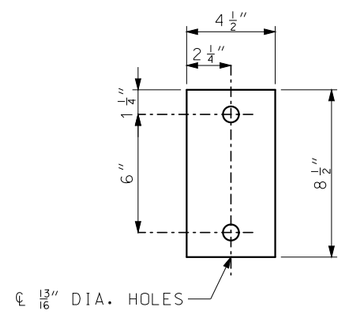


$\frac{3}{8}$" PLATE

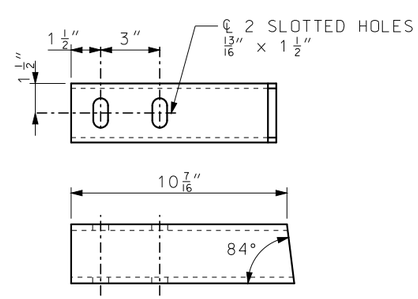


STRUCTURAL TUBE

TS 3" × 3" × $\frac{5}{16}$"

IF A SEAL IS PRESENT ON THIS SHEET IT HAS BEEN ELECTRONICALLY SEALED AND DATED.

**MISSOURI HIGHWAYS AND TRANSPORTATION COMMISSION**

105 WEST CAPITOL
JEFFERSON CITY, MO 65102
1-888-ASK-MODOT (1-888-275-6636)

STATE OF MISSOURI
ERIC E. SCHROETER
NUMBER PE-28411
PROFESSIONAL ENGINEER

THIS SHEET HAS BEEN SIGNED, SEALED AND DATED ELECTRONICALLY.

BRIDGE ANCHOR SECTION

(THRIE BEAM RAIL ON BRIDGE)

DATE EFFECTIVE: 07/01/2016
DATE PREPARED: 5/13/2016

606.23J

SHEET NO. 5 OF 5