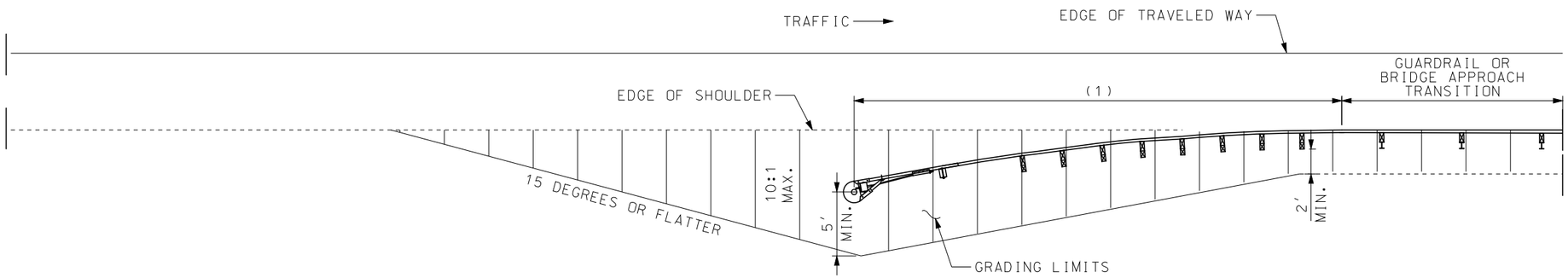

GRADING LIMITS FOR FLARED CRASHWORTHY END TERMINALS

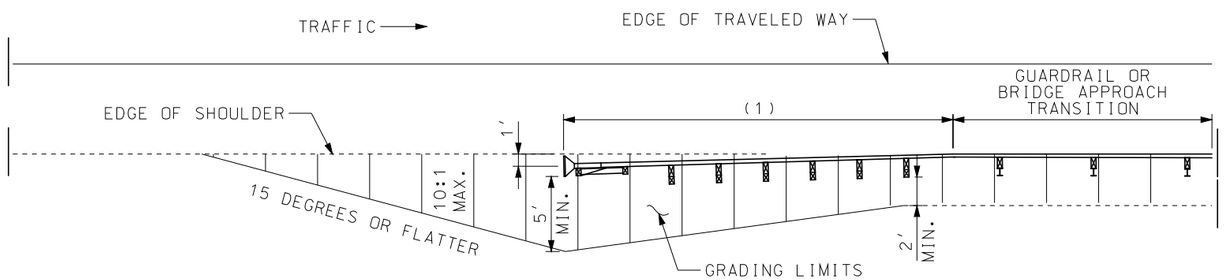

PREFERRED GRADING LIMITS FOR CRASHWORTHY END TERMINALS

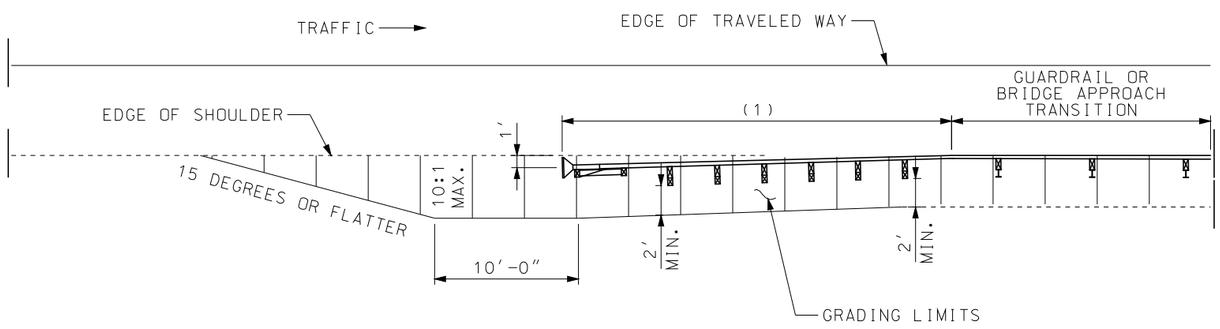

ALTERNATE GRADING LIMITS FOR CRASHWORTHY END TERMINALS

(1) APPROVED CRASHWORTHY END TERMINAL

GENERAL NOTES:

THE CONTRACTOR SHALL PROVIDE THE ENGINEER WITH APPROVED SHOP DRAWINGS OF THE APPROVED CRASH-WORTHY END TERMINAL.

END ANCHORS SHALL BE INSTALLED ON ENDS OF GUARDRAIL RUNS WHERE CRASHWORTHY END TERMINALS ARE NOT REQUIRED.

MISSOURI HIGHWAYS AND TRANSPORTATION COMMISSION
105 WEST CAPITOL
JEFFERSON CITY, MO 65102
1-888-ASK-MODOT (1-888-275-6636)

STATE OF MISSOURI
ERIC E. SCHROETER
NUMBER PE-28411
PROFESSIONAL ENGINEER
THIS SHEET HAS BEEN SIGNED, SEALED AND DATED ELECTRONICALLY.

MASH
CRASHWORTHY END TERMINALS
TYPE A
GRADING LIMITS

DATE EFFECTIVE:	01/01/2017	606.81	SHEET NO. 1 OF 1
DATE PREPARED:	10/28/2016		

IF A SEAL IS PRESENT ON THIS SHEET IT HAS BEEN ELECTRONICALLY SEALED AND DATED.