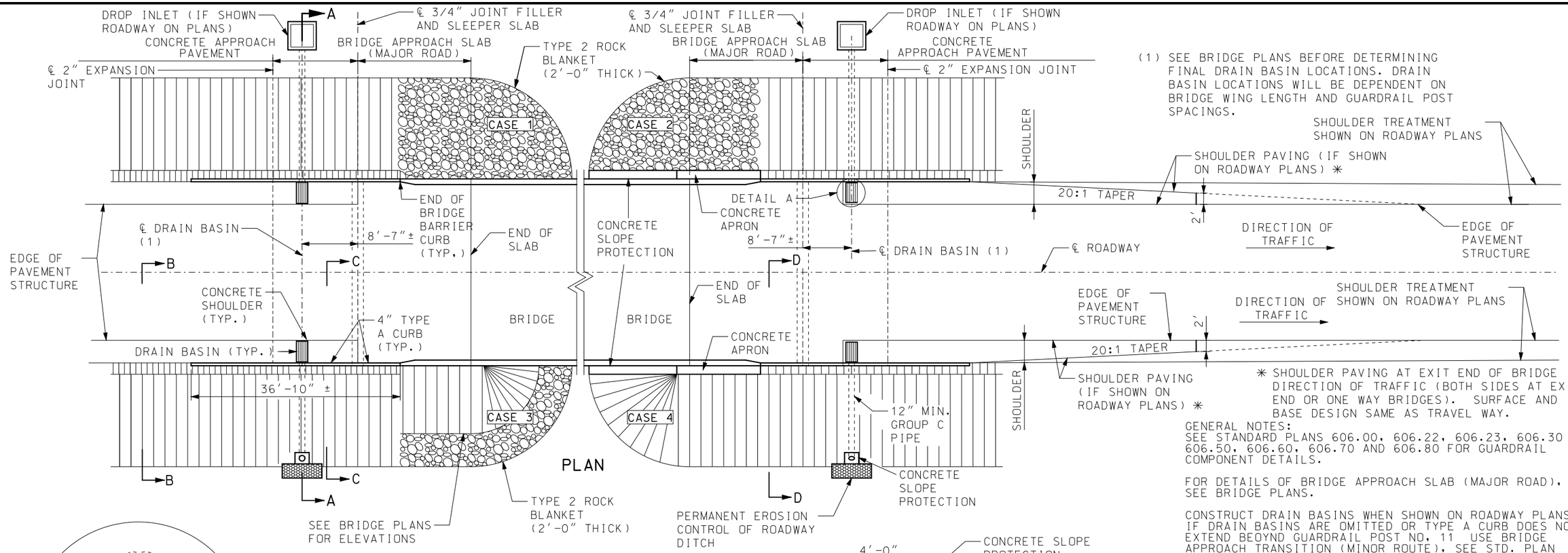

(1) SEE BRIDGE PLANS BEFORE DETERMINING FINAL DRAIN BASIN LOCATIONS. DRAIN BASIN LOCATIONS WILL BE DEPENDENT ON BRIDGE WING LENGTH AND GUARDRAIL POST SPACINGS.

✳ SHOULDER PAVING AT EXIT END OF BRIDGE IN DIRECTION OF TRAFFIC (BOTH SIDES AT EXIT END OR ONE WAY BRIDGES). SURFACE AND BASE DESIGN SAME AS TRAVEL WAY.

GENERAL NOTES:
SEE STANDARD PLANS 606.00, 606.22, 606.23, 606.30 606.50, 606.60, 606.70 AND 606.80 FOR GUARDRAIL COMPONENT DETAILS.

FOR DETAILS OF BRIDGE APPROACH SLAB (MAJOR ROAD), SEE BRIDGE PLANS.

CONSTRUCT DRAIN BASINS WHEN SHOWN ON ROADWAY PLANS. IF DRAIN BASINS ARE OMITTED OR TYPE A CURB DOES NOT EXTEND BEOYND GUARDRAIL POST NO. 11 USE BRIDGE APPROACH TRANSITION (MINOR ROUTE), SEE STD. PLAN 606.60 SHEET 2 OF 5.

TYPE A CURB IS TO BE CONSTRUCTED TO THE END OF THE BRIDGE APPROACH TRANSITION WHEN DRAIN BASINS ARE REQUIRED. SEE STANDARD PLANS 609.00 FOR TYPE A CURB.

SEE STANDARD PLANS 504.00 FOR DETAILS OF CONCRETE APPROACH PAVEMENT.

FOR DETAILS OF GRATES AND BEARING PLATES FOR DROP INLET, SEE STANDARD PLANS 614.10 AND 614.11.

FOR DETAILS OF DROP INLET FOR ROADWAY SURFACE, SEE STANDARD PLANS 731.10. USE TYPE A DROP INLET AND USE DEPTH OF DROP INLET AS SHOWN ON ROADWAY PLANS.

PAYMENT FOR DROP INLET, GRATE, GROUP C PIPE, CONCRETE SLOPE PROTECTION AT PIPE OUTLETS, MATERIAL AND INSTALLATION WILL BE PAID FOR AT THE CONTRACT UNIT PRICE FOR DRAIN BASIN PER EACH.

FOR DETAILS OF SECTION B-B, C-C AND D-D, SEE SHEET 2 OF 3.

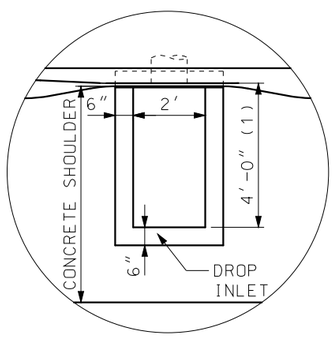

DETAIL A

CASE	FILL SLOPE PROTECTION
1	ROCK BLANKET FILL SLOPE
2	ROCK BLANKET FILL SLOPE WITH CONCRETE SLOPE PROTECTION
3	FILL SLOPE WITH PARTIAL ROCK BLANKET
4	FILL SLOPE WITH CONCRETE SLOPE PROTECTION

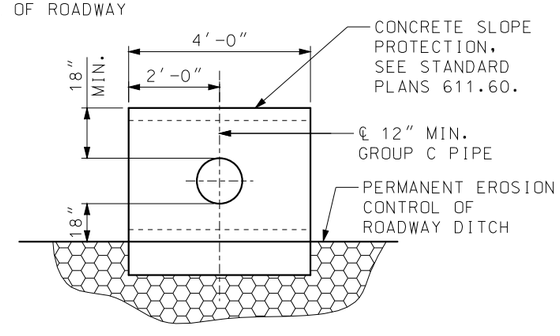

SECTION E-E

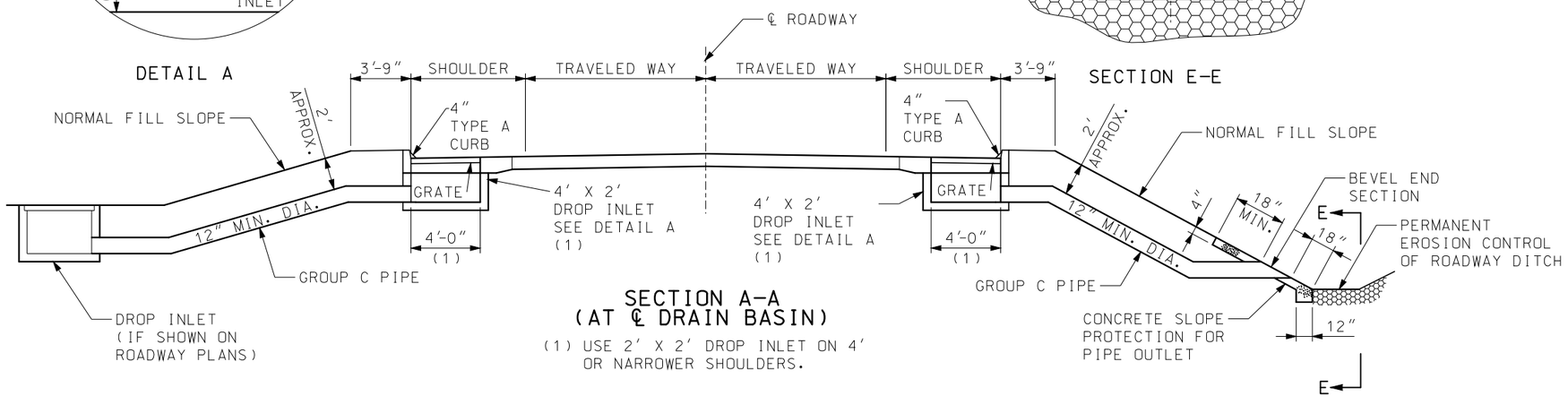

SECTION A-A
(AT ℄ DRAIN BASIN)

(1) USE 2' X 2' DROP INLET ON 4' OR NARROWER SHOULDERS.

MISSOURI HIGHWAYS AND TRANSPORTATION COMMISSION
105 WEST CAPITOL
JEFFERSON CITY, MO 65102
1-888-ASK-MODOT (1-888-275-6636)

STATE OF MISSOURI
ERIC E. SCHROETER
NUMBER PE-28411
PROFESSIONAL ENGINEER
THIS SHEET HAS BEEN SIGNED, SEALED AND DATED ELECTRONICALLY.

DRAIN BASIN, SHOULDER PAVING AND FILL SLOPES AT BRIDGE ENDS (MAJOR ROAD)

DATE EFFECTIVE: 01/01/2017
DATE PREPARED: 11/2/2016

609.40S

SHEET NO. 1 OF 3

IF A SEAL IS PRESENT ON THIS SHEET IT HAS BEEN ELECTRONICALLY SEALED AND DATED.

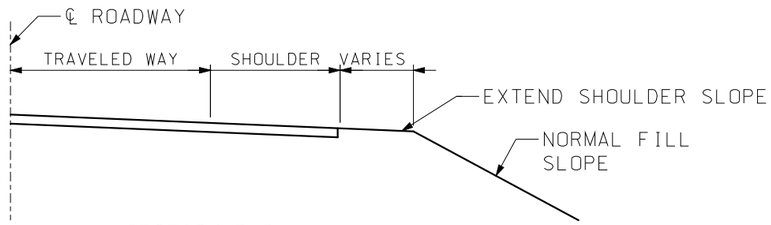

SECTION B-B

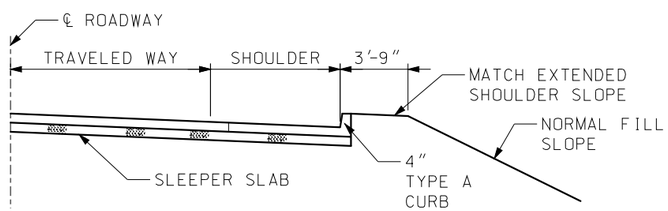

SECTION C-C

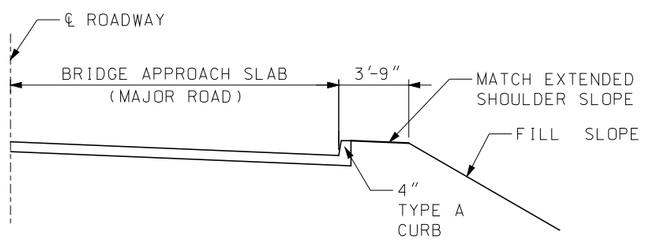

SECTION D-D

NOTE: FOR DETAILS NOT SHOWN, SEE OTHER SECTIONS.

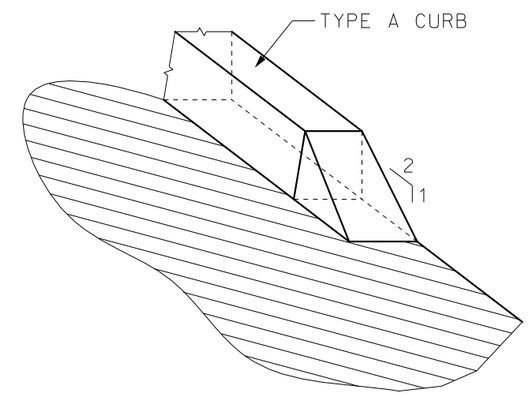

TYPE A CURB
TRANSITION DETAIL

GENERAL NOTE:

FOR LOCATION OF SEC. B-B, C-C AND D-D, SEE SHEET 1 OF 3.

MISSOURI HIGHWAYS AND TRANSPORTATION COMMISSION
105 WEST CAPITOL
JEFFERSON CITY, MO 65102
1-888-ASK-MODOT (1-888-275-6636)

STATE OF MISSOURI
ERIC E. SCHROETER
NUMBER PE-28411
PROFESSIONAL ENGINEER
THIS SHEET HAS BEEN SIGNED, SEALED AND DATED ELECTRONICALLY.

DRAIN BASIN, SHOULDER PAVING AND FILL SLOPE AT BRIDGE ENDS (MAJOR ROAD)

DATE EFFECTIVE: 01/01/2017
DATE PREPARED: 11/2/2016

609.40S

SHEET NO. 2 OF 3

IF A SEAL IS PRESENT ON THIS SHEET IT HAS BEEN ELECTRONICALLY SEALED AND DATED.

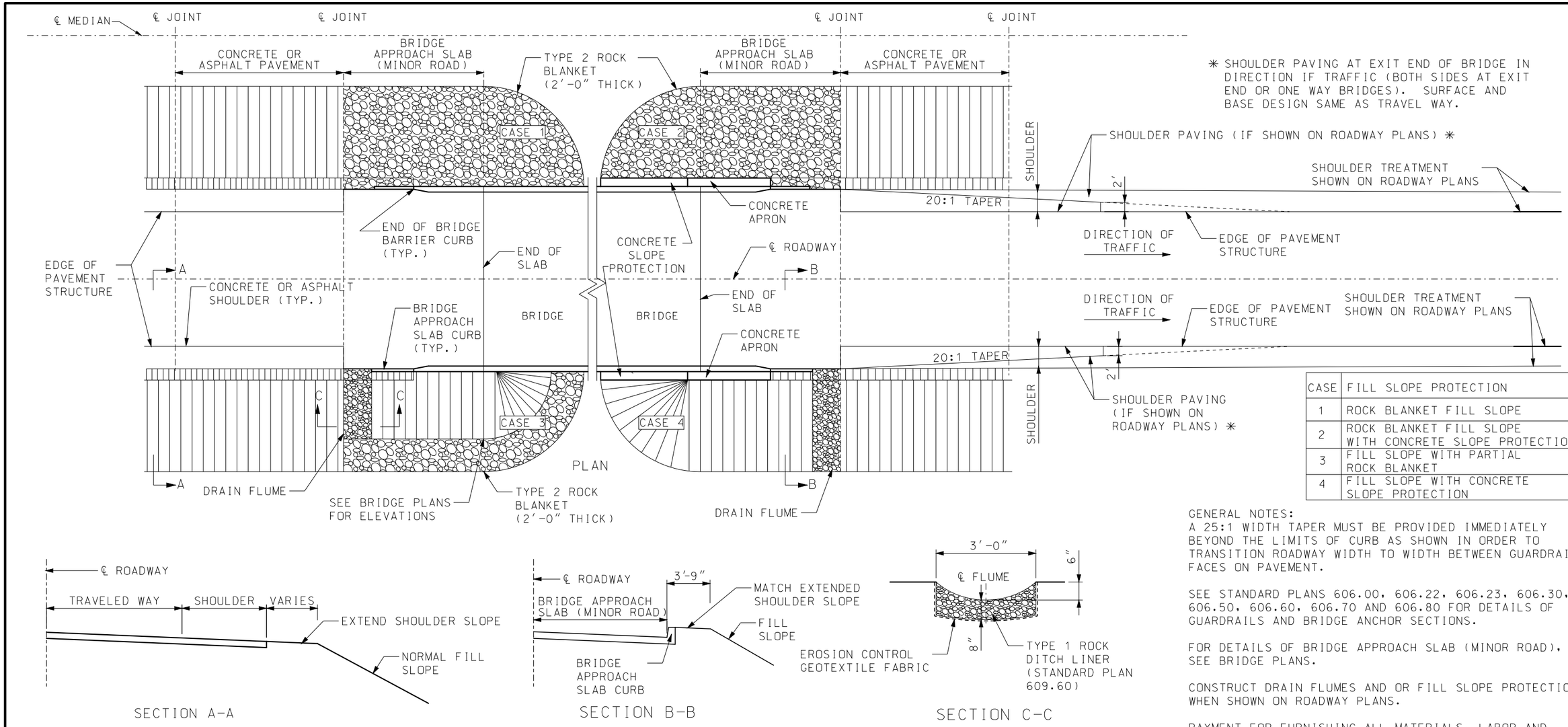

✳ SHOULDER PAVING AT EXIT END OF BRIDGE IN DIRECTION IF TRAFFIC (BOTH SIDES AT EXIT END OR ONE WAY BRIDGES). SURFACE AND BASE DESIGN SAME AS TRAVEL WAY.

CASE	FILL SLOPE PROTECTION
1	ROCK BLANKET FILL SLOPE
2	ROCK BLANKET FILL SLOPE WITH CONCRETE SLOPE PROTECTION
3	FILL SLOPE WITH PARTIAL ROCK BLANKET
4	FILL SLOPE WITH CONCRETE SLOPE PROTECTION

GENERAL NOTES:
A 25:1 WIDTH TAPER MUST BE PROVIDED IMMEDIATELY BEYOND THE LIMITS OF CURB AS SHOWN IN ORDER TO TRANSITION ROADWAY WIDTH TO WIDTH BETWEEN GUARDRAIL FACES ON PAVEMENT.

SEE STANDARD PLANS 606.00, 606.22, 606.23, 606.30, 606.50, 606.60, 606.70 AND 606.80 FOR DETAILS OF GUARDRAILS AND BRIDGE ANCHOR SECTIONS.

FOR DETAILS OF BRIDGE APPROACH SLAB (MINOR ROAD), SEE BRIDGE PLANS.

CONSTRUCT DRAIN FLUMES AND OR FILL SLOPE PROTECTION WHEN SHOWN ON ROADWAY PLANS.

PAYMENT FOR FURNISHING ALL MATERIALS, LABOR AND EXCAVATION NECESSARY TO CONSTRUCT THE DRAIN FLUMES, INCLUDING THE PERMANENT EROSION CONTROL GEOTEXTILE, COMPLETE-IN-PLACE, WILL BE CONSIDERED COMPLETELY COVERED BY THE CONTRACT UNIT PRICE FOR TYPE 1 ROCK DITCH LINER.

SECTION A-A

SECTION B-B

SECTION C-C

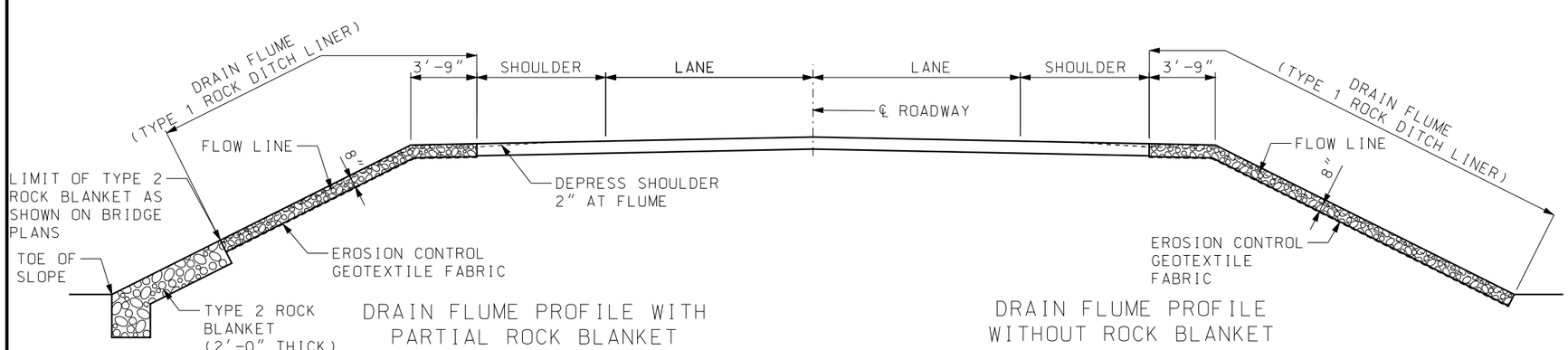

DRAIN FLUME PROFILE WITH PARTIAL ROCK BLANKET

DRAIN FLUME PROFILE WITHOUT ROCK BLANKET

MISSOURI HIGHWAYS AND TRANSPORTATION COMMISSION
105 WEST CAPITOL
JEFFERSON CITY, MO 65102
1-888-ASK-MODOT (1-888-275-6636)

STATE OF MISSOURI
ERIC E. SCHROETER
NUMBER PE-28411
PROFESSIONAL ENGINEER
THIS SHEET HAS BEEN SIGNED, SEALED AND DATED ELECTRONICALLY.

DRAIN FLUME, SHOULDER PAVING AND FILL SLOPES AT BRIDGE ENDS (MINOR ROAD)

DATE EFFECTIVE: 01/01/2017
DATE PREPARED: 11/2/2016

609.40S

SHEET NO. 3 OF 3

IF A SEAL IS PRESENT ON THIS SHEET IT HAS BEEN ELECTRONICALLY SEALED AND DATED.