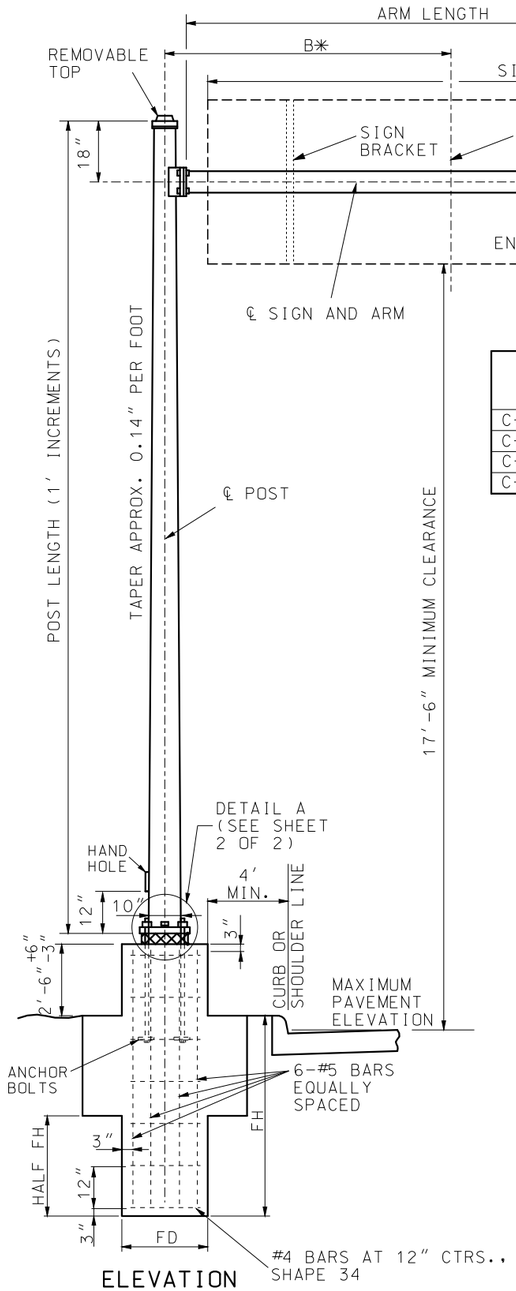

ELEVATION

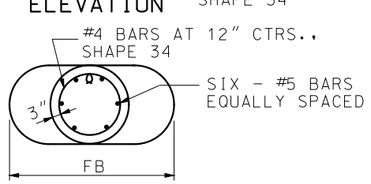

PLAN

SINGLE ARM CANTILEVER

SIGN BRACKETS	
SIGN HT. (IN.)	MAX. LIN. FT. OF SIGN WIDTH PER BRACKET 1 CLAMP TYPE
42	16
48	13
60	8
72	5
84	3

ARM = 35 000 PSI

TYPE NUMBER	ARM DIMENSIONS		POST		MAX SIGN AREA	MAX. B WITH MAX. SIGN AREA
	LENGTH	DIA. / THK	GA	DIA.	SQ. FT.	
C-1710-12	12'	6" STD 0.280" THK	7	10"	41	8'-0"
C-1710-18	18'					
C-1310-12	12'	6" EX HVY 0.432" THK	3	10"	59	8'-9"
C-1310-18	18'					

* FOR SIGNS WITH SIGN AREAS LESS THAN THE MAXIMUM LISTED IN THE TABLE ABOVE, B CAN BE RECALCULATED USING THE FOLLOWING EQUATION:

$$\left(\text{MAX. B FOR TRUE SIGN AREA}\right) \leq \frac{\left(\text{MAX SIGN AREA}\right) \times \left(\text{MAX. B WITH MAX. SIGN AREA}\right)}{\left(\text{TRUE SIGN AREA}\right)}$$

** THE CALCULATED VALUE OF B CANNOT RESULT IN A DISTANCE GREATER THAN $\frac{1}{4}$ OF THE SIGN WIDTH

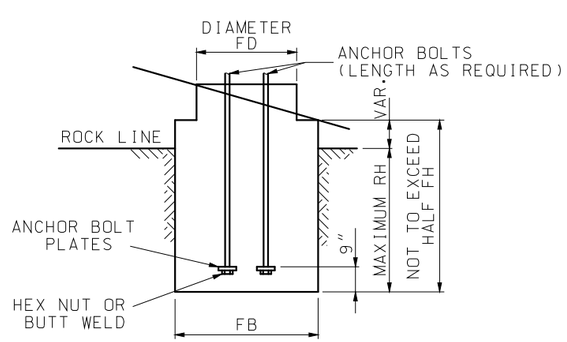

NOTE:
REINFORCEMENT PLACED SAME AS STANDARD FOOTING. CONCRETE TO BE POURED TO EXCAVATED FACE OF ROCK.

MODIFIED FOOTING IN SOLID ROCK

ESTIMATED QUANTITIES											
TYPE NUMBER	DIAMETER		CU YD CLASS B CONCRETE FOOTING				REINFORCING STEEL				
			FD SECTION		FB SECTION		#5		#4 (1)		TOTAL LBS
	FD	FB	1' DEPTH	1" DEPTH	1' DEPTH	1" DEPTH	NO.	FT-IN	NO.	FT-IN	
C-1710	2'	4'	0.11635	0.0097	0.2645	0.0220	6	7'-6"	9	5'-7"	81
C-1310	2'	4'	0.11635	0.0097	0.2645	0.0220	6	7'-6"	9	5'-7"	81

(1) ESTIMATED QUANTITY FOR REINFORCING STEEL IS BASED ON A 2:1 (H:V) SLOPE.

MODIFIED FOOTING IN SOLID ROCK							
TYPE NUMBER	ANCHOR BOLT DIA.	ANCHOR BOLT PLATE	FOOTING			CLASS B CONCRETE FOOTING FB SECTION CU. YD.	
			RH	FD	FB	1' DEPTH	1" DEPTH
C-1710 & C-1310	$1\frac{1}{2}$"	$3\frac{1}{2}$" × $3\frac{1}{2}$" × $\frac{3}{4}$"	2'-6"	2'-0"	3'-0"	1904	0159
C-2315	2"	$3\frac{1}{2}$" × $3\frac{1}{2}$" × $\frac{3}{4}$"	3'-0"	3'-0"	3'-6"	3173	0264
C-2318	2"	$3\frac{1}{2}$" × $3\frac{1}{2}$" × $\frac{3}{4}$"	3'-6"	3'-6"	3'-6"	3563	0297
C-2018	$2\frac{1}{4}$"	$4\frac{1}{2}$" × $4\frac{1}{2}$" × $\frac{3}{4}$"	3'-6"	3'-6"	3'-6"	3563	0297

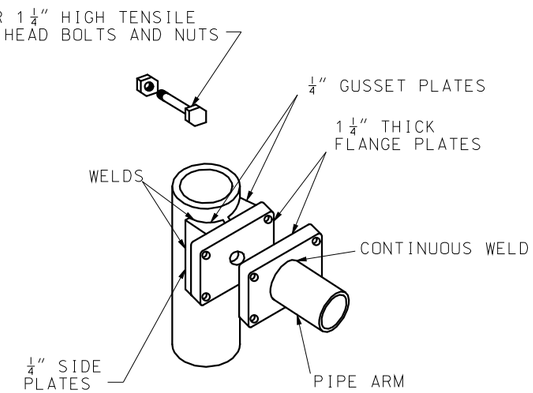

FOR POLE DIAMETER UNDER 12"

ARM ATTACHMENT

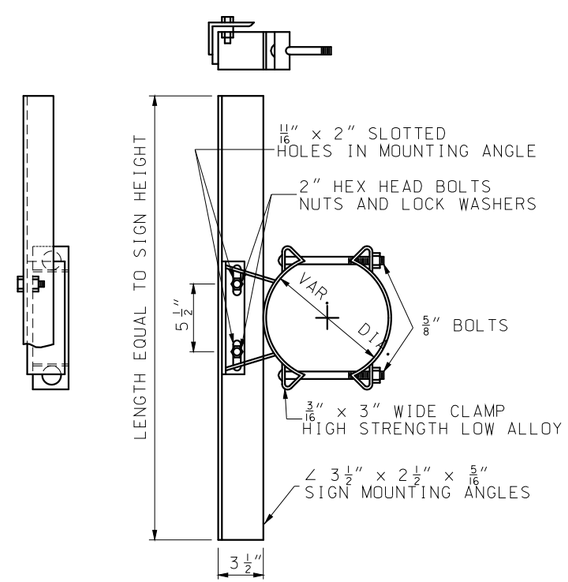

GALVANIZED SIGN BRACKET ASSEMBLY

GENERAL NOTE:

ALL SIGNS SHALL BE CENTERED VERTICALLY ABOUT THE HORIZONTAL ℄ OF THE ARM.

MISSOURI HIGHWAYS AND TRANSPORTATION COMMISSION
105 WEST CAPITOL
JEFFERSON CITY, MO 65102
1-888-ASK-MODOT (1-888-275-6636)

STATE OF MISSOURI
EILEEN H. RACKERS
NUMBER PE-28336
PROFESSIONAL ENGINEER
THIS SHEET HAS BEEN SIGNED, SEALED AND DATED ELECTRONICALLY.

HIGHWAY SIGNING
TUBULAR SUPPORT STEEL
TYPE C

DATE EFFECTIVE: 10/01/2016
DATE PREPARED: 8/11/2016

903.07J

SHEET NO. 1 OF 2

IF A SEAL IS PRESENT ON THIS SHEET IT HAS BEEN ELECTRONICALLY SEALED AND DATED.

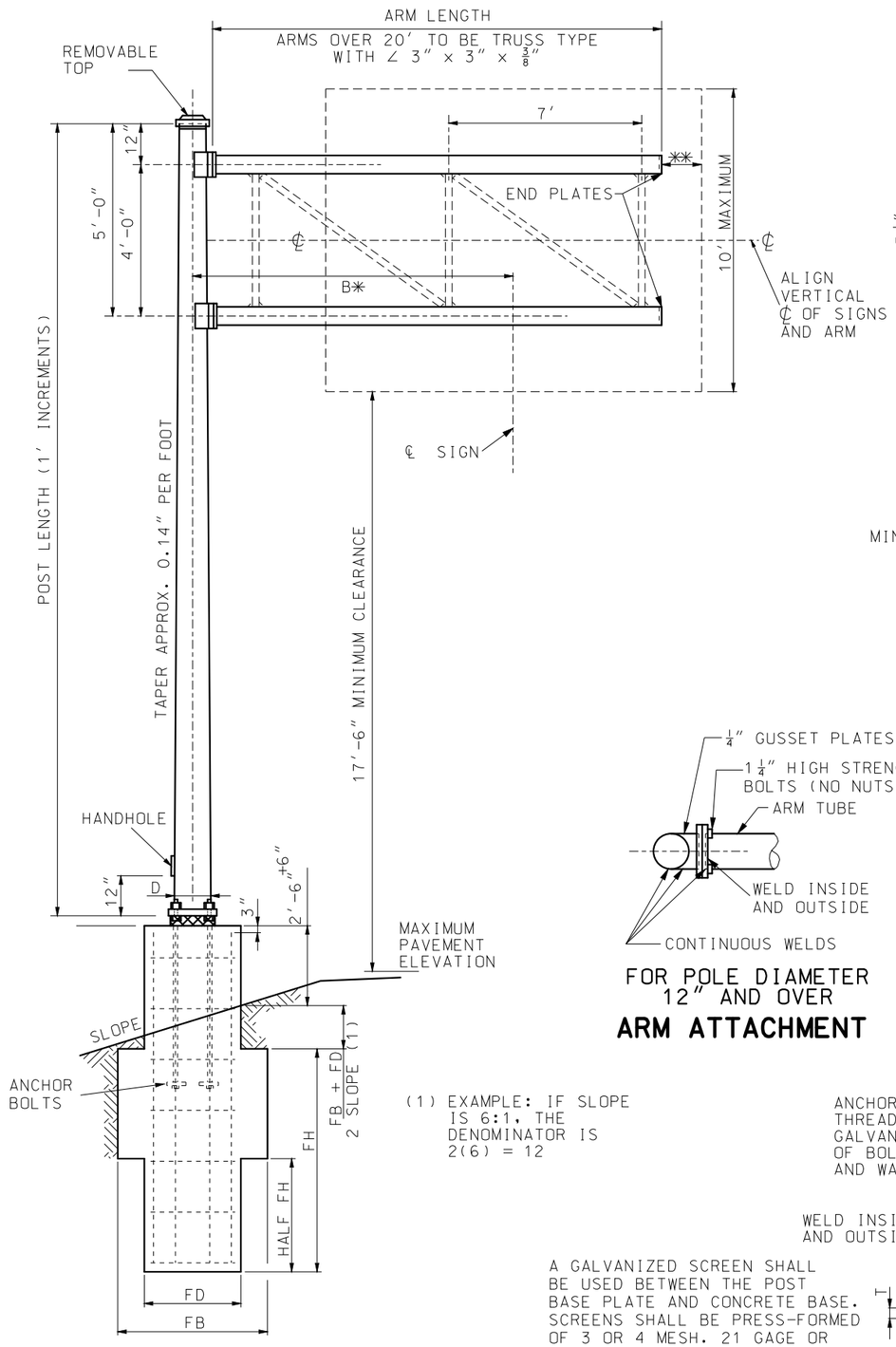

ELEVATION

DOUBLE ARM CANTILEVER

(1) EXAMPLE: IF SLOPE IS 6:1, THE DENOMINATOR IS 2(6) = 12

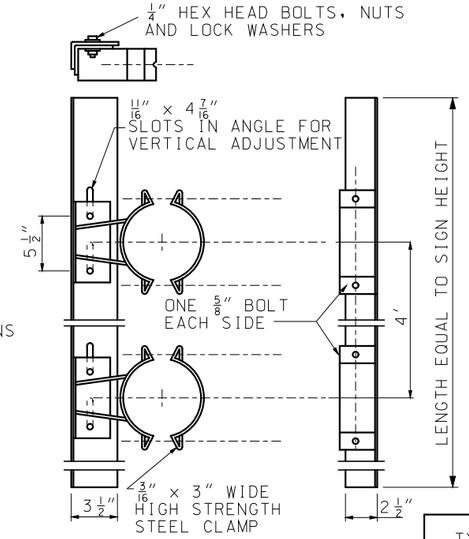

MINIMUM OF TWO BRACKETS REQUIRED ON SIGNS OVER 42″ IN LENGTH

GALVANIZED SIGN BRACKET ASSEMBLY

ESTIMATED QUANTITIES											
TYPE NUMBER	DIAMETER		CU. YD. CLASS B CONCRETE FOOTING				REINFORCING STEEL				
			FD SECTION		FB SECTION		#5		#4 (2)		TOTAL LBS.
	FD	FB	1′ DEPTH	1″ DEPTH	1′ DEPTH	1″ DEPTH	NO.	FT-IN	NO.	FT-IN	
C-2315	3′	4′	0.2618	0.0218	0.3729	0.0311	6	11′-3″	13	8′-9″	146
C-2318	3′-6″	5′	0.3563	0.0297	0.5507	0.0459	6	12′-2″	13	10′-4″	166
C-2018	3′-6″	5′	0.3563	0.0297	0.5507	0.0459	6	12′-8″	14	10′-4″	176

(2) ESTIMATED QUANTITY FOR REINFORCING STEEL IS BASED ON A 2:1 (H:V) SLOPE.

TYPE NUMBER	POST		ARM		B *	MAX. AREA
	GA	DIA.	GA	DIMENSIONS		SQ FT
C-2315-12	3	15″	7	7.5″ x 5.82″ x 12′	8′	130
C-2315-16	3	15″	7	9.0″ x 6.76″ x 16′	12′	120
C-2315-20	3	15″	3	10″ x 7.2″ x 20′	16′	115
C-2315-24	3	15″	3	11″ x 7.64″ x 24′	20′	100
C-2318-18	3	18″	7	9.0″ x 6.48″ x 18′	10′	145
C-2318-22	3	18″	7	11″ x 7.92″ x 22′	14′	150
C-2318-26	3	18″	7	12.5″ x 8.86″ x 26′	18′	150
C-2018-24	0	18″	7	12.5″ x 9.14″ x 24′	14′	205
C-2018-28	0	18″	3	12.5″ x 8.58″ x 28′	18′	215
C-2018-34	0	18″	0	13″ x 8.24″ x 34′	24′	190

SIGN HT. (IN.)	MAX. LIN. FT. OF SIGN WIDTH PER BRACKET
	2 CLAMP TYPE
42	16
48	16
60	16
72	15
84	11
96	6
108	4
120	3

* FOR SIGNS WITH SIGN AREAS LESS THAN THE MAXIMUM LISTED IN THE TABLE ABOVE, B CAN BE RECALCULATED USING THE FOLLOWING EQUATION:

$$\left(\text{MAX. B FOR TRUE SIGN AREA}\right) \leq \frac{\left(\text{MAX SIGN AREA}\right) \times \left(\text{MAX. B WITH MAX. SIGN AREA}\right)}{\left(\text{TRUE SIGN AREA}\right)}$$

** THE CALCULATED VALUE OF B CANNOT RESULT IN A DISTANCE GREATER THAN 1/4 OF THE SIGN WIDTH

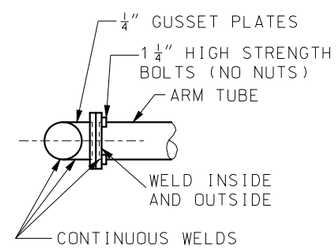

FOR POLE DIAMETER 12″ AND OVER

ARM ATTACHMENT

POST BASE DIMENSIONS													
TYPE NUMBER	Y	X	E	F	H	P	R	S	T	ANCHOR BOLTS	FOOTING		
											FH	FD	FB
C-1710 & C-1310	13 1/2″	17 1/2″	7″	9 9/16″	1 3/4″	3 3/4″	3 1/8″	14 1/8″	1 1/2″	1 1/2″ x 60″	5′	2′	4′
C-2315	22″	28 5/8″	8 1/2″	15 1/2″	2 3/8″	4 3/4″	4 5/8″	23″	2″	2″ x 96″	7′	3′	4′
C-2318	25 1/2″	33″	8 1/2″	18″	2 3/8″	4 3/4″	5 1/2″	26 1/2″	2″	2″ x 96″	7′-6″	3′-6″	5′
C-2018	25 1/2″	33″	9 1/2″	18″	2 5/8″	5 1/2″	5 1/2″	26 1/2″	2 1/2″	2 1/4″ x 96″	8′	3′-6″	5′

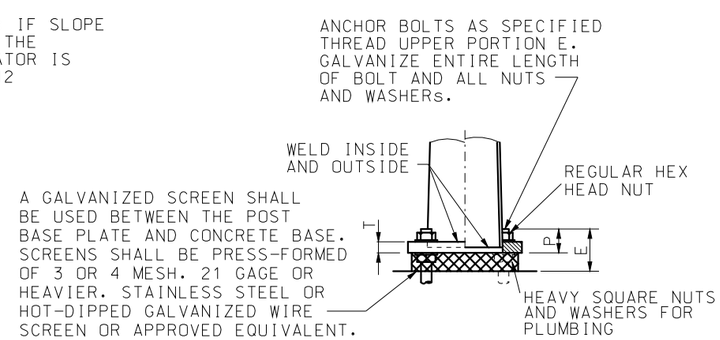

DETAIL A
ELEVATION

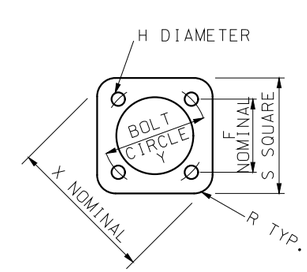

PLAN

POST BASE DETAIL

MISSOURI HIGHWAYS AND TRANSPORTATION COMMISSION
105 WEST CAPITOL
JEFFERSON CITY, MO 65102
1-888-ASK-MODOT (1-888-275-6636)

STATE OF MISSOURI
EILEEN H. RACKERS
NUMBER PE-28336
PROFESSIONAL ENGINEER
THIS SHEET HAS BEEN SIGNED, SEALED AND DATED ELECTRONICALLY.

HIGHWAY SIGNING
TUBULAR SUPPORT STEEL
TYPE C

DATE EFFECTIVE: 10/01/2016
DATE PREPARED: 8/11/2016

903.07J

SHEET NO. 2 OF 2

IF A SEAL IS PRESENT ON THIS SHEET IT HAS BEEN ELECTRONICALLY SEALED AND DATED.