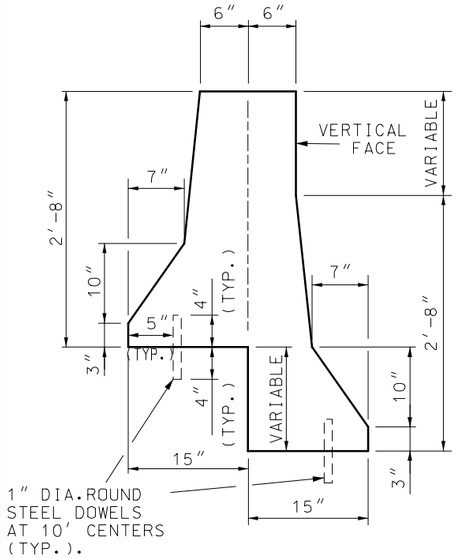

TYPICAL VIEW
BARRIER FOR
STEPPED PAVEMENT

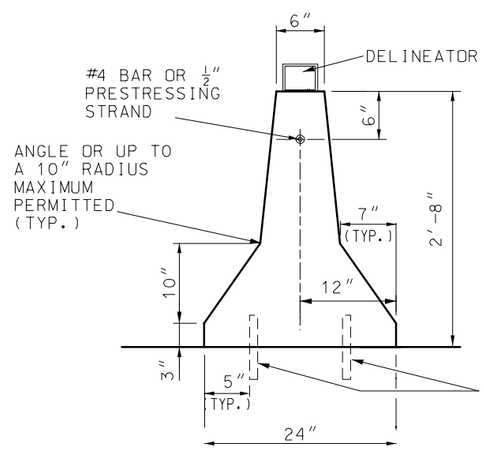

TYPICAL VIEW
TYPE A – TWO TRAFFIC FACES

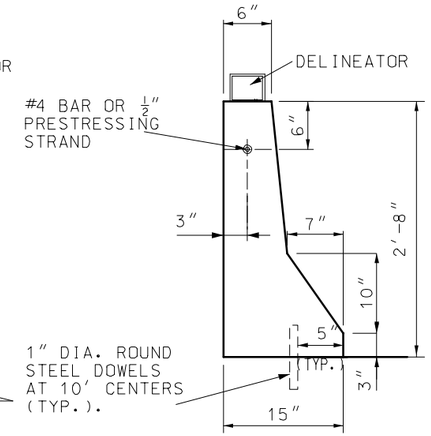

TYPICAL VIEW
TYPE B – ONE TRAFFIC FACE

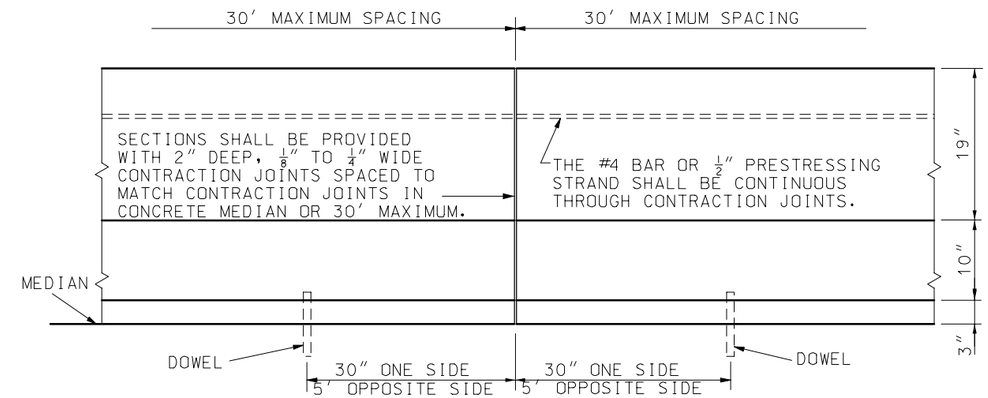

ELEVATION

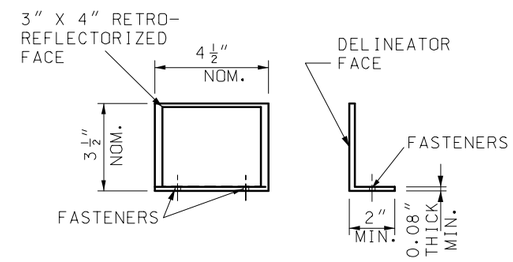

DELINEATOR

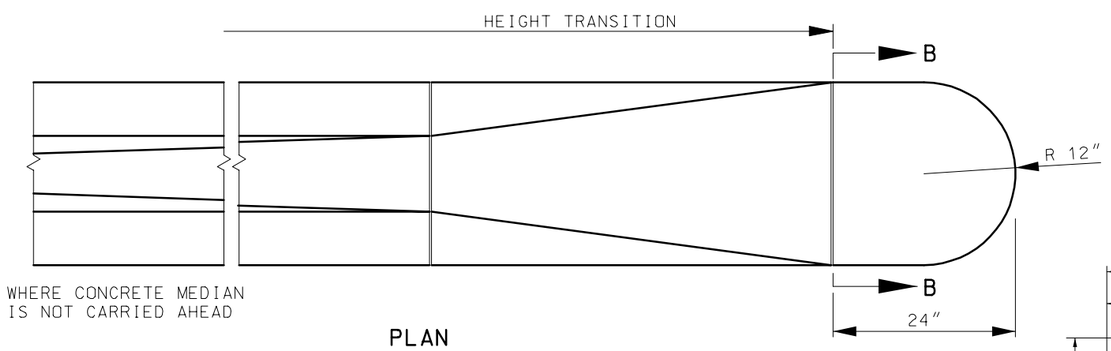

PLAN

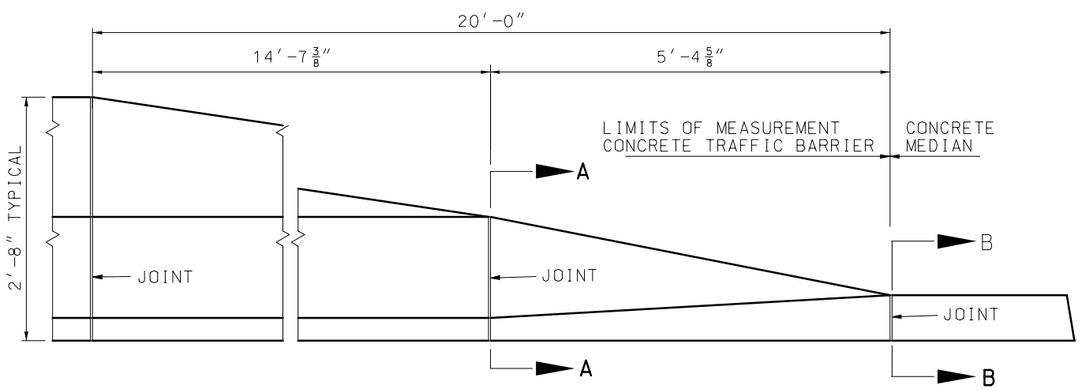

ELEVATION
BARRIER HEIGHT TRANSITION

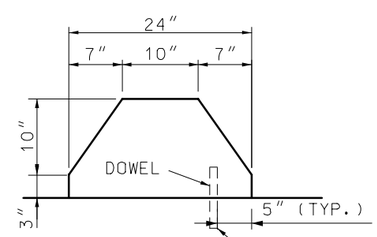

SECTION A–A

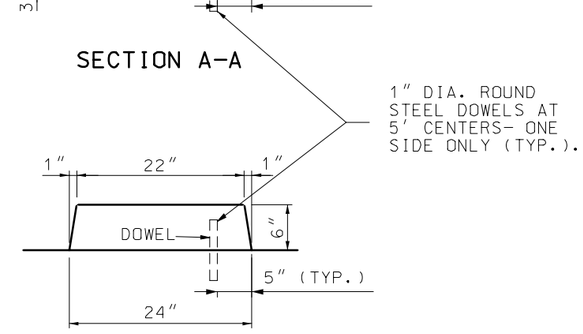

SECTION B–B

GENERAL NOTES:

HEIGHT TRANSITIONS SHALL NOT BE USED IN LOCATIONS WHERE THE POSTED SPEED IS GREATER THAN 35 MPH.

ALL TOP AND END EDGES SHALL BE CHAMFERED ¾ INCH.

EXPANSION JOINTS SHALL BE PROVIDED IN THE BARRIER TO MATCH EXPANSION JOINTS IN PAVEMENT.

MISSOURI HIGHWAYS AND TRANSPORTATION COMMISSION

PERMANENT CONCRETE TRAFFIC BARRIER

TYPE A AND B

DATE:_____ EFFECTIVE: 07-01-2004 **617.10C** 1/7

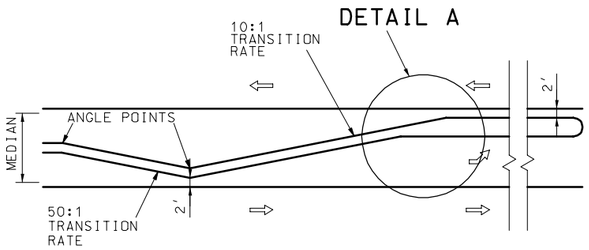

PLAN

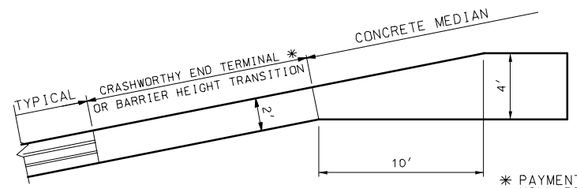

✳ PAYMENT FOR THE END TERMINAL WILL BE CONSIDERED FULL COMPENSATION FOR END TERMINAL, BACKUP ASSEMBLIES, OR OTHER ITEMS NECESSARY FOR PROPER INSTALLATION AS REQUIRED BY THE MANUFACTURER.

DETAIL A

LEFT TURN LANE TRANSITION

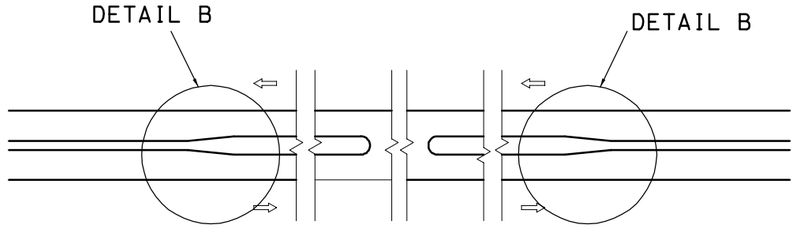

PLAN

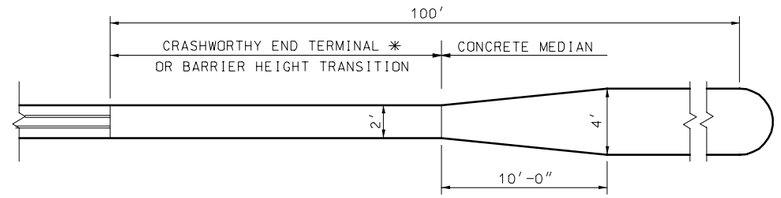

DETAIL B

MEDIAN OPENING TRANSITION

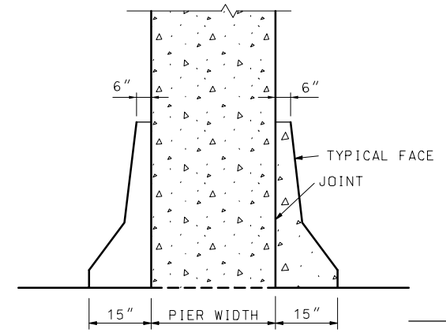

SECTION C-C

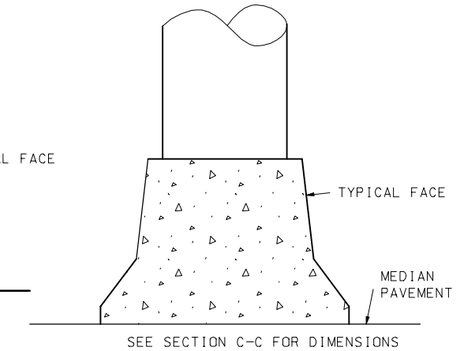

SECTION B-B

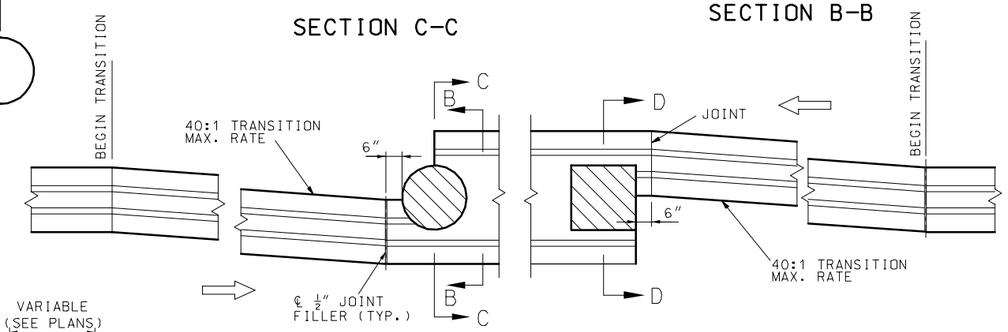

PLAN

TRANSITION DETAILS FOR PIER PROTECTION

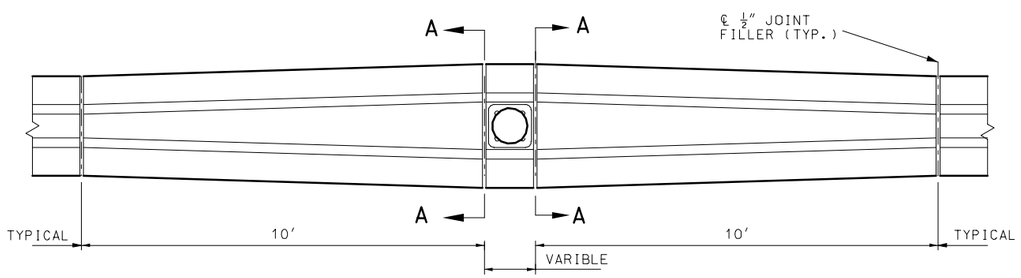

PLAN

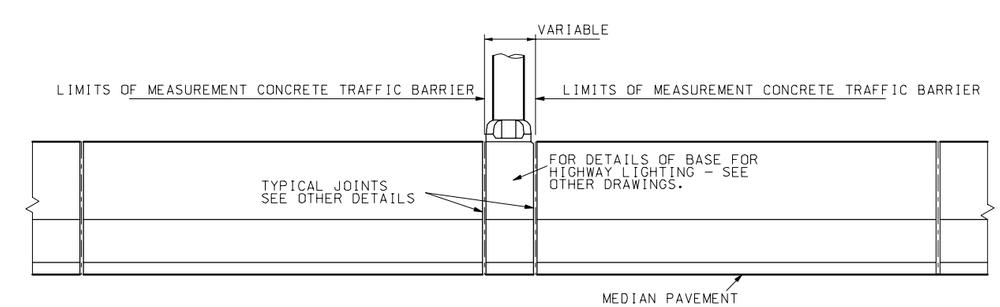

ELEVATION

TRANSITION DETAILS FOR MEDIAN LIGHTING

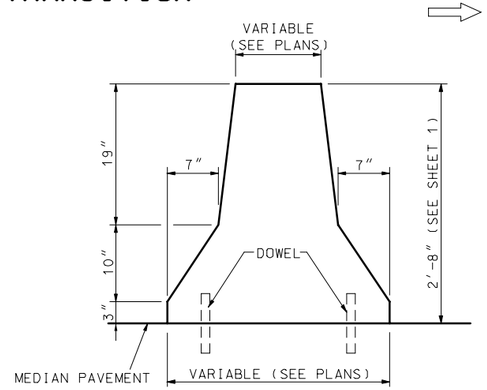

SECTION A-A

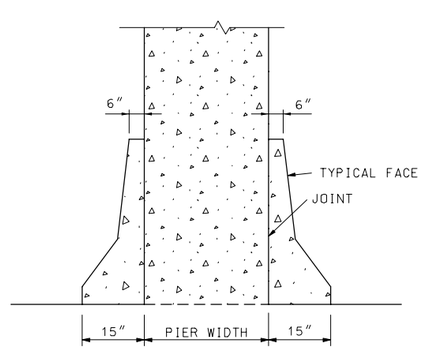

SECTION D-D

NOTES:

FOR DETAILS AND LOCATION OF DOWELS, SEE SHEET 1.

JOINT SHALL BE TWO LAYERS OF 55 LB. SMOOTH ROLL ROOFING TO FORM JOINT BETWEEN PIER AND BARRIER. IN SEISMIC AREAS, A ONE-INCH JOINT WITH JOINT FILLER AND SEALER SHALL BE USED.

MISSOURI HIGHWAYS AND TRANSPORTATION COMMISSION			
	PERMANENT CONCRETE TRAFFIC BARRIER TYPE A AND B		
DATE:_____	EFFECTIVE: 07-01-2004	617.10C	2/7

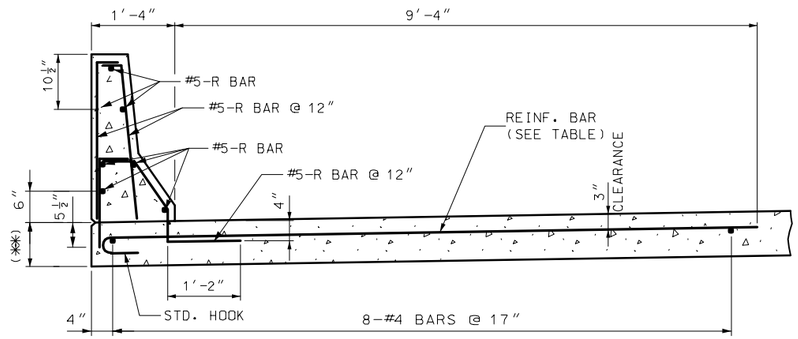

PART SECTION THRU PAVEMENT

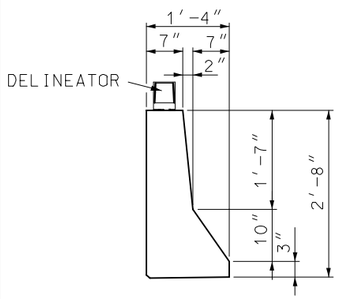

TYPE B (MOD.) TYPICAL SECTION

TABLE OF TRANSVERSE PAVEMENT REINFORCEMENT	
PAVEMENT THICKNESS ✱✱	BAR SIZE & SPACING
10″, 11″	#5 @ 6″
12″, 13″, 14″	#6 @ 12″
≥ 15″	#6 @ 12″

NOTES:

ALL REINFORCING STEEL SHALL BE EPOXY COATED.

NO DIRECT PAYMENT WILL BE MADE FOR REINFORCING STEEL

MINIMUM CLEARANCE TO REINFORCING STEEL SHALL BE 1-1/2″, UNLESS OTHERWISE SHOWN.

✱✱ SEE ROADWAY PAVEMENT DESIGN.

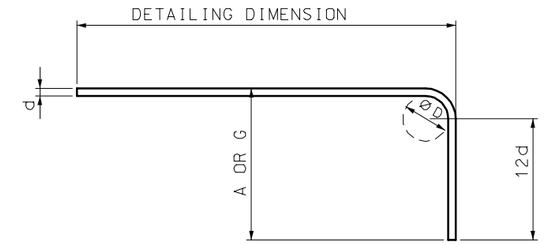

90° HOOKS

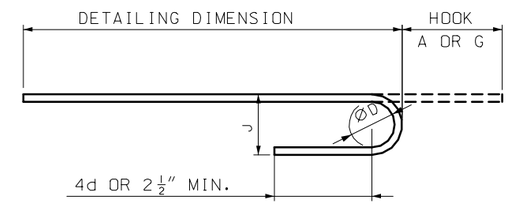

180° HOOKS

END HOOK DIMENSIONS				
BAR SIZE	D	ALL GRADES		
		180° HOOKS		90° HOOKS
	(IN.)	A OR G	J	A OR G
#5	3¾″	7″	5″	10″
#6	4½″	8″	6″	12″

ALL STANDARD HOOKS AND BENDS OTHER THAN 180° TO BE BENT WITH THE SAME PROCEDURE AS FOR 90° STANDARD HOOKS.

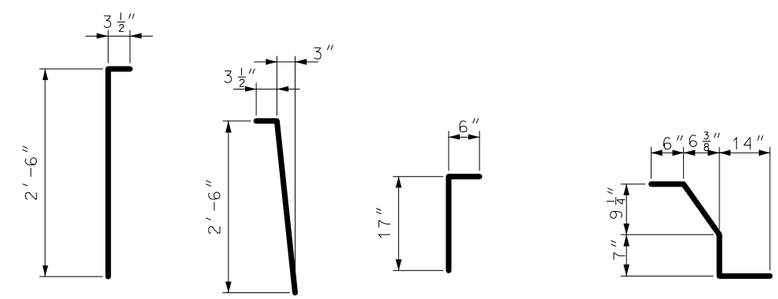

#5-R1 #5-R2 #5-R3 #5-R4

NOTES:

TYPE B (MODIFIED) SHALL BE USED ONLY AT LOCATIONS SHOWN IN PLANS.

FOR DELINEATOR DETAILS, SEE SHEET 1.

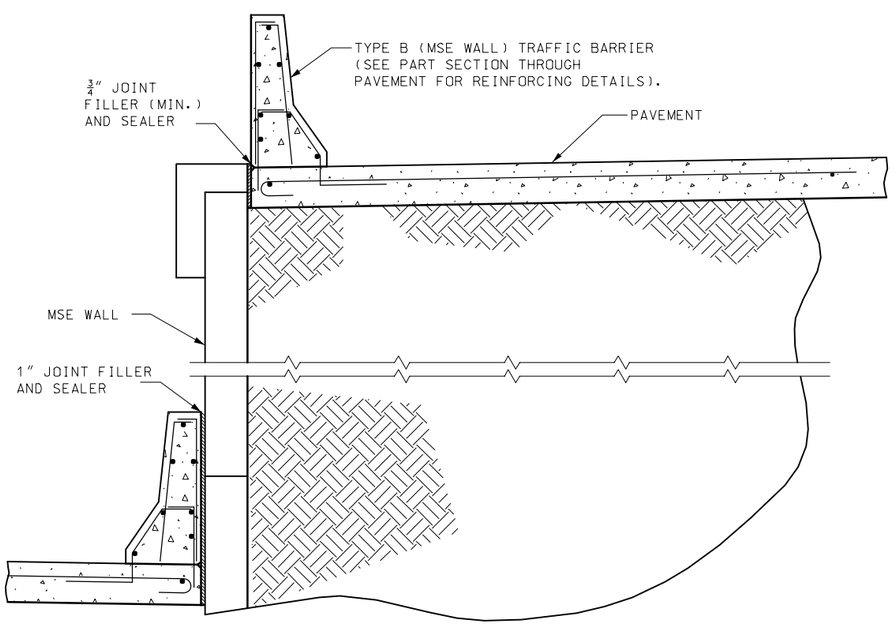

TYPE B (MSE WALL) TRAFFIC BARRIER ON TOP OF MSE WALL

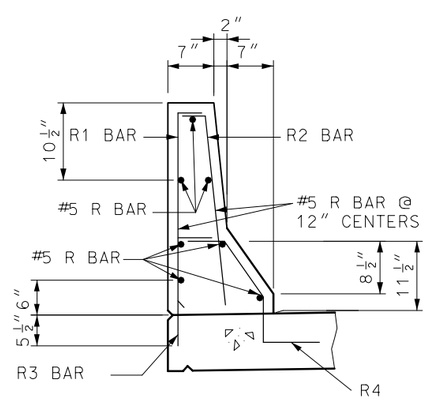

PART SECTION SHOWING REINFORCEMENT

MISSOURI HIGHWAYS AND TRANSPORTATION COMMISSION

PERMANENT CONCRETE TRAFFIC BARRIER

TYPE B (MSE WALL)

DATE:_____ EFFECTIVE: 07-01-2004 **617.10C** 3/7

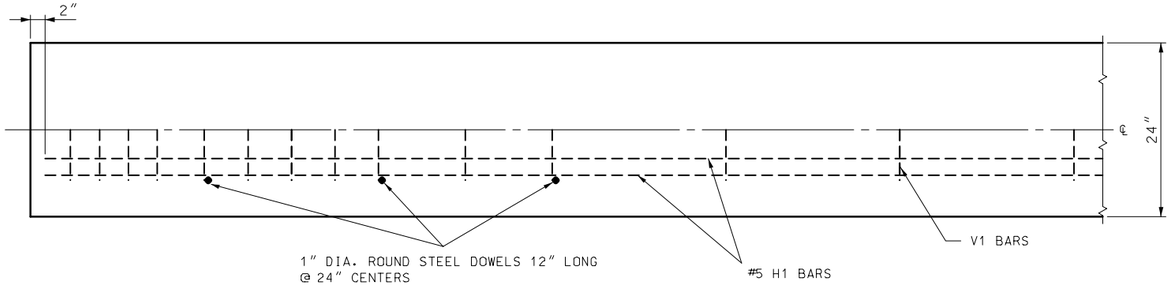

PLAN VIEW
(SYMMETRICAL ABOUT CENTER LINE)

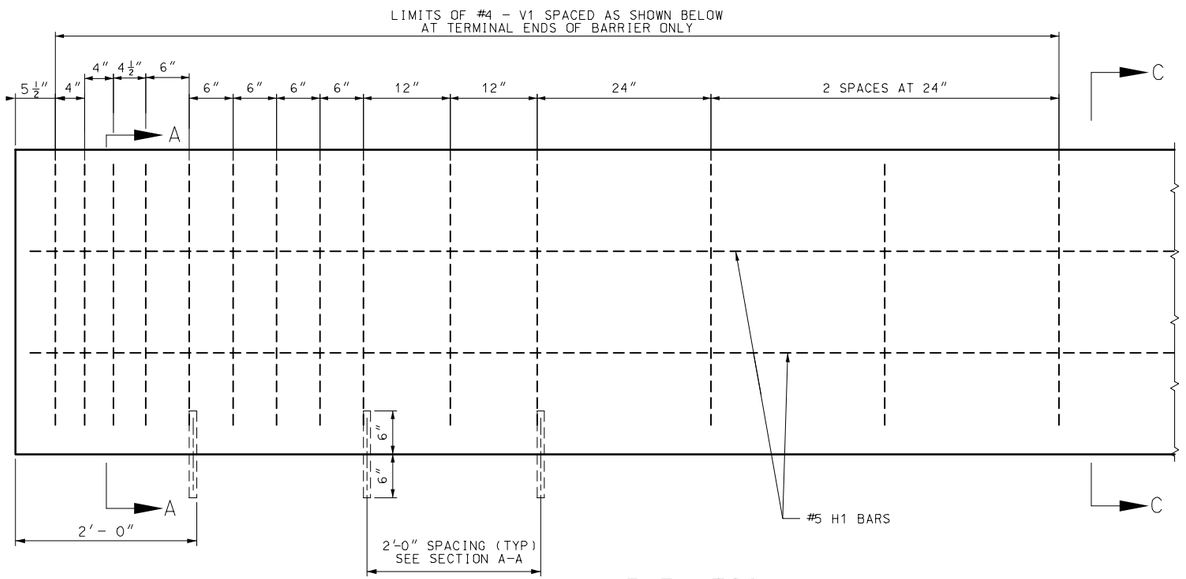

ELEVATION

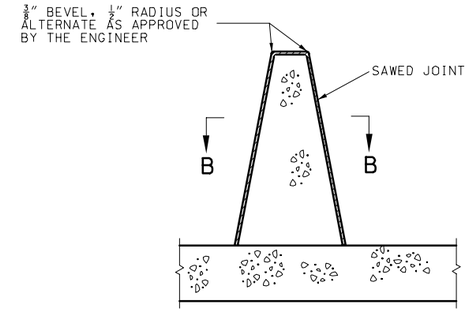

SECTION THROUGH SAWED JOINT

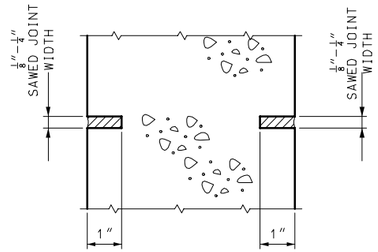

SECTION B–B

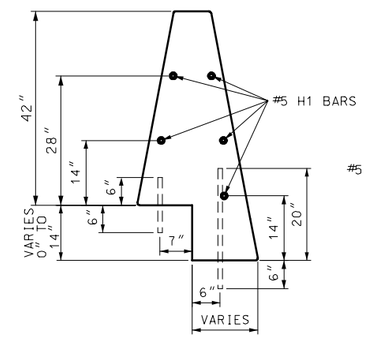

SECTION C–C
(STEPPED PAVEMENT)

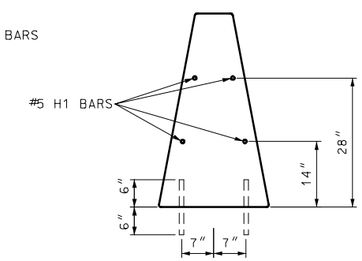

SECTION C–C
(NORMAL PAVEMENT)

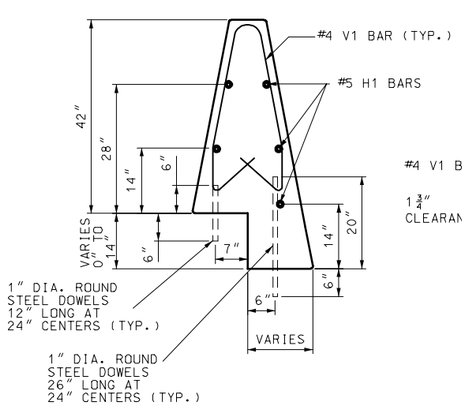

SECTION A–A
(STEPPED PAVEMENT)

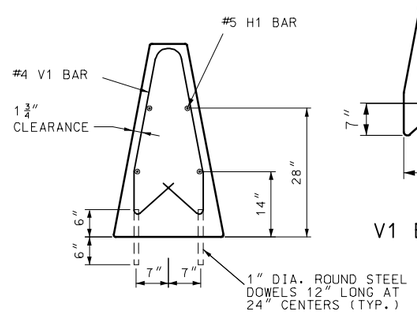

SECTION A–A
(NORMAL PAVEMENT)

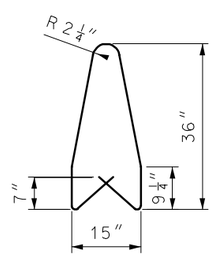

V1 BAR (#4)

REINFORCING DETAILS

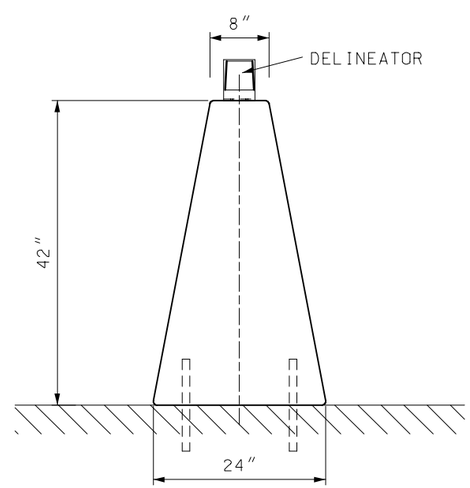

TYPE C
TYPICAL SECTION

NOTES:

BAR SPLICES SHALL BE A MINIMUM OF 24 TIMES THE NOMINAL DIAMETER OF THE BAR.

ANY REINFORCING BAR INSTALLATION METHOD DEVISED BY THE CONTRACTOR AND APPROVED BY THE ENGINEER THAT WILL ASSURE THE LONGITUDINAL REINFORCING STEEL WILL BE POSITIONED ±½ INCH AS DIMENSIONED WILL BE SATISFACTORY.

THE CONTRACTOR HAS THE OPTION TO SLIP-FORM THE BARRIER. IN WHICH CASE, ADDITIONAL REINFORCEMENT MAY BE TIED TO THE UPPER TWO-THIRDS OF THE REINFORCING CAGE TO PROVIDE BRACING.

SAWED JOINTS SHALL BE LOCATED AT PAVEMENT TRANSVERSE JOINTS.

FOR DELINEATOR DETAILS, SEE SHEET 1.

MISSOURI HIGHWAYS AND TRANSPORTATION COMMISSION

PERMANENT CONCRETE TRAFFIC BARRIER
TYPE C

DATE:_____ | EFFECTIVE: 07-01-2004 | **617.10C** | 4/7

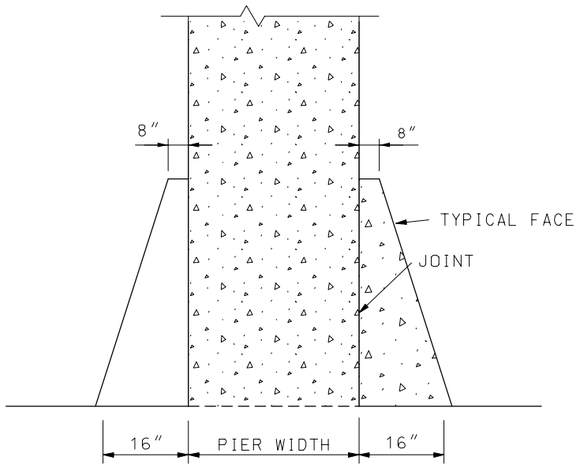

SECTION A–A

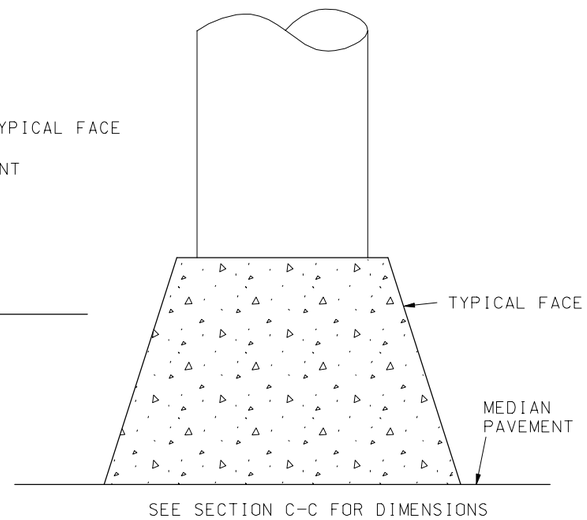

SECTION B–B

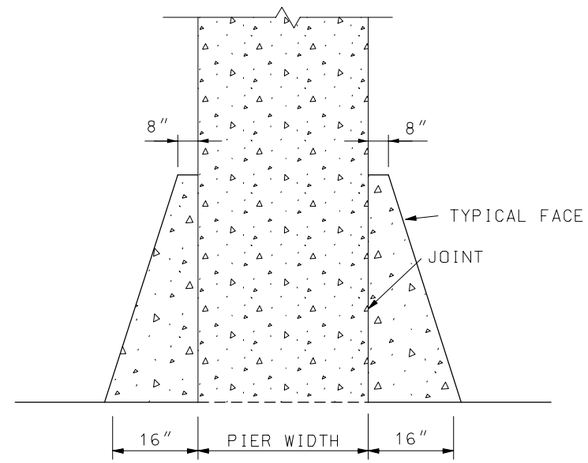

SECTION C–C

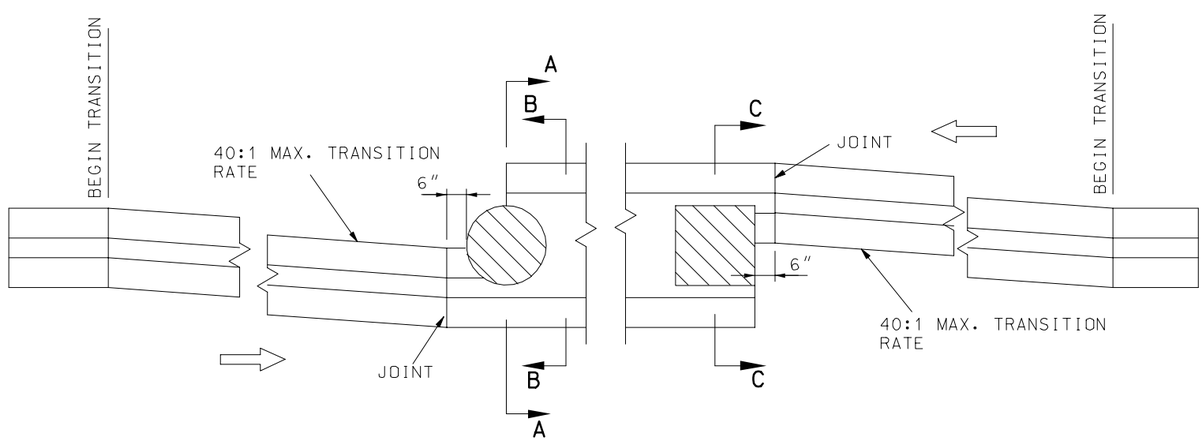

PLAN

TRANSITION DETAILS FOR PIER PROTECTION

GENERAL NOTE:

JOINT SHALL BE TWO LAYERS OF 55 LB. SMOOTH ROLL ROOFING TO FORM JOINT BETWEEN PIER AND BARRIER. IN SEISMIC AREAS, A ONE-INCH JOINT WITH JOINT FILLER AND SEALER SHALL BE USED.

MISSOURI HIGHWAYS AND TRANSPORTATION COMMISSION

PERMANENT CONCRETE TRAFFIC BARRIER

TYPE C

DATE:_____ EFFECTIVE: 07-01-2004 **617.10C** 5/7

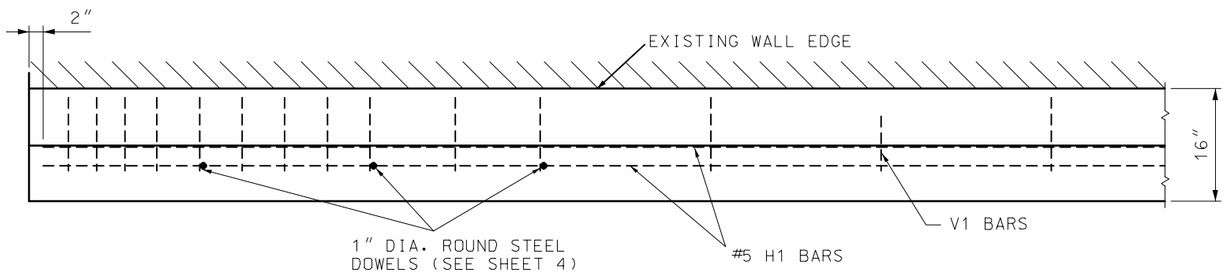

PLAN VIEW

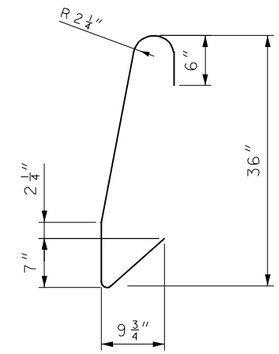

V1 BAR (#4)

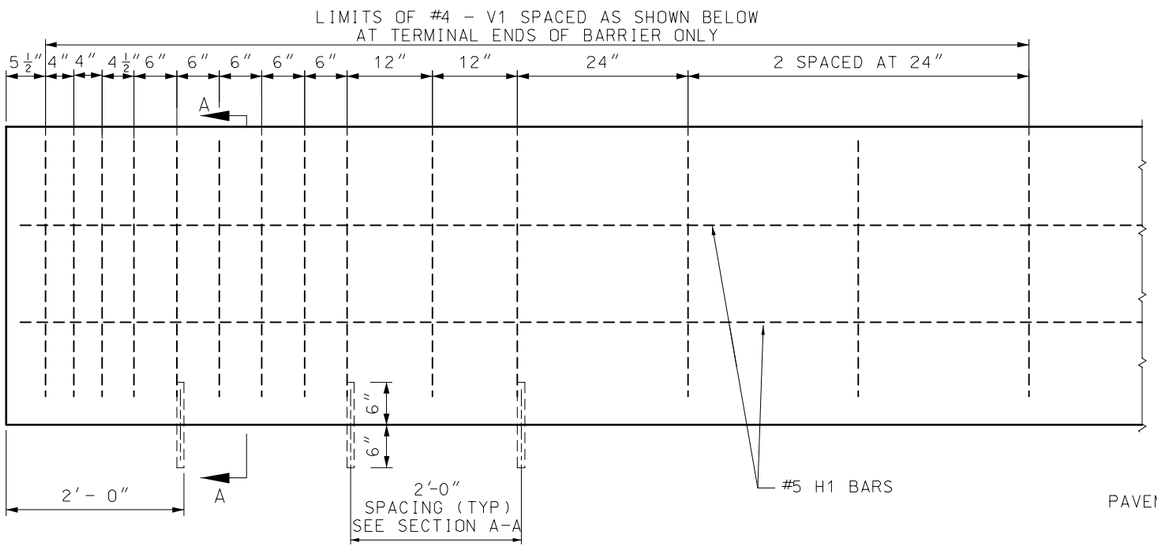

ELEVATION

REINFORCING DETAILS

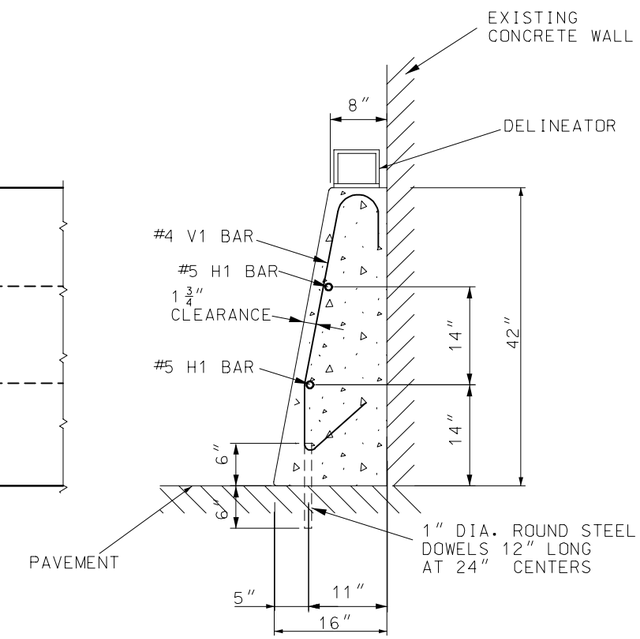

SECTION A-A

NOTES:

BAR SPLICES SHALL BE A MINIMUM OF 24 TIMES THE NOMINAL DIAMETER OF THE BAR.

ANY METHOD DEVISED BY THE CONTRACTOR AND APPROVED BY THE ENGINEER THAT WILL ASSURE THE LONGITUDINAL REINFORCING STEEL WILL BE POSITIONED ± 1/2 INCH AS DIMENSIONED WILL BE SATISFACTORY.

THE CONTRACTOR HAS THE OPTION TO SLIP-FORM THE BARRIER. IN WHICH CASE, ADDITIONAL REINFORCEMENT MAY BE TIED TO THE UPPER TWO-THIRDS OF THE REINFORCING CAGE TO PROVIDE BRACING.

THIS BARRIER SHALL NOT BE USED TO SUPPORT HIGHWAY LIGHTING POLES.

THIS BARRIER SHALL NOT BE USED FOR BRIDGE ROADWAY APPLICATIONS.

SAWED JOINTS SHALL BE LOCATED AT PAVEMENT TRANSVERSE JOINTS.

TYPE D SHALL BE USED ONLY AT LOCATIONS SHOWN ON PLANS.

FOR DELINEATOR DETAILS, SEE SHEET 1.

MISSOURI HIGHWAYS AND TRANSPORTATION COMMISSION

PERMANENT CONCRETE TRAFFIC BARRIER

TYPE D

DATE:_____ | EFFECTIVE: 07-01-2004 | **617.10C** | 6/7

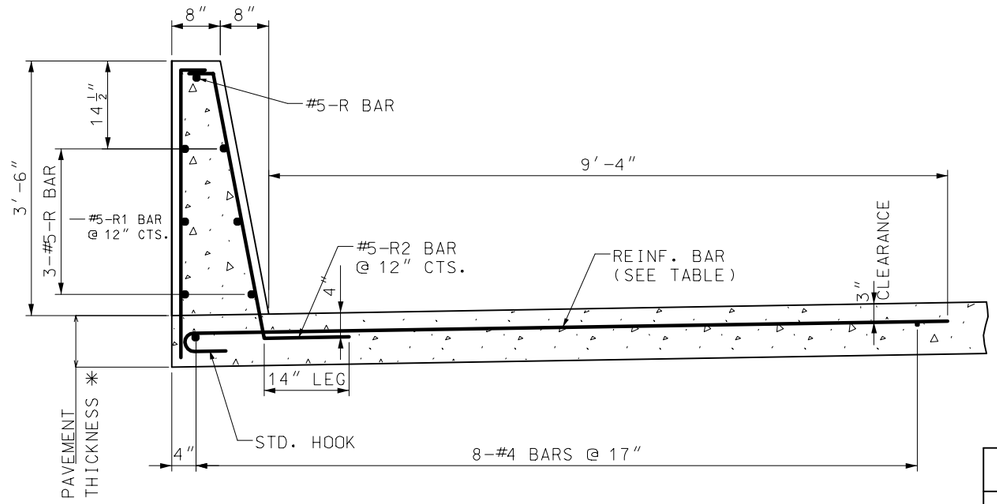

PART SECTION THRU PAVEMENT

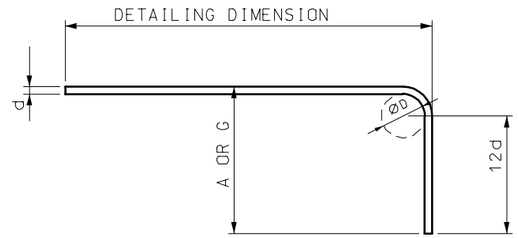

90° HOOKS

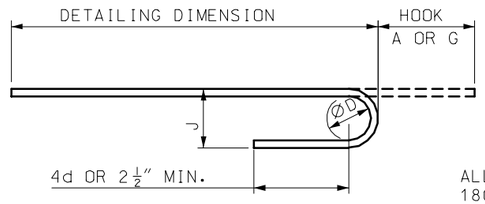

180° HOOKS

END HOOK DIMENSIONS				
BAR SIZE	D	ALL GRADES		
		180° HOOKS		90° HOOKS
	(IN.)	A OR G	J	A OR G
#3	2¼″	5″	3″	6″
#4	3″	5″	4″	8″
#5	3¾″	7″	5″	10″
#6	4½″	8″	6″	12″
#7	5¼″	10″	7″	14″
#8	6″	11″	8″	18″
#9	5½″	15″	11¾″	19″
#10	10¾″	17″	13¼″	22″
#11	12″	19″	14¾″	2′-0″
#14	18¼″	2′-3″	21¾″	2′-7″

ALL STANDARD HOOKS AND BENDS OTHER THAN 180° TO BE BENDT WITH THE SAME PROCEDURE AS FOR 90° STANDARD HOOKS.

TABLE OF TRANSVERSE PAVEMENT REINFORCEMENT	
PAVEMENT THICKNESS ✳✳	BAR SIZE & SPACING
10″ 11″	#5 @ 6″
12″, 13″, 14″	#6 @ 12″
≥ 15″	#6 @ 12″

NOTES:

MINIMUM CLEARANCE TO REINFORCING STEEL SHALL BE 1-1/2″, UNLESS OTHERWISE SHOWN.

✳✳ SEE ROADWAY PAVEMENT DESIGN.

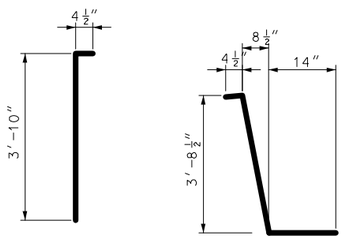

#5 R1 #5 R2

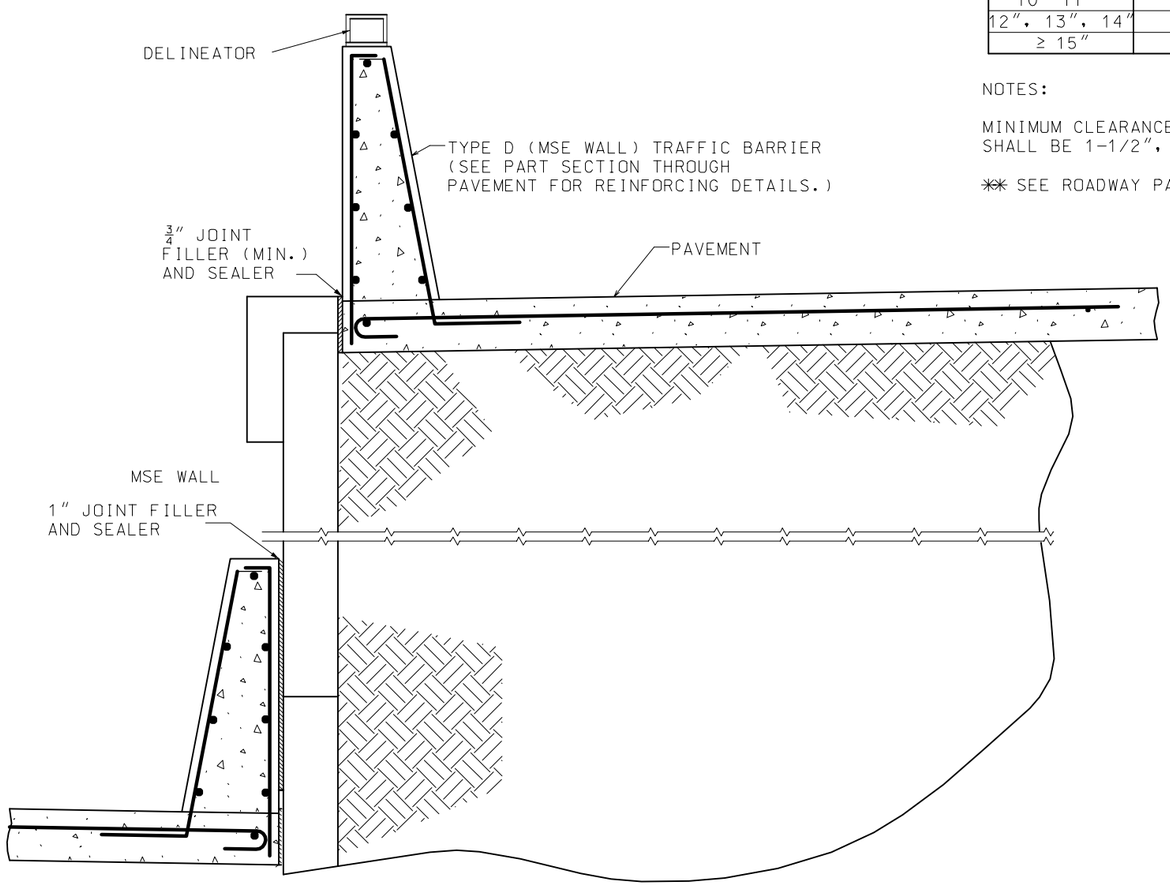

TYPE D (MSE WALL) TRAFFIC BARRIER ON TOP OF MSE WALL

NOTES:

TYPE D (MODIFIED) SHALL BE USED ONLY AT LOCATIONS SHOWN ON PLANS.

FOR DELINEATOR DETAILS, SEE SHEET 1.

MISSOURI HIGHWAYS AND TRANSPORTATION COMMISSION

PERMANENT CONCRETE TRAFFIC BARRIER
TYPE D (MSE WALL)

DATE:_____ EFFECTIVE: 07-01-2004 **617.10C** 7/7