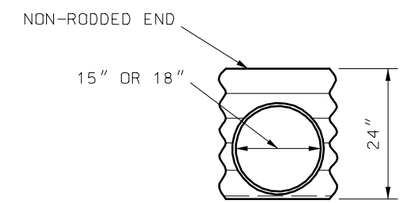

SECTION A-A

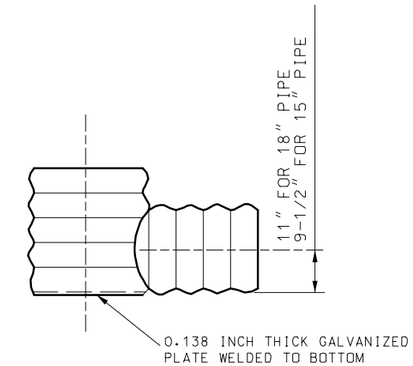

SECTION B-B

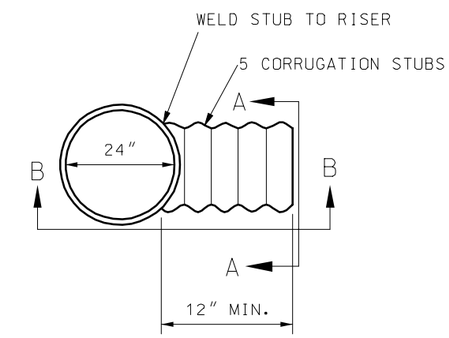

PLAN

METAL INLETS

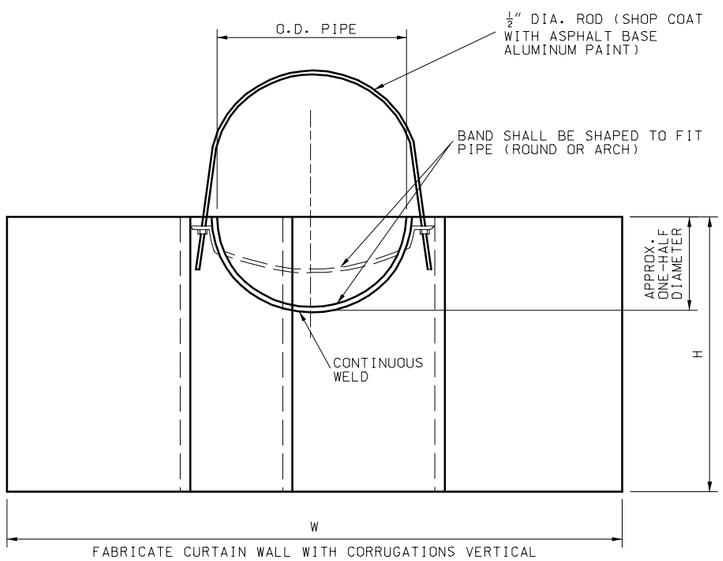

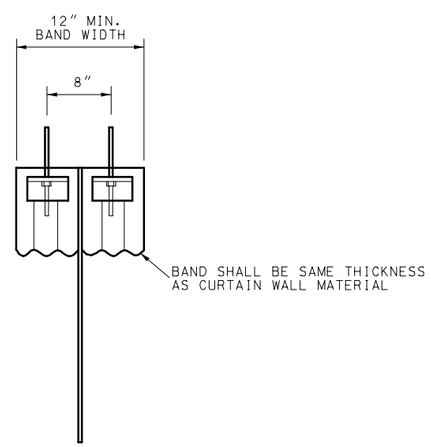

METAL CURTAIN WALL

TABLE FOR METAL CURTAIN WALL			
FOR ROUND OR ELLIPTICAL PIPE			
DIA. IN.	GALV. SHT. THICK IN.	W IN.	H IN.
18	0.064	72	35
21	0.064	72	35
24	0.064	72	40
30	0.064	84	40
36	0.079	84	49
42	0.079	96	49
48	0.079	96	49
54	0.079	120	58-1/2
60	0.109	120	58-1/2
66	0.109	132	58-1/2
72	0.109	132	68-1/2
78	0.138	132	68-1/2
84	0.138	144	68-1/2
FOR PIPE ARCH			
B-2	0.064	72	30
B-3	0.064	72	30
B-4	0.079	84	30
B-5	0.079	84	30
B-6	0.109	96	35
B-7	0.109	96	35
B-8	0.109	108	35
B-9	0.109	120	35
B-10	0.138	120	40
B-11	0.168	125	50
B-12	0.168	131	54

MISSOURI HIGHWAYS AND TRANSPORTATION COMMISSION

METAL CURTAIN WALL AND METAL INLETS

DATE:_____ EFFECTIVE:10-01-1998 **725.31C** 1/1