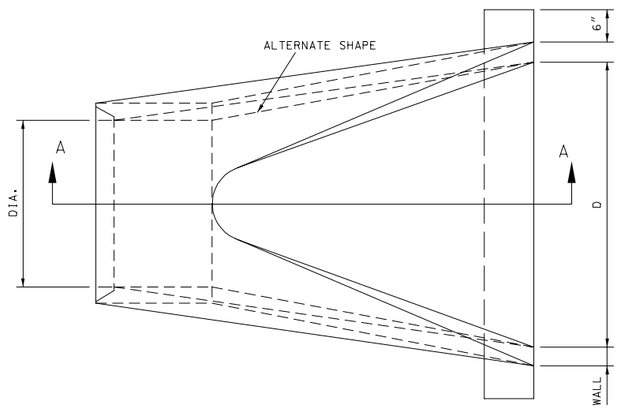

PLAN VIEW

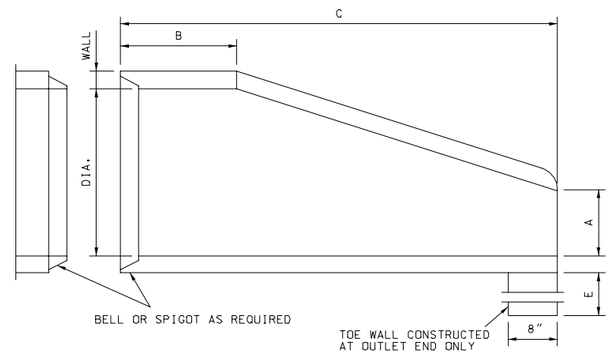

SECTION A-A

REINFORCEMENT					
ADJOINING PIPE DIA.	BARREL SECTION REINFORCEMENT			FLARE SECTION REINFORCEMENT (ONE LAYER ONLY IN CENTER OF WALL)	
	CIRCULAR		ELLIPTICAL		
	INNER CAGE SQ. IN./ LIN. FT.	OUTER CAGE SQ. IN./ LIN. FT.	SQ. IN./ LIN. FT.	AREA OF LONGITUDINAL SQ. IN./ LIN. FT.	AREA OF TRANSVERSE SQ. IN./ LIN. FT.
12"	0.07			0.048	0.048
15"	0.07			0.054	0.054
18"	0.07		0.07	0.060	0.060
21"	0.07		0.07	0.066	0.066
24"	0.07		0.07	0.072	0.072
27"	0.13		0.11	0.078	0.078
30"	0.14		0.12	0.084	0.084
33"	0.15		0.13	0.090	0.090
36"	0.12	0.09	0.13	0.096	0.096
42"	0.15	0.12	0.17	0.108	0.108
48"	0.18	0.14	0.20	0.120	0.120
54"	0.22	0.16	0.24	0.132	0.132
60"	0.25	0.19	0.28	0.144	0.144
66"	0.31	0.23	0.34	0.156	0.156
72"	0.35	0.21	0.39	0.170	0.170
78"	0.40	0.24	0.44	0.185	0.185
84"	0.46	0.28	0.51	0.205	0.205

DIMENSIONS						
DIA.	WALL	A	B MIN.	C MIN.	D	E
12"	2"	4"	4'-0"	6'	2'-0"	18"
15"	2-1/4"	6"	3'-10"	6'	2'-6"	18"
18"	2-1/2"	9"	3'-10"	6'	3'-0"	18"
21"	2-3/4"	9"	3'-2"	6'	3'-6"	18"
24"	3"	9-1/2"	2'-6"	6'	4'-0"	24"
27"	3-1/4"	10-1/2"	2'-1"	6'	4'-6"	24"
30"	3-1/2"	1'-0"	1'-7"	6'	5'-0"	24"
33"	3-3/4"	1'-2"	1'-7"	6'	5'-6"	24"
36"	4"	1'-3"	2'-10"	8'	6'-0"	24"
42"	4-1/2"	1'-9"	2'-11"	8'	6'-6"	24"
48"	5"	2'-0"	2'-2"	8'	7'-0"	24"
54"	5-1/2"	2'-3"	2'-11"	8'	7'-6"	36"
60"	6"	2'-6"	3'-3"	8'	8'-0"	36"
66"	6-1/2"	2'-0"	1'-9"	8'	8'-6"	36"
72"	7"	2'-0"	2'-9"	10'	9'-0"	36"
78"	7-1/2"	2'-3"	2'-3"	10'	9'-6"	36"
84"	8"	2'-6"	2'-0"	10'	10'-0"	36"

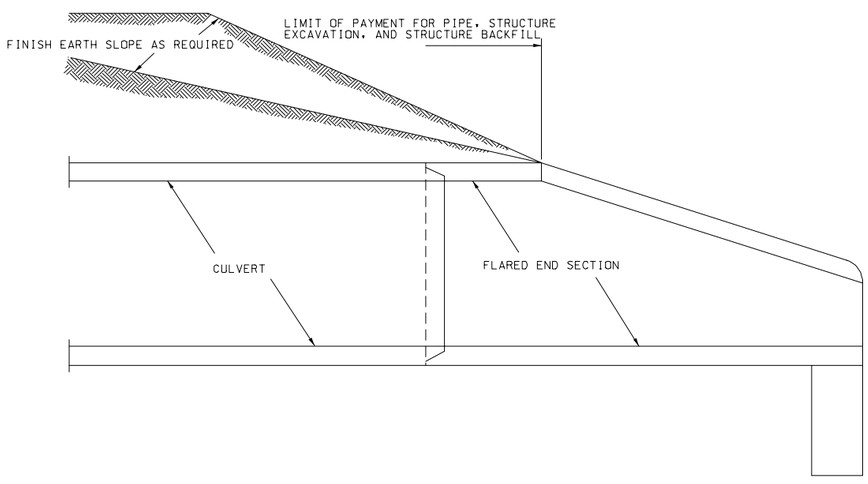

INSTALLATION DETAILS

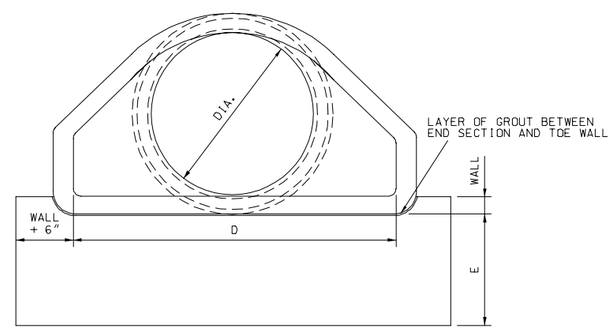

END VIEW

GENERAL NOTES:

SLIGHT VARIATIONS IN BOTH SHAPE AND DIMENSIONS FROM THOSE SHOWN MAY BE ACCEPTED IF APPROVED BY THE ENGINEER.

NOT MORE THAN THREE LIFT HOLES MAY BE DRILLED OR CAST IN THE END SECTION FOR HANDLING AND LAYING.

LIFT LUGS OR BARS WILL BE PERMITTED IN PRECAST TOE WALLS.

TOE WALLS MAY BE CAST-IN-PLACE OR PRECAST.

MISSOURI HIGHWAYS AND TRANSPORTATION COMMISSION

FLARED END SECTION

PRECAST CONCRETE

DATE:_____ | EFFECTIVE: 04-01-2003 | 732.00N | 1/2

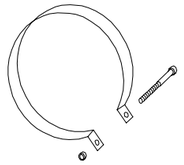

1 INCH WIDE 0.109" THICK CONNECTOR STRAP OF COMMERCIAL QUALITY STEEL. GALVANIZED WITH SAME WEIGHT COATING AS PIPE, AND 6" × ½" GALVANIZED BAND BOLT AND NUT. USE AS ALTERNATE ON TYPE 1 CONNECTION ONLY

CONNECTOR STRAP

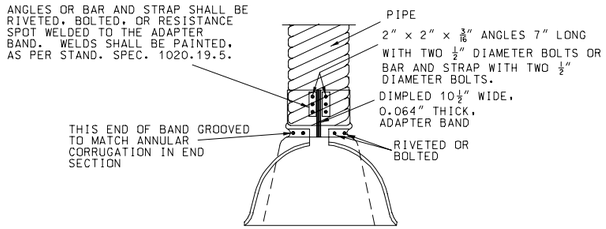

FOR 12" THRU 42" PIPE AND EQUIVALENT PIPE ARCH

TYPE 4 CONNECTION

END SECTIONS FOR ARCH PIPE										
TYPE	ARCH DIMENSIONS SPAN x RISE	DIAM. EQUIVALENT ROUND PIPE IN.	GALV. SHEET THICK IN.	DIMENSIONS IN. A 1" TOL.	B MAX	H 1" TOL.	L 1½" TOL.	W 2" TOL.	APPROXIMATE SLOPE (V:H) (1:SLOPE)	TOE PLATE IF SPECIFIED P, IN.
B1	SEE STANDARD PLAN 725.00	15	.064	6	9	6	19	30	2-1/8	40
B2		18	.064	7	11	6	23	36	2	46
B3		21	.064	8	12	6	28	42	2-1/8	52
B4		24	.064	18	16	6	32	48	2	58
B5		30	.079	10	16	6	39	60	1-7/8	70
B6 or B6A		36	.079	12	18	8	46	75	1-3/4	85
B7 or B7A		42	.109	13	21	9	53	85	1-7/8	107
B8 or B8A		48	.109	18	26	12	63	90	1-7/8	112
B9 or B9A		54	.109	18	30	12	70	102	1-7/8	124
B10 or B10A		60	.109	18	33	12	77	114	1-7/8	136
B11 or B11A		66	.109	18	36	12	77	126	1-5/8	148
B12 or B12A		72	.109	18	39	12	77	138	1-1/2	160

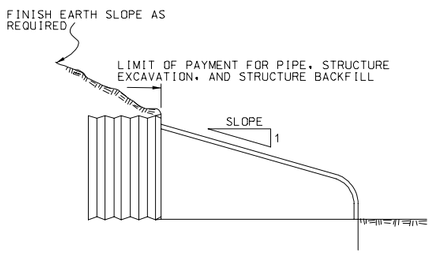

TYPICAL CROSS-SECTION

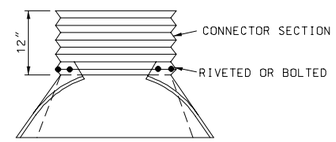

PERMISSIBLE FOR ALL SIZES

TYPE 3 CONNECTION

END SECTIONS FOR ROUND PIPE								
PIPE DIA IN.	GALV. SHEET THICK IN.	DIMENSIONS mm A 1" TOL.	B MAX.	H 1" TOL.	L 1½" TOL.	W 2" TOL.	APPROXIMATE SLOPE (V:H) (1:SLOPE)	TOE PLATE IF SPECIFIED P, IN.
12	.064	6	6	6	21	24	2-1/2	34
15	.064	7	8	6	26	30	2-1/2	40
18	.064	8	10	6	31	36	2-1/2	46
21	.064	9	12	6	36	42	2-1/2	52
24	.064	10	13	6	41	48	2-1/2	58
30	.079	12	16	8	51	60	2-1/2	70
36	.079	14	19	9	60	72	2-1/2	94
42	.109	16	22	11	69	84	2-1/2	106
48	.109	18	27	12	78	90	2-1/2	112
54	.109	18	30	12	84	102	2 or 2-1/4	124
60	.109	18	33	12	87	114	1-3/4 or 2	136
66	.109	18	36	12	87	120	1-1/2 or 2	144
72	.109	18	39	12	87	126	1-1/3 or 2	148
78	.109	18	42	12	87	132	1-1/4 or 1-1/2	154
84	.109	18	45	12	87	138	1-1/6 or 1-1/2	160

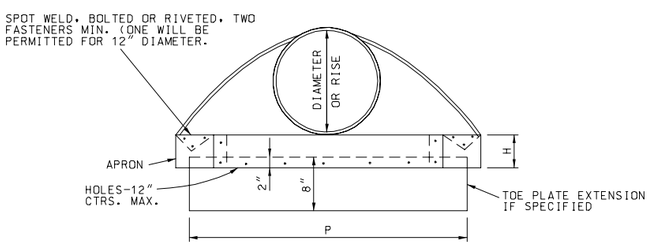

ELEVATION

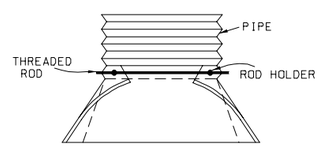

FOR 30" THRU 48" PIPE AND EQUIVALENT PIPE ARCH

TYPE 2 CONNECTION

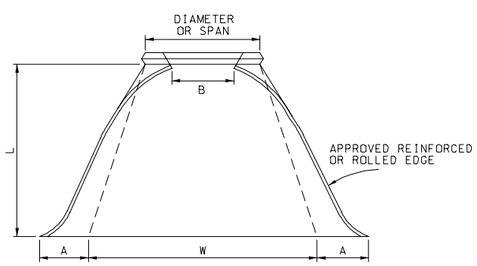

PLAN

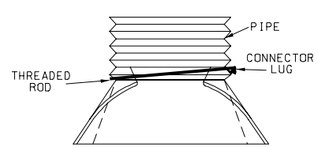

FOR 12" THRU 24" ROUND PIPE ONLY

TYPE 1 CONNECTION

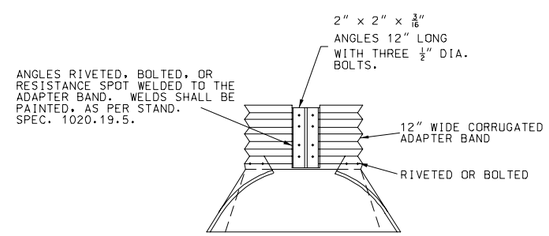

PERMISSIBLE FOR ALL SIZES THRU 84" PIPE AND B-12 OR B-12A PIPE ARCH

TYPE 5 CONNECTION

END SECTION FOR PIPE AND PIPE ARCH

GENERAL NOTES:

MINOR VARIATIONS OF DETAIL AND DIMENSIONS WILL BE ACCEPTED TO PERMIT THE USE OF A MANUFACTURER'S STANDARD METHODS OF FABRICATION.

END SECTIONS FABRICATED FROM THICKER METAL THAN INDICATED WILL BE ACCEPTED.

ALL BOLTS SHALL BE ¾" DIAMETER AND GALVANIZED, UNLESS OTHERWISE SHOWN.

TOE PLATES EXTENSIONS, IF SPECIFIED, SHALL HAVE HOLES TO MATCH HOLES IN TOE PLATE.

SKIRT SECTION IS DEFINED AS THE FLARED PORTION OF THE END SECTION INCLUDING SIDE AND BOTTOM (CENTER) PANELS AND APRON.

SKIRT SECTION FOR 12" THROUGH 24" PIPES SHALL BE MADE IN ONE PIECE.

SKIRT SECTIONS FOR 30" AND LARGER PIPES AND B5 AND LARGER PIPE ARCHES MAY BE MADE FROM UP TO 2 SHEETS JOINED BY RIVETING OR BOLTING ON CENTERLINE.

SKIRT SECTIONS FROM 48" AND LARGER PIPES AND B8 OR LARGER PIPE ARCHES MAY BE MADE FROM UP TO 3 SHEETS JOINED BY RIVETING OR BOLTING EQUAL DISTANCE FROM CENTERLINE.

SKIRT SECTIONS FOR 72" AND LARGER PIPES MAY BE MADE FROM UP TO 4 SHEETS JOINED BY RIVETING AND BOLTING. THE BOTTOM PANEL SHALL BE 2 EQUAL WIDTH SHEETS JOINED ON CENTERLINE.

ALL 3 PIECE AND 4 PIECE SKIRTS FOR 60" OR LARGER PIPES AND B10 AND LARGER PIPE ARCHES SHALL HAVE 0.109" THICK SIDES AND 0.138" THICK BOTTOM (CENTER) PANELS. WIDTH OF BOTTOM PANELS SHALL BE GREATER THAN 20% OF THE PIPE PERIPHERY CONNECTOR SECTIONS. CORNER PLATES AND TOE PLATES SHALL BE GALVANIZED AND OF THE SAME OR GREATER THICKNESS AS THE SKIRT.

MISSOURI HIGHWAYS AND TRANSPORTATION COMMISSION

FLARED END SECTION

METAL

DATE:_____ EFFECTIVE: 04-01-2003 732.00N 2/2