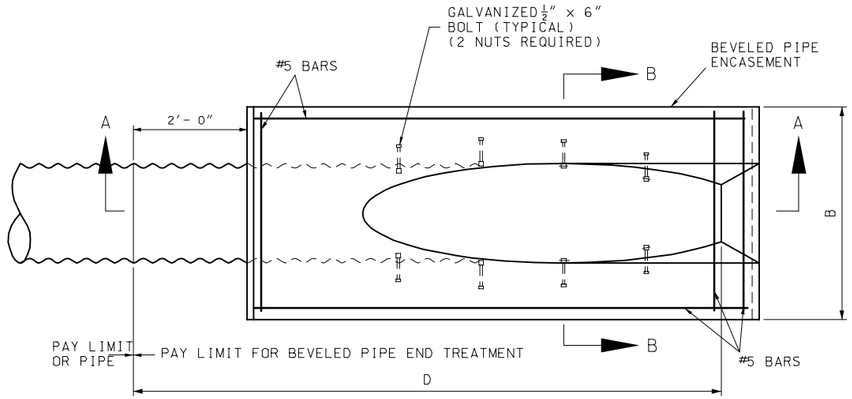

PLAN VIEW FOR HIGHWAYS

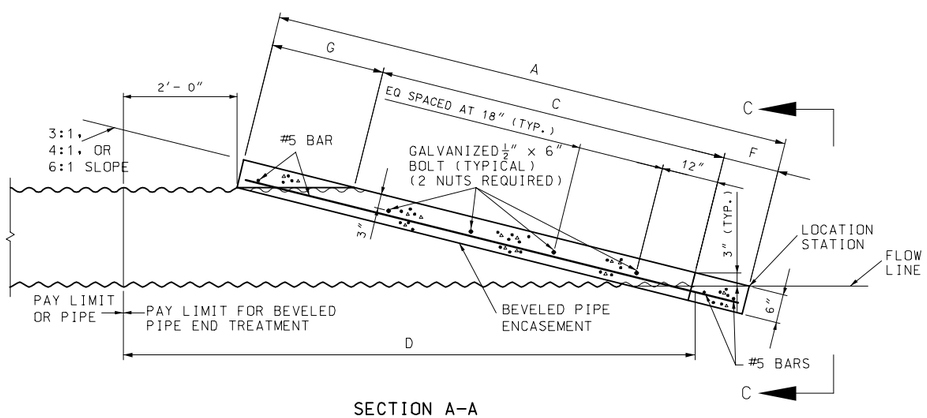

SECTION A-A

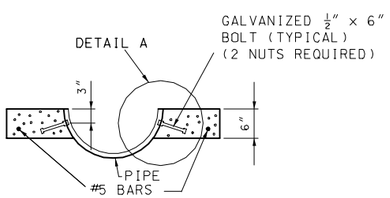

SECTION B-B

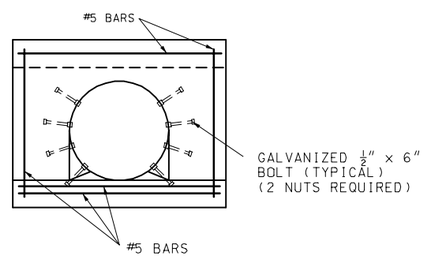

SECTION C-C

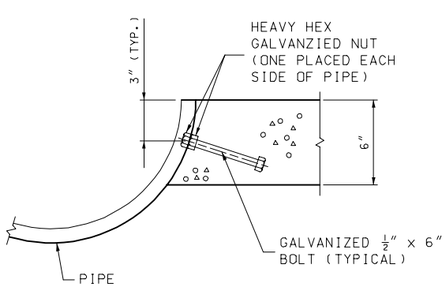

DETAIL A

BEVELED PIPE ENCASEMENT DETAILS								
PIPE DIAMETER	SLOPE	A	B	C	D	E	F	G
15"	3:1	5'-5½"	3'-3"	3'-2"	6'-7"	1	9½"	18"
	4:1	7'-2"		4'-1½"	8'-1¼"	2	12½"	24"
	6:1	10'-7¼"		6'-1"	11'-1½"	3	18¼"	36"
18"	3:1	6'-3"	3'-6"	3'-11½"	7'-4"	2	9½"	18"
	4:1	8'-2¼"		5'-1¾"	9'-1"	3	12½"	24"
	6:1	12'-1½"		7'-7¼"	12'-7½"	4	18¼"	36"
21"	3:1	7'-½"	3'-9"	4'-9"	8'-1"	3	9½"	18"
	4:1	9'-2¾"		6'-2¼"	10'-1¼"	3	12½"	24"
	6:1	13'-7¾"		9'-1½"	14'-1½"	5	18¼"	36"
24"	3:1	7'-10"	4'-0"	5'-6½"	8'-10"	3	9½"	18"
	4:1	10'-3"		7'-2½"	11'-1"	4	12½"	24"
	6:1	15'-2"		10'-7¾"	15'-7½"	6	18¼"	36"
27"	3:1	8'-7½"	4'-3"	6'-4"	9'-7"	4	9½"	18"
	4:1	11'-3½"		8'-3"	12'-1¼"	5	12½"	24"
	6:1	16'-8¼"		12'-2"	17'-1½"	7	18¼"	36"
30"	3:1	9'-5"	4'-6"	7'-1½"	10'-4"	4	9½"	18"
	4:1	12'-3¾"		9'-3¼"	13'-1"	6	12½"	24"
	6:1	18'-2½"		13'-8¼"	18'-7½"	8	18¼"	36"
33"	3:1	10'-2¼"	4'-9"	7'-10¾"	11'-¾"	5	9½"	18"
	4:1	13'-4¼"		10'-3¾"	14'-1¼"	6	12½"	24"
	6:1	19'-8¾"		15'-2½"	20'-1½"	9	18¼"	36"
36"	3:1	10'-11¾"	5'-0"	8'-8¼"	11'-10"	5	9½"	18"
	4:1	14'-4½"		11'-4"	15'-1"	7	12½"	24"
	6:1	21'-3"		16'-8¾"	21'-7½"	10	18¼"	36"
42"	3:1	12'-6¾"	5'-6"	10'-3¼"	13'-4"	6	9½"	18"
	4:1	16'-5¼"		13'-4¾"	17'-1¼"	8	12½"	24"
	6:1	24'-3½"		19'-9¼"	24'-7½"	13	18¼"	36"
48"	3:1	14'-1¾"	6'-0"	11'-10¼"	14'-10"	7	9½"	18"
	4:1	18'-6"		15'-5½"	19'-1¼"	10	12½"	24"
	6:1	27'-4"		22'-9¾"	27'-7½"	15	18¼"	36"
54"	3:1	15'-8¾"	6'-6"	13'-5¼"	16'-4"	8	9½"	18"
	4:1	20'-6¾"		17'-6¼"	21'-1¼"	11	12½"	24"
	6:1	30'-4½"		25'-10¼"	30'-7½"	17	18¼"	36"
60"	3:1	17'-3¾"	7'-0"	15'-¼"	17'-10"	9	9½"	18"
	4:1	22'-7½"		19'-7"	23'-1¼"	12	12½"	24"
	6:1	33'-5"		28'-10¾"	33'-7½"	19	18¼"	36"

GENERAL NOTES:

CONCRETE USED IN CONSTRUCTION OF THE BEVELED PIPE ENCASEMENT SHALL BE CLASS B CONCRETE OR AN APPROVED COMMERCIAL MIX MEETING REQUIREMENTS OF SECTION 501 OF THE STANDARD SPECIFICATIONS.

REINFORCING STEEL USED IN CONSTRUCTION OF THE BEVELED PIPE ENCASEMENT SHALL MEET THE REQUIREMENTS OF SECTION 1036 OS THE STANDARD SPECIFICATIONS.

BEVELED PIPE ENCASEMENT MAY BE USED WITH EITHER POLYETHYLENE OR CORRUGATED METALLIC COATED STEEL PIPE.

THE PRICE BID PER EACH FOR "BEVELED PIPE END TREATMENT" SHALL BE CONSIDERED FULL COMPENSATION FOR FURNISHING ALL MATERIALS AND INSTALLATION OF THE BEVELED PIPE SECTION AND BEVELED PIPE ENCASEMENT AS SHOWN OR AS DIRECTED BY THE ENGINEER.

THE ½" × 6" BOLT AND NUTS SHALL BE GALVANIZED IN ACCORDANCE WITH AASHTO M232 (ASTM A153) SPECIFICATIONS. LOW CARBON STEEL ANCHOR BOLTS SHALL MEET ASTM A307.

BEVELED PIPE SHALL BE DRILLED AT LOCATIONS SHOWN ON PLANS FOR PLACEMENT OF ½" × 6" GALVANIZED BOLTS. THE ½" × 6" GALVANIZED BOLTS SHALL BE "DOUBLE NUTTED" AS SHOWN AND PLACED IN THE VALLEY OF PIPE CORRUGATIONS.

MISSOURI HIGHWAYS AND TRANSPORTATION COMMISSION

BEVELED PIPE END TREATMENT FOR HIGHWAYS

DATE:_____ | EFFECTIVE: 04-01-2001 | 732.05C | 1/2

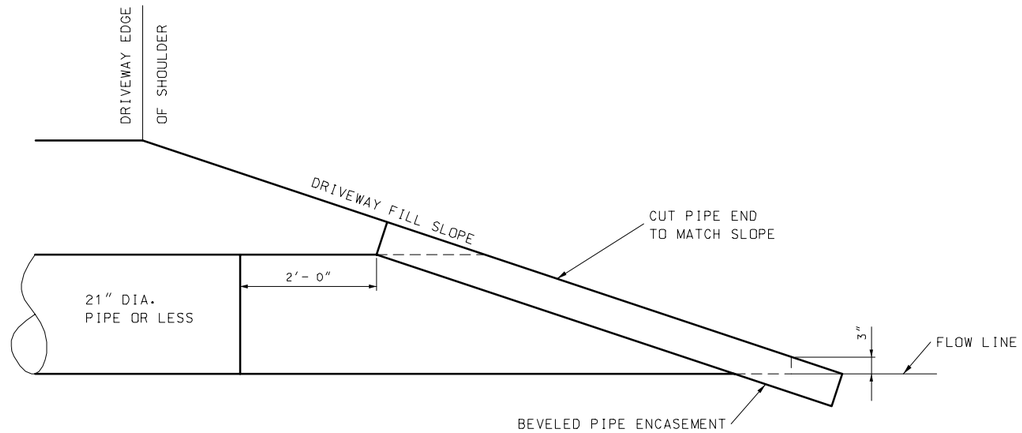

PIPE END DETAILS FOR PARALLEL DRAINAGE STRUCTURES FOR DRIVEWAYS

(SINGLE PIPE INSTALLATION)

NOTE:

FOR MULTIPLE PIPE INSTALLATIONS, END SECTIONS WITH SAFETY BARS SYSTEM OR OPTIONAL BAR GATE SYSTEM SHALL BE PROVIDED. SEE STANDARD PLAN 732.10.

SEE DRIVEWAY STANDARD PLANS FOR BEVELED END SECTION REQUIREMENTS.

GENERAL NOTES:

CONCRETE USED IN CONSTRUCTION OF THE BEVELED PIPE ENCASEMENT SHALL BE CLASS B CONCRETE OR AN APPROVED COMMERCIAL MIX MEETING REQUIREMENTS OF SECTION 501 OF THE STANDARD SPECIFICATIONS.

REINFORCING STEEL USED IN CONSTRUCTION OF THE BEVELED PIPE ENCASEMENT SHALL MEET THE REQUIREMENTS OF SECTION 1036 OS THE STANDARD SPECIFICATIONS.

BEVELED PIPE ENCASEMENT MAY BE USED WITH EITHER POLYETHYLENE OR CORRUGATED METALLIC COATED STEEL PIPE.

THE PRICE BID PER EACH FOR "BEVELED PIPE END TREATMENT" SHALL BE CONSIDERED FULL COMPENSATION FOR FURNISHING ALL MATERIALS AND INSTALLATION OF THE BEVELED PIPE SECTION AND BEVELED PIPE ENCASEMENT AS SHOWN OR AS DIRECTED BY THE ENGINEER.

THE $\frac{1}{2}$″ x 6″ BOLT AND NUTS SHALL BE GALVANIZED IN ACCORDANCE WITH AASHTO M232 (ASTM A123) SPECIFICATIONS. LOW CARBON STEEL ANCHOR BOLTS SHALL MET ASTM A307.

BEVELED PIPE SHALL BE DRILLED AT LOCATIONS SHOWN ON PLANS FOR PLACEMENT OF $\frac{1}{2}$″ x 6″ GALVANIZED BOLTS. THE $\frac{1}{2}$″ x 6″ GALVANIZED BOLTS SHALL BE "DOUBLE NUTTED" AS SHOWN AND PLACED IN THE VALLEY OF PIPE CORRUGATIONS.

MISSOURI HIGHWAYS AND TRANSPORTATION COMMISSION			
	BEVELED PIPE END TREATMENT FOR DRIVEWAYS		
DATE:_____	EFFECTIVE: 04-01-2001	**732.05C**	2/2