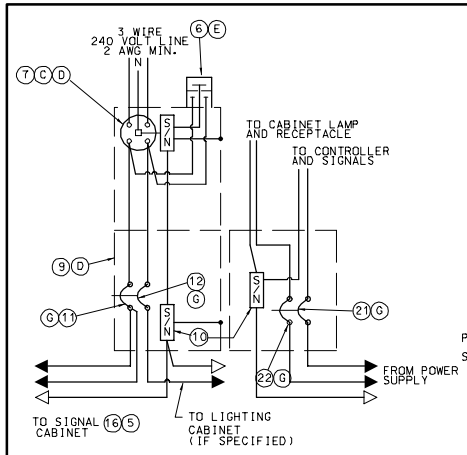

WIRING DIAGRAM SIGNALS AND/OR LIGHTING

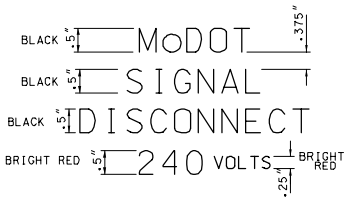

LABEL DETAIL (20)

PEDESTAL OR NEW STATE-OWNED POLE TO BE SET WITHIN 2' TO 4' OF RIGHT-OF-WAY LINE.

ALL SERVICE POWER SUPPLY ASSEMBLIES ARE TO BE LOCATED ON STATE PROPERTY.

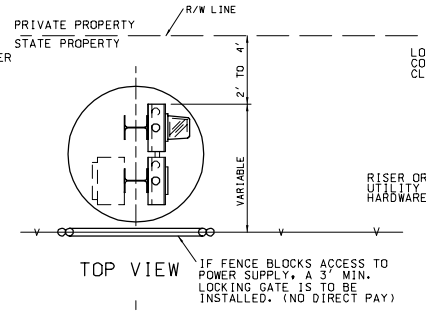

TOP VIEW

LOCATION OF FACILITIES SHALL COMPLY WITH UTILITY COMPANY CLEARANCE STANDARDS.

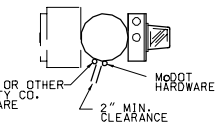

SECTION A-A

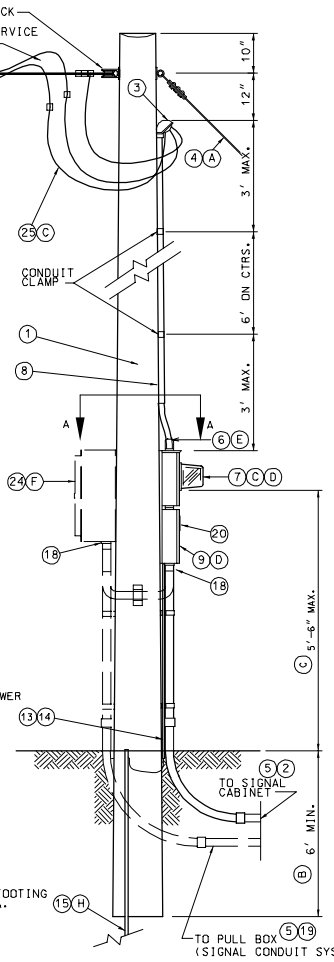

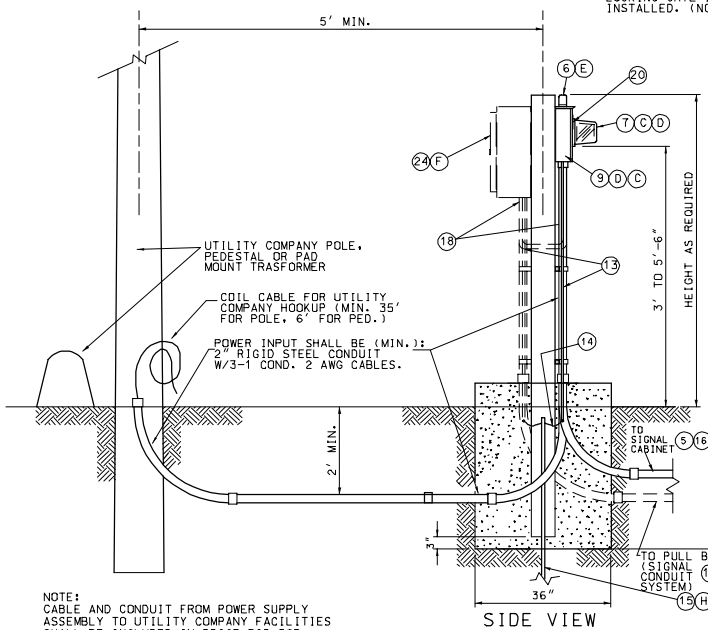

SIDE VIEW

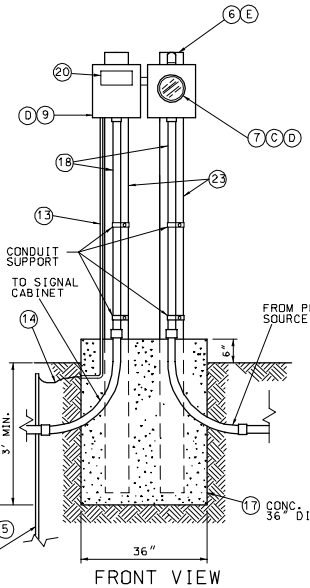

FRONT VIEW

NOTE:
CABLE AND CONDUIT FROM POWER SUPPLY ASSEMBLY TO UTILITY COMPANY FACILITIES SHALL BE INCLUDED IN PRICE BID FOR POWER SUPPLY ASSEMBLY.

TYPE 2 (PEDESTAL) UNDERGROUND SERVICE

TYPE 1 (POLE) OVERHEAD SERVICE

LIST OF MATERIALS

ITEM	DESCRIPTION
1	SERVICE POLE 30' MIN.,CLASS IV WOOD, CONTRACTOR PROVIDED, MoDOT OWNED ✳
2	#8 AWG MIN. CABLE, 600 VOLT ✳
3	SERVICE ENTRANCE HEAD
4	GUY CABLE, AS REQUIRED
5	2" MIN. RIGID CONDUIT WITH PREFORMED ELBOWS
6	LIGHTNING ARRESTOR, VALVE TYPE, 2 POLE, 650 VOLT
7	METER SOCKET, 200 AMP, FOR SIGNALS
8	2" MIN. RIGID CONDUIT
9	SERVICE DISCONNECT BOX, LOCKING, RAINTIGHT, NEMA 4
10	INSULATED, GROUNDABLE NEUTRAL, 200 AMP MINIMUM
11	SIGNAL BREAKER, SINGLE POLE, 40A MIN, TYPE A OR B ✳
12	LIGHTING BREAKER, SINGLE POLE, 40A, TYPE A OR B
13	METAL CONDUIT, ⌀1 2"
14	GROUND WIRE, #2 AWG MIN.
15	GROUND ROD, ⌀ 4" x 8' MIN.
16	#8 AWG MIN. CABLE, 600 VOLT
17	CLASS B CONCRETE, 0.92 C.Y. ±
18	THREADED CONDUIT HUB WITH SEALING WASHERS
19	LIGHTING CABLES ✳
20	WEATHERPROOF ADHESIVE LABEL (SIGNALS) VINYL RAISED LETTERING
21	TYPE B CONTROLLER AND SIGNAL BREAKER, AS SPECIFIED.
22	TYPE B AUXILIARY BREAKER, 15 AMP
23	W6 x 9 OR W6 x 15 GALVANIZED POST
24	LIGHTING CONTROL CABINET (SEE SHEET 2)
25	#2 AWG MIN. CABLE, 600 VOLT
✳	SEE PLANS

NOTES

(A) SERVICE POLE SHALL BE GUYED WHEN SPAN OF OVERHEAD SERVICE WIRE EXCEEDS 50'.

(B) INCREASE 1 FOOT FOR EACH 5 FEETABOVE 50 FEET.

(C) SERVICE DICONNECT BOXES AND METTER BOXES SHALL BE ALUMINUM OR STAINLESS STEEL, ALL HARDWAR, HINGES, CATCHES, ETC. SHALL BE STAINLESS STEEL. METER SOCKET AND OTHER EQUIPMENT AND MATERIALS SHALL BE U.L. APPROVED, AND CONFORM TO THE REQUIREMENTS OF THE UTILITY COMPANY OR MUNICIPALITY PROVIDING POWER.

(D) SCHEMATIC DIAGAM SHALL BE MOUNTED ON INSIDED OF DOOR.

(E) UTILITY COMPANY SHALL DECIDE IF LIGHTNING ARRESTERS ARE TO BE CONNECTED ON THE LOAD OR LAINE SIDE OF THE METER. THE UTILITY COMPANY SHALL ALSO DECIDE IF THE LIGHTNING ARRESTER IS TERMINATED IN THE METER OR DISCONNECT CABINET, IF TERMINATED IN THE DISCONNECT CABINET, IT SHALL BE INSTALLED ON THE CONNECT CABINET.

(F) IF LIGHTING IS SPECIFIED, INSTALL LIGHTING CONTROL ON POWER SUPPLY.

(G) BREAKERS SHALL CONFORM TO SEC. 901.4 OF THE STANDARD SPECIFICATIONS.

(H) IF SUBSURFACE CONDITIONS EXIST WHICH PROHIBIT THE PLACEMENT OF THE GROUND ROD IN VERTICAL POSITION, THE ROD MAY BE DIRIVEN AT AN OBLIQUE ANGLE NOT TO EXCEED 45 DEGREES FROM VERTICAL OR BURIED IN A TRENCH AT LEAST 30 IN. DEEP. CONNECTION TO GROUND ROD SHALL BE CADWELDED.

GENERAL NOTES:

FOR CABLE TYPES AND INSTALLATION, SEE STANDARD SPECIFICATIONS.

THE TYPE POWER SUPPLY ASSEMBLY IS SHWN ON THE PLANS OR IS DESIGNATED IN THE CONTRACT.

THE UTILITY COMPANY SHALL BE NOTIFIED IN WRITING 30 DAYS PRIOR TO DATE SERVIC WILL BE REQUIRED.

WHERE SIGNAL OR LIGHTING POWER ONLY IS DESIGNATED, OMIT ITEMS NOT REQUIRED.

ALL OPENINGS IN ANY SERVICE BOX OR METER BOX SHALL BE COVERED AND SEALED WITH LIFETIME SILICONE CAULK.

ALL METERIALS REQUIRED EXCLUDING REFERENCE ITEMS AS SHOWN ON DRAWING SHALL BE INCLUDED IN PRICE BID FOR POWERE SUPPLY ASSEMBLY.

MISSOURI HIGHWAYS AND TRANSPORTATION COMMISSION

TRAFFIC SIGNALS

POWER SUPPLY ASSEMBLY
240/120 VOLT SERVICE

DATE:_____ | EFFECTIVE: 07-01-2004 | 902.15K | 1/2