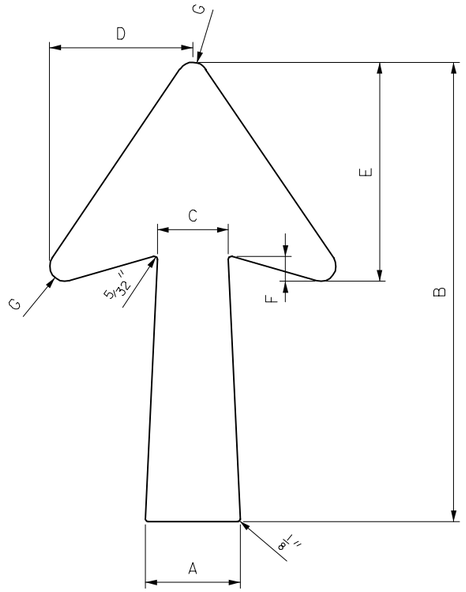

TYPE A

TYPE A ARROW TABLE							
LETTER SIZE	A	B	C	D	E	F	G
8″ U.C.	5″	25″	$3\frac{3}{4}$″	$7\frac{9}{16}$″	$11\frac{9}{16}$″	$1\frac{5}{16}$″	$\frac{13}{16}$″
10.67″ & 13.33″ U.C.	6″	30″	$4\frac{1}{2}$″	$9\frac{1}{8}$″	14″	$1\frac{1}{2}$″	$\frac{3}{4}$″
16″ U.C.	$7\frac{1}{8}$″	35″	$5\frac{3}{8}$″	$11\frac{1}{8}$″	17″	$1\frac{3}{4}$″	1″

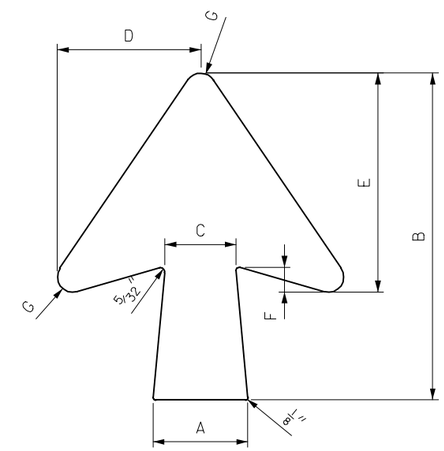

TYPE B

TYPE B ARROW TABLE							
LETTER SIZE	A	B	C	D	E	F	G
8″ - 10.67″ U.C.	5″	17″	$3\frac{3}{4}$″	$7\frac{9}{16}$″	$11\frac{9}{16}$″	$1\frac{5}{16}$″	$\frac{13}{16}$″
13.33″ U.C.	6″	20″	$4\frac{1}{2}$″	$9\frac{1}{8}$″	14″	$1\frac{1}{2}$″	$\frac{3}{4}$″
16″ U.C.	$7\frac{1}{8}$″	25″	$5\frac{3}{8}$″	$11\frac{1}{8}$″	17″	$1\frac{3}{4}$″	1″

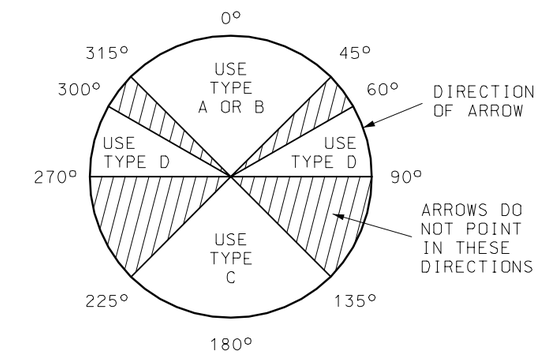

EXAMPLE: 30° – USE TYPE A OR B
90° – USE TYPE D

DIRECTION OF ARROW HELPS DETERMINE WHICH ARROW TO USE

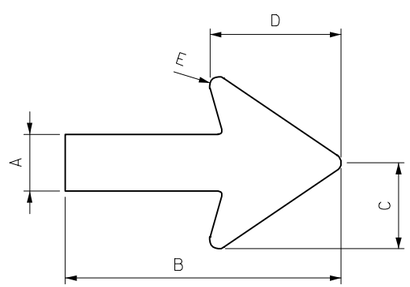

TYPE D

TYPE D ARROW TABLE					
LETTER SIZE	A	B	C	D	E
6″ U.C.✱✱	$2\frac{1}{4}$″	9″ MIN.	3″	$4\frac{1}{2}$″	$\frac{7}{16}$″
8″ U.C.	$2\frac{3}{4}$″	$12\frac{1}{4}$″	$3\frac{9}{16}$″	$6\frac{1}{8}$″	$\frac{9}{16}$″
10.67″ U.C.	$3\frac{1}{4}$″	$14\frac{1}{2}$″	$4\frac{3}{8}$″	$7\frac{1}{4}$″	$\frac{5}{8}$″
13.33″ U.C.	$3\frac{3}{4}$″	$16\frac{3}{4}$″	$5\frac{1}{16}$″	$8\frac{3}{8}$″	$\frac{3}{4}$″
16″ U.C.	$4\frac{1}{2}$″	20″	$6\frac{1}{16}$″	10″	$\frac{7}{8}$″
20″ U.C.	$5\frac{1}{2}$″	$24\frac{1}{2}$″	$7\frac{1}{2}$″	$11\frac{1}{8}$″	$1\frac{1}{8}$″

✱ FOR HORIZONTAL PLACEMENT UNDER LEGEND, DIMENSION "B" WILL BE EXTENDED, AT 1 FOOT INCREMENTS, TO APPROXIMATELY 50% OF THE MAXIMUM LEGEND WIDTH.

✱✱ FOR USE ON SIGNS WITH TYPE L-1 OR L-3 LEGENDS.

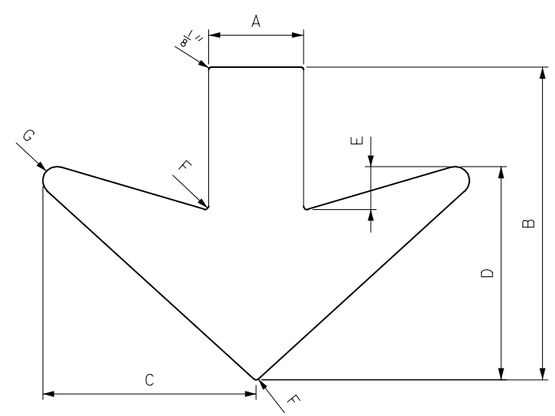

TYPE C

TYPE C OVERHEAD ARROW DIMENSIONS						
A	B	C	D	E	F	G
$6\frac{1}{2}$″	22″	16″	16″	3″	$\frac{3}{16}$″	1″

GENERAL NOTES:

TYPE A SHOULD BE USED FOR SIGNS WITH TWO OR MORE LINES OF MESSAGE. TYPE B MAY BE USED ALONGSIDE A SINGLE LINE OF SIGN MESSAGE OR WHEN SIGN SIZE IS RESTRICTED BY LOCATION.

MISSOURI HIGHWAYS AND TRANSPORTATION COMMISSION

SPECIAL SIGNING CHARACTERS

DATE:_____ EFFECTIVE: 07-01-2003 903.01H 1/1