Missouri Department of Transportation

Bridge Division

Bridge Design Manual

Section 3.55

Revised 08/08/2003

Click Here for Index

Index

3.55.1 Design

1.1 Girder Design (18 sheets)

1.2 Beam Type 2, Section Properties and Strand Arrangement (Continuous Spans) (5 sheets)

1.3 Beam Type 3, Section Properties and Strand Arrangement (Continuous Spans) (8 sheets)

1.4 Beam Type 4, Section Properties and Strand Arrangement (Continuous Spans) (10 sheets)

1.5 Beam Type 2, Section Properties and Strand Arrangement (Simple Span) (3 sheets)

1.6 Beam Type 3, Section Properties and Strand Arrangement (Simple Span) (5 sheets)

1.7 Beam Type 4, Section Properties and Strand Arrangement (Simple Span) (7 sheets)

1.8 Beam Type 6 and Beam Type 7 (Bulb Tee Girder), Section Properties and Strand Arrangement (Continuous Spans) (7 sheets)

1.9 Section Properties (Moment of Inertia Charts) (16 sheets)

1.10 Materials

1.11 Allowable Concrete Stresses

1.12 Prestress Loss and Prestress Camber (5 sheets)

1.13 Superstructure Design

1.14 Web Reinforcement (2 sheets)

1.15 Blank

1.16 Strands - Miscellaneous

1.17 Dimensional Tolerances

3.55.2 Length

2.1 Structure Length

3.55.3 Details

3.1 Haunching, Girder Steps, Beam Lengths and Geometric Layout (6 sheets)

3.2 Open Intermediate Diaphragms (Continuous Superstructure) (3 sheets)

3.3 Closed Intermediate Diaphragms (Continuous Superstructure) (9 sheets)

3.4 Intermediate Diaphragms (3 sheets)

3.5 Coil Ties (2 sheets)

3.6 End Diaphragms (Non-Integral End Bents with No Expansion Device) (3 sheets)

3.7 End Diaphragms (Non-Integral End Bents with Expansion Device) (3 sheets)

3.8 End Diaphragms (Non-Integral Intermediate Bents with Expansion Device) (3 sheets)

3.9 Diaphragm Reinforcement (Finger Plate Expansion Devices)

Index

3.55.4 Miscellaneous Details

4.1 Shear Blocks (2 sheets)
4.2 Bent Steps
4.3 Anchor Bolts
4.4 Dowel Bars
4.5 Vent Holes
4.6 Expansion Device Support Slots

3.55.5 Precast Prestressed Concrete Box Girders

5.1 Tie Rod Details and Locations (2 sheets)

GIRDER DESIGN
DESIGN PROCEDURE:

1. The prestressed I-girder should first be designed assuming that the contractor will vary the joint filler supporting the panels on the girder flange. This assumption will maintain the minimum slab/panel combination thickness of 8.5″ and will eliminate the possibility of increased load due to varying slab thickness.

2. With the girder designed and the camber and haunching dimensions calculated, the girder should be checked assuming the contractor will use a constant 3/4″ joint filler. This will cause the slab thickness to vary due to the camber of the girder, increasing the load. This additional load shall be placed as a concentrated load at the 1/8 point from each end of the girder from centerline of bearing.

   An example of how this concentrated load could be calculated follows:

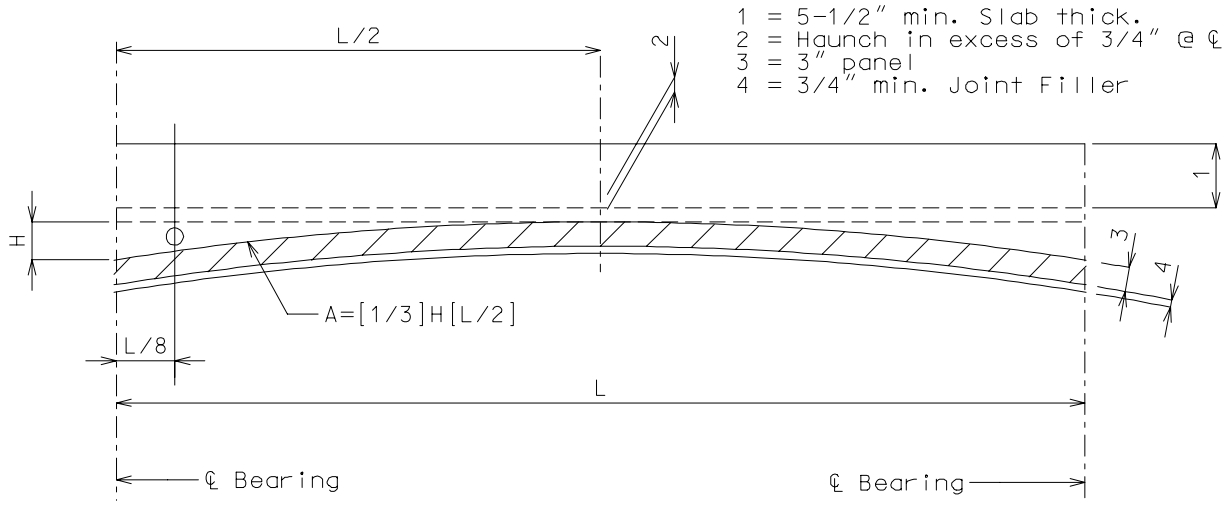

W load = (A)(0.15 kips/cubic ft.) determine the concentrated load ✳ to girders by distributing the W load transversely across the girders. (Use the Girder Reactions Program.)

✳ This load shall be positioned at the 1/8 point from centerline Bearing.

If the minimum haunch is greater than the 3/4″ Joint Filler, the additional haunch shall be included in the slab thickness as a uniform load.

If the use of these loads causes the girder design to change, it shall be the responsibility of the designer to determine if the camber and haunching should be recalculated.

The bearing design calculations should use a combination of the heaviest loads and the lightest loads to ensure both the minimum and maximum dead load requirements are met.

Design

GIRDER DESIGN (CONT.)
GEOMETRIC DEMENSIONS:

The ratio of the depth of girder to span length will in general be not less than 1/18. (For estimation purposes only, see Table on page 1.1-8)

The cross sectional dimensions of the girder will be one of the following:

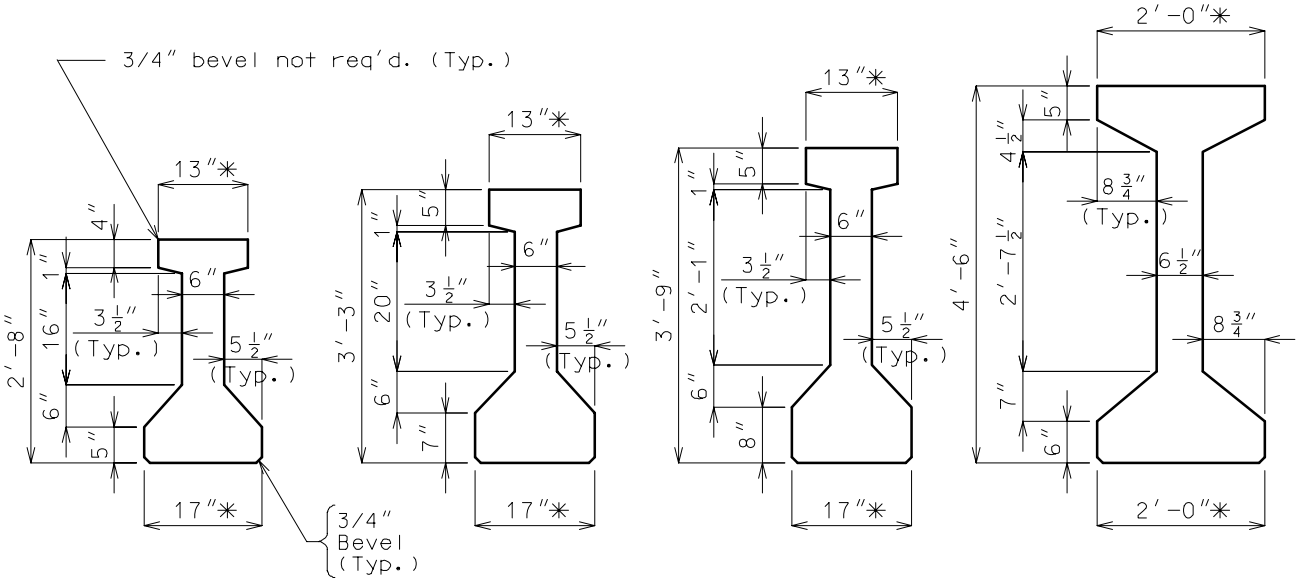

BEAM TYPE 2 BEAM TYPE 3 BEAM TYPE 4 BEAM TYPE 6

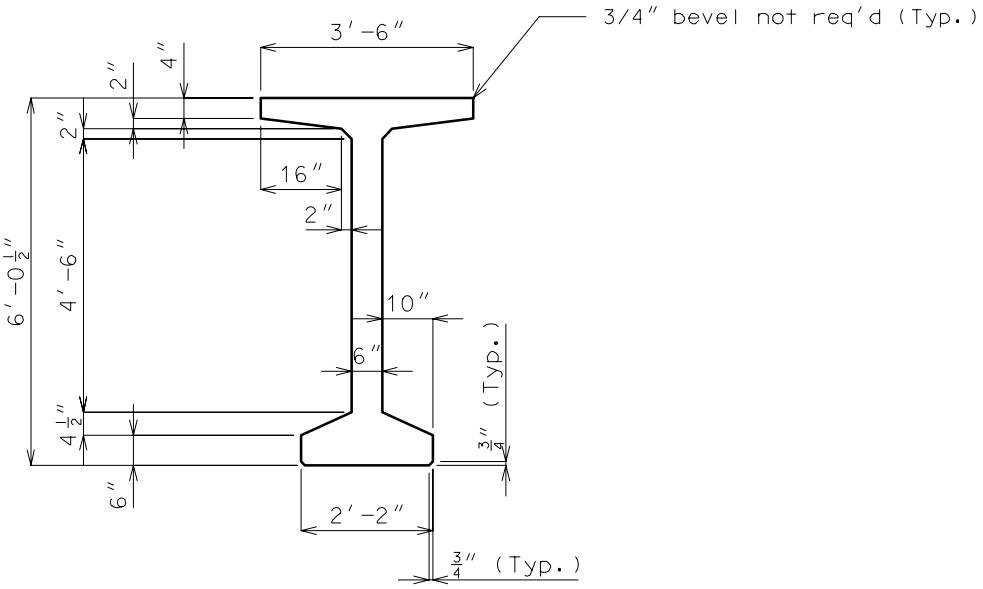

BEAM TYPE 7

✳ If the web is required to be increased, then the top and bottom flanges are to be increased by the same amount. (1" increments 2" max.). (See Development Section for A and I values.)

GIRDER DESIGN (CONT.) **Design**
GEOMETRIC DIMENSIONS (CONT.):

Girder Analysis (Continuous Span Series)

Stresses due to dead load weight of slab, girder, diaphragms, haunch and forms will be based on simple spans from ℄ to ℄ of bearings. See Section 3.30 for weights to girders.

Stresses due to dead load weight of curbs, parapet, rails, future wearing surface and outlets will be based on continuous composite spans with loads equally distributed to all girders. The span lengths used in these computations will be based on the distance from the ℄ of the bearing at the End Bent to the ℄ of the Int. Bent, and from ℄ of Int. Bent to ℄ of Int. Bent.

Stresses due to live load plus impact will be based on continuous composite spans whose lengths are described above for curbs, etc.

The analysis will be made on the basis of transformed areas of all steel (both strands and bars) in the section using concrete with n=6.

In composite design, allowances shall be made for the difference in modulus of elasticity of slab and girder by using the effective slab area as specified for concrete T-Beams as given in the current AASHTO Specifications, multiplied by the factor (E_{slab}/E_{girder}). The area shall include the transformed area of all longitudinal reinforcing bars within the effective width. The 1″ integral wearing surface shall not be used in the effective slab depth.

Effective Flange Width

The effective flange width for Beam Types 2,3,4 & 6 should be calculated using AASHTO 8.10.1. For Beam Type 7, the effective flange width should be calculated using AASHTO 9.8.3.

GIRDER DESIGN (CONT.) **Design**

CONTINUITY AT INTERMEDIATE SUPPORTS:

Continuity will be obtained at intermediate supports by pouring a concrete diaphragm monolithic with the deck slab and encasing the prestressed girders. Reinforcing bars will tie the slab, diaphragms and girders together.

Reinforcing bars, fy = 60,000 psi, will be placed in the deck slab for tensile steel.

The ultimate negative moments should be 2.17 times the maximum live load moments including impact and 1.3 times moments for future wearing surface and dead load of curb, parapet or safety barrier curb and bridge rail.

The area of longitudinal reinforcing steel at the centerline of the intermediate bent should be determined on the basis of a cracked section. This area of reinforcing bars is to be provided by adding additional bars between the normal longitudinal bars at the top of the slab. #8 maximum bar size for additional bars over bents.

These special negative moment reinforcing bars should be ended by one of the following criteria (whichever is greater):

(1) Where the stress on the normal longitudinal reinforcing bars does not exceed 24,000 psi. as based on a cracked section, plus 15 bar diameters or development length. (See page 1.1-9 this section for example)

(2) Not closer to the centerline of the intermediate bent than 1/10 of the span. (8′ min.)

The concrete stress at the bottom of the girder should be checked at a point 70 strand diameters plus 9 inches from the centerline of the intermediate bent to see that the total compressive stress due to prestress and negative moment does not exceed 3,000 psi. (AASHTO. 9.7.2)

The positive moment at the intermediate bent should be provided for by extending the top two rows of the top strands (both straight or deflected) and if available, the number of bottom strands indicated in Tables 3.55 1.1-1 & 3.55 1.1-2 (on page 1.1-6B) bent to form a right angle hook.

GIRDER DESIGN (CONT.) **Design**
CONTINUITY AT INTERMEDIATE SUPPORTS: (CONT.)

Design of Negative Moment Reinforcement:
Since most of the dead load moments are carried by the beam acting as a simple span, the negative design moment over piers is the live load plus impact moment. In most designs, the dead load applied after continuity is achieved should also be considered in the negative design moment. The effect of initial precompression due to prestress in the precast girders may be neglected in the negative moment computation of ultimate strength if the maximum precompression stress is less than 0.4f'c and the continuity reinforcement is less than 1.5 percent.

It will usually be found that the depth of the compression block will be less than the thickness of the bottom flange of the precast girder. For this reason, the negative moment reinforcement required can be determined by assuming the beam to be a rectangular section with a width equal to the bottom flange width of the girder. Due to the lateral restraint of the diaphragm concrete, ultimate negative compression failure in the PCA tests always occurred in the girders, even though the diaphragm concrete strength was about 1000 psi less than that of the girder concrete for this reason, it is recommended that the negative moment reinforcement be designed using the compressive strength of the girder concrete.

Design Example (✳) (See chart on following page. The arrows on chart apply to this design example.)

Ultimate negative moment due to 2.17 x (LL+I) plus 1.3 x DL2 = 3740 ft.-kips

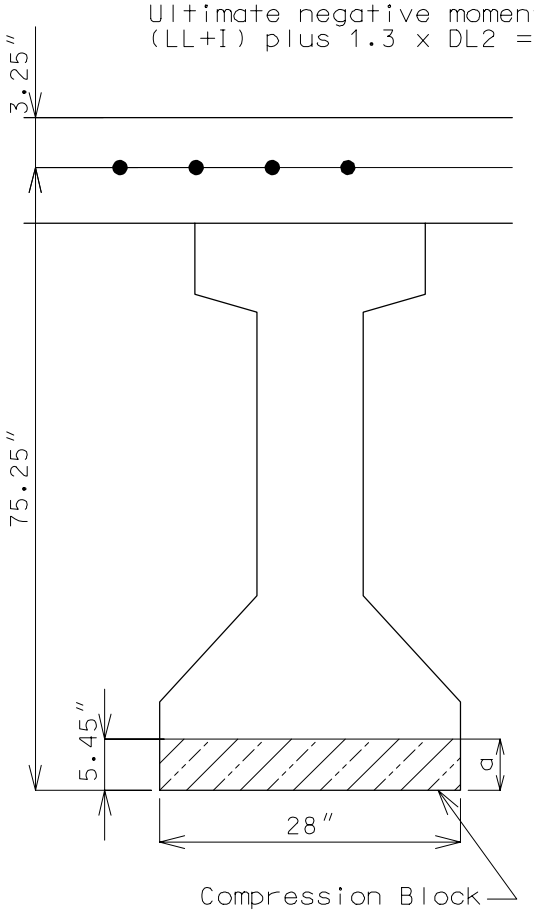

BR200 uses
d = girder height + EFF. slab - 3"

$$\frac{M_u}{\phi b d^2} = \frac{3{,}740{,}000 \times 12}{28 \times 75.25^2} = 283$$

$\phi = 1.0$

$\rho = 0.00475$, fy = 60,000 psi

$A_s = 0.00475 \times 28'' \times 75.25'' = 10.01$ sq. in.

Try 18 #7 Bars $A_s = 10.82$ sq. in.

$$a = \frac{A_s f_y}{0.85\ (f'c\ \text{girder})b}$$ AASHTO 8.16.3

Check ultimate moment provide:

$$a = \frac{10.82 \times 60{,}000}{0.85 \times 5000 \times 28} = 5.45''$$

a = depth of compression block

Note depth of compression block < bottom flange thickness.

$M_u = A_s F_y \left(d - \frac{a}{2}\right) = 10.82 \times 60{,}000\ (75.25 - 2.725)$

M_u = 47,083,230" LB = 3,924 ft.-kips.

OK. M_u provided > required 3740 ft.-kips.

✳ See Computer Manual page BR200-3 for additional check.

GIRDER DESIGN (CONT.)

Design

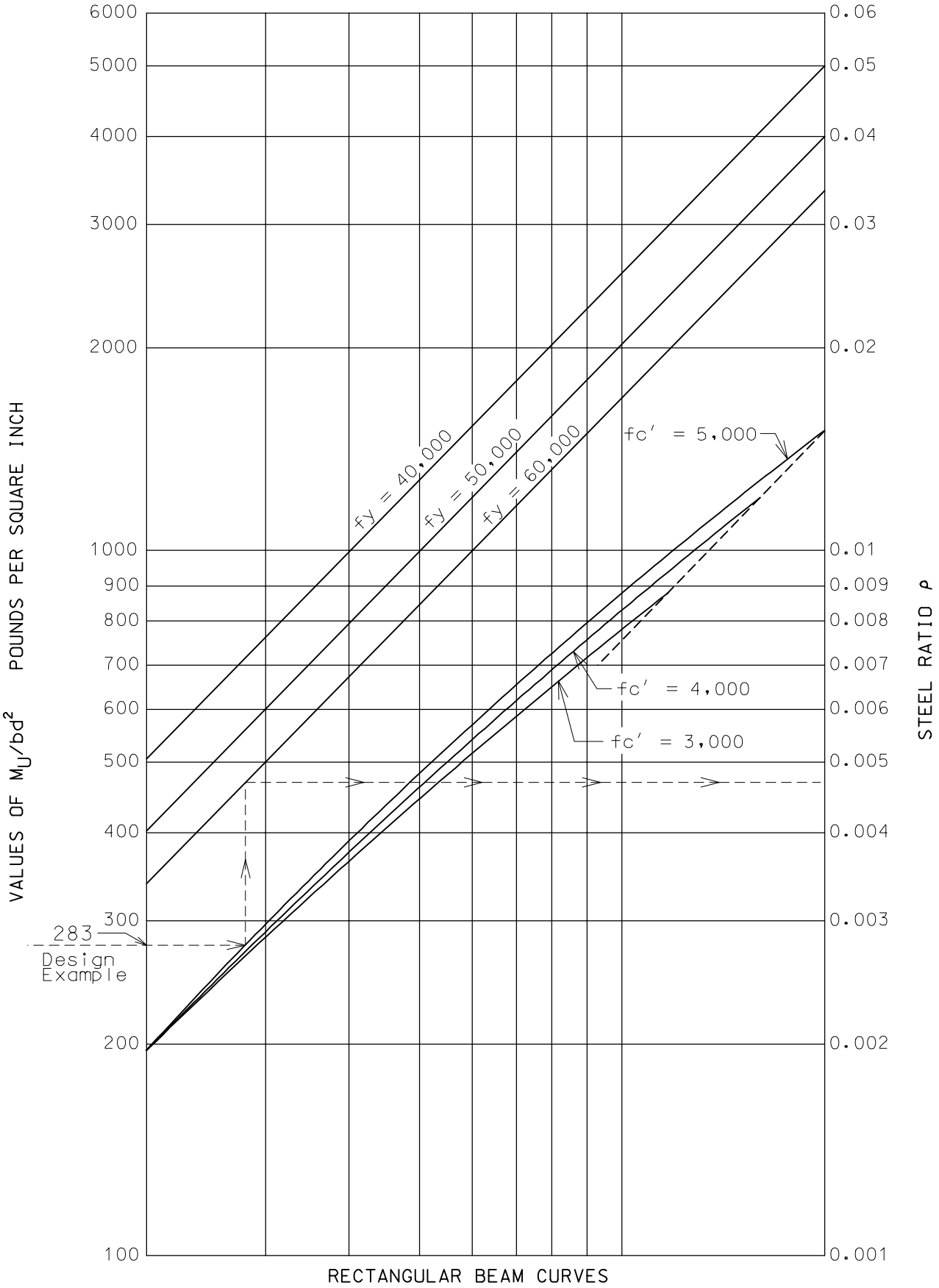

RECTANGULAR BEAM CURVES

Design

GIRDER DESIGN (CONT.)
SECTION PROPERTIES - STAND ARRANGEMENT & PROJECTION

The properties and strand arrangement of the most commonly used girders are shown on the following pages.

Other strand arrangements are permissible. If a web thickness greater than that shown on page 1.1-1B is required by design, consult Structural Project Manager.

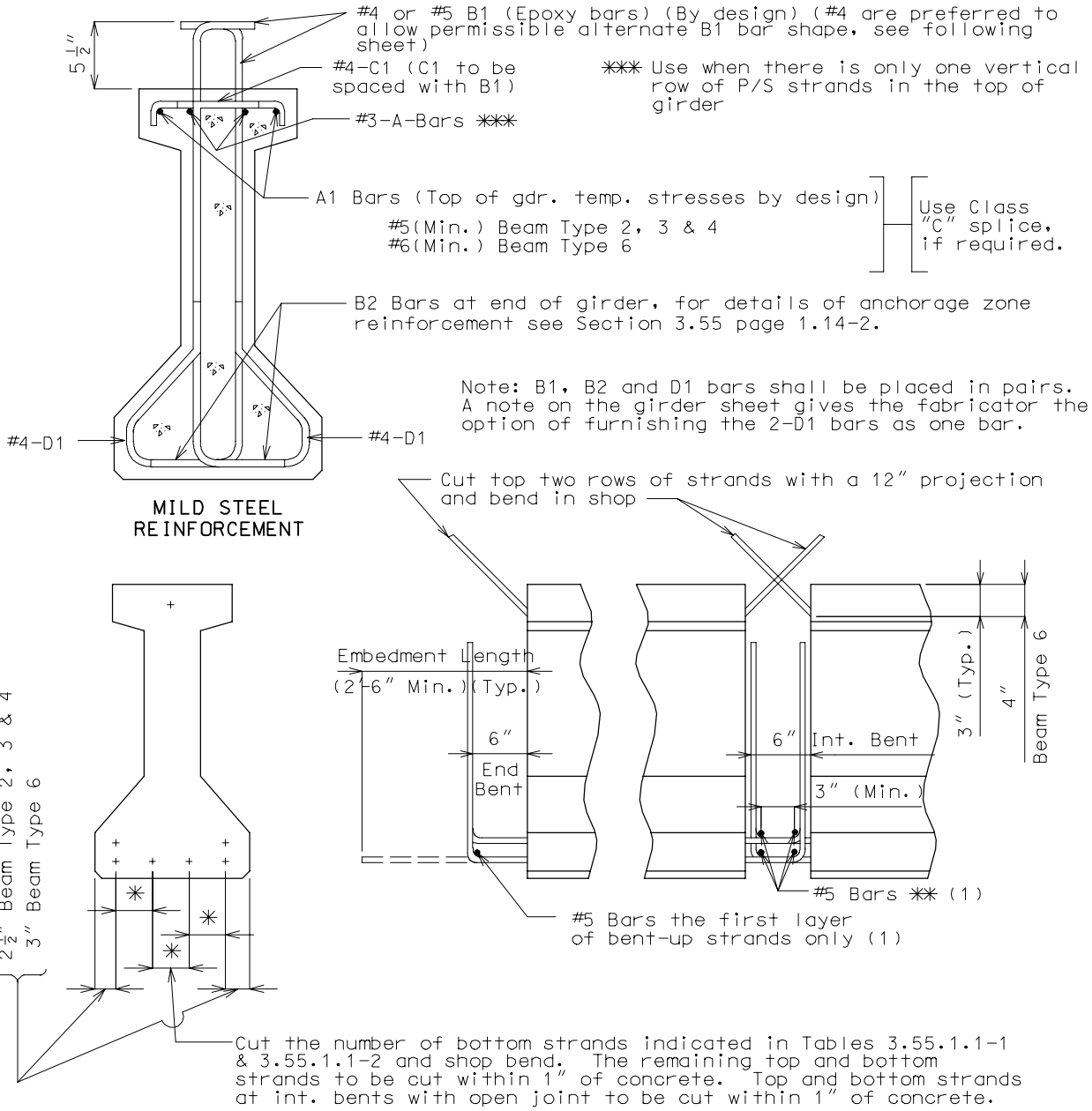

✱ Varies

✱✱ #5 bars typical at each layer of bent-up strands.

(1) #5-strand tie bars normal of girder.

Notations used on the following pages are shown below:

A = Cross-sectional area of girder.

Y_S = Distance from centroid to bottom of girder.

I = Moment of inertia of girder.

GIRDER DESIGN (CONT.)
PREMISSIBLE ALTERNATE B1 BARS SHAPE

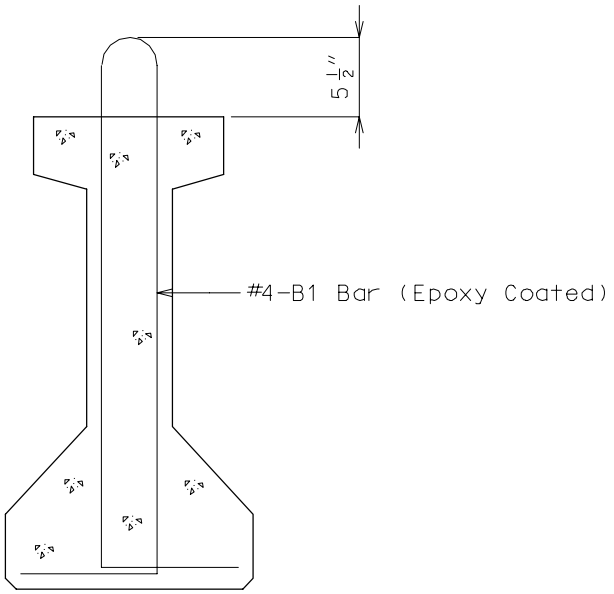

B1 BAR
PERMISSIBLE
ALTERNATE
SHAPE

Note: Place the above detail on Prestress I-Girder sheets only where #4-B1 reinforcing bars are used.

TABLE NO. 3.55.1.1-1

WEB THICKNESS (INCHES)	NUMBER OF BOTTOM STRANDS FOR POSITIVE MOMENT CONNECTION (C) FOR CLOSED DIAPHRAGMS				
	BEAM TYPE 2 OR MODIFIED	BEAM TYPE 3 OR MODIFIED	BEAM TYPE 4 OR MODIFIED	BEAM TYPE 6 OR MODIFIED	BEAM TYPE 7 (BULB TEE)
6	6	8	10	---	18
6-1/2	---	---	---	14	---
7(A)	8	10	10	---	---
7-1/2(B)	---	---	---	16	---
8(A)	8	10	12	---	---
8-1/2(B)	---	---	---	16	---

TABLE NO. 3.55.1.1-2

WEB THICKNESS (INCHES)	NUMBER OF BOTTOM STRANDS FOR POSITIVE MOMENT CONNECTION (C) FOR OPEN INTERMEDIATE DIAPHRAGMS WITH CONTINUOUS SUPERSTRUCTURE				
	BEAM TYPE 2 OR MODIFIED	BEAM TYPE 3 OR MODIFIED	BEAM TYPE 4 OR MODIFIED	BEAM TYPE 6 OR MODIFIED	BEAM TYPE 7 (BULB TEE)
6	12	16	16	---	22
6-1/2	---	---	---	22	---
7(A)	12	16	16	---	---
7-1/2(B)	---	---	---	22	---
8(A)	12	16	16	---	---
8-1/2(B)	---	---	---	22	---

(A) Modified Beam Type 2, 3 or 4.

(B) Modified Beam Type 6.

(C) If available, otherwise bend all bottom strands.

GIRDER DESIGN (CONT.) Design
REINFORCEMENT AND DIMENSIONS

	TABLE OF DIMENSIONS												
	BEAM TYPE 2			BEAM TYPE 3			BEAM TYPE 4			BEAM TYPE 6			BEAM TYPE 7
WEB	6″	7″	8″	6″	7″	8″	6″	7″	8″	6 1/2″	7 1/2″	8 1/2″	6″
"a"	5 1/2″	5 1/2″	5 1/2″	5 1/2″	5 1/2″	5 1/2″	5 1/2″	5 1/2″	5 1/2″	8 3/4″	8 3/4″	8 3/4″	10″
"b"	4″	4″	4″	4″	4″	4″	4″	4″	4″	4″	4″	4″	4″
"c"	6″	6″	6″	6″	6″	6″	6″	6″	6″	7″	7″	7″	4 1/2″
"d"	3 1/4″	3 1/4″	3 1/4″	5 1/8″	5 1/8″	5 1/8″	6 1/4″	6 1/4″	6 1/4″	4 1/8″	4 1/8″	4 1/8″	4 1/8″
"e"	13″	14″	15″	13″	14″	15″	13″	14″	15″	18″	19″	20″	20″
"f"	2″	2″	2″	2″	2″	2″	2″	2″	2″	3″	3″	3″	7″
"g"	11″	12″	13″	11″	12″	13″	11″	12″	13″	22″	23″	24″	2′-11 1/2″
"h"	2′-6″	2′-6″	2′-6″	3′-1″	3′-1″	3′-1″	3′-7″	3′-7″	3′-7″	4′-4″	4′-4″	4′-4″	5′-10 1/2″
"i"	3′-0 1/2″	3′-0 1/2″	3′-0 1/2″	3′-7 1/2″	3′-7 1/2″	3′-7 1/2″	4′-1 1/2″	4′-1 1/2″	4′-1 1/2″	4′-10 1/2″	4′-10 1/2″	4′-10 1/2″	6′-5″

Note: Dimensions shown above are out to out.

	TOTAL BAR LENGTH												
	BEAM TYPE 2			BEAM TYPE 3			BEAM TYPE 4			BEAM TYPE 6			BEAM TYPE 7
WEB	6″	7″	8″	6″	7″	8″	6″	7″	8″	6 1/2″	7 1/2″	8 1/2″	6″
B1	4′-1″	4′-1″	4′-1″	4′-8″	4′-8″	4′-8″	5′-2″	5′-2″	5′-2″	5′-11″	5′-11″	5′-11″	7′-8″
B2	3′-6″	3′-6″	3′-6″	4′-1″	4′-1″	4′-1″	4′-7″	4′-7″	4′-7″	5′-4″	5′-4″	5′-4″	7′-0″
C1	13″	14″	15″	13″	14″	15″	13″	14″	15″	2′-2″	2′-3″	2′-4″	3′-6″
D1	2′-4″	2′-5″	2′-6″	2′-5″	2′-6″	2′-7″	2′-7″	2′-8″	2′-9″	3′-0″	3′-1″	3′-2″	3′-1″

Note: For girders that have stepped top flanges, create new B1 and C1 Bars and adjust Bar Lengths for step heights.

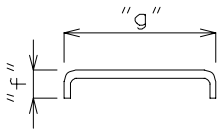

C1 BAR
(Beam Types 2 - 6)

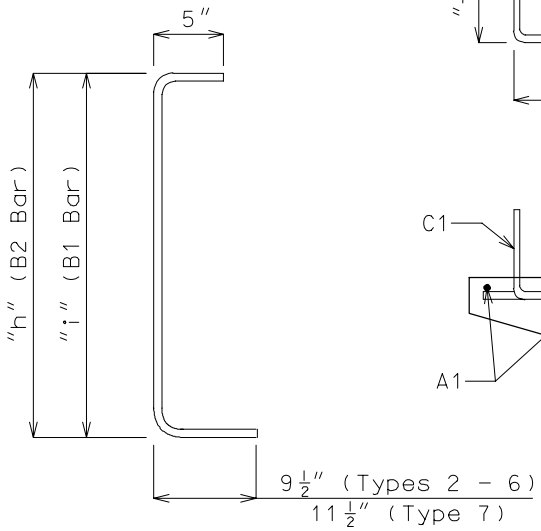

B1 & B2 BAR

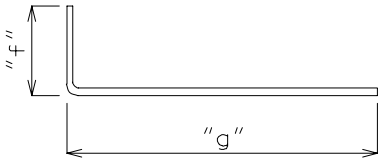

C1 BAR
(Beam Type 7)

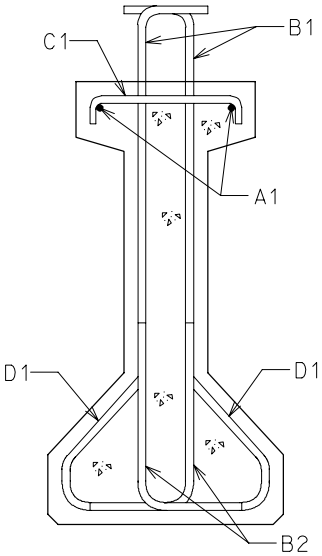

SECTION THRU GIRDER
(Typ. for Beam Types 2 - 6)

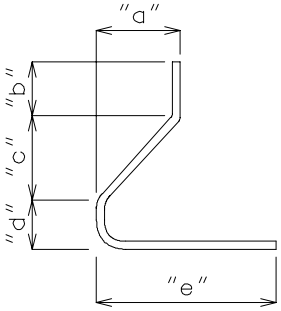

D1 BAR

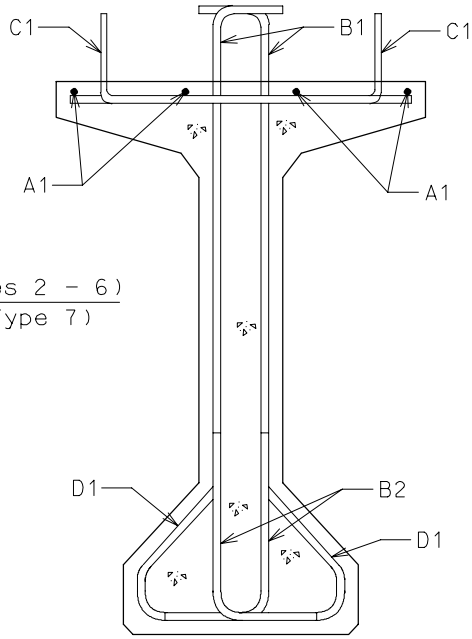

SECTION THRU GIRDER
(Beam Type 7)

GIRDER DESIGN (CONT.) Design

MAXIMUM ALLOWED SPAN LENGTHS (PRSTRESSED CONCRETE I-BEAM)

HS20 MODIFIED LOADING						
ROADWAY WIDTH	GDR. NO. & SPA.	MAXIMUM SPAN LENGTHS				
		TYPE 2	TYPE 3	TYPE 4	TYPE 6	TYPE 7
26'-0"	4 @ 7'-6"	52'-0"	65'-0"	75'-0"	90'-0"	99'-0"
28'-0"	4 @ 8'-2"	50'-0"	62'-0"	71'-0"	87'-0"	99'-0"
30'-0"	4 @ 8'-8"	48'-0"	60'-0"	69'-0"	86'-0"	98'-0"
32'-0"	4 @ 9'-2"	47'-0"	58'-0"	67'-0"	84'-0"	99'-0"
36'-0"	5 @ 8'-2"	50'-0"	62'-0"	71'-0"	89'-0"	97'-0"
38'-0" (Unsymm.)	5 @ 8'-8"	48'-0"	59'-0"	69'-0"	86'-0"	100'-0"
40'-0"	5 @ 9'-0"	47'-0"	58'-0"	68'-0"	86'-0"	99'-0"
44'-0"	5 @ 9'-9"	45'-0"	56'-0"	65'-0"	82'-0"	99'-0"

HS20-44 ALT. MILITARY LOADING						
ROADWAY WIDTH	GDR. NO. & SPA.	MAXIMUM SPAN LENGTHS				
		TYPE 2	TYPE 3	TYPE 4	TYPE 6	TYPE 7
26'-0"	4 @ 7'-6"	55'-0"	68'-0"	79'-0"	99'-0"	108'-0"
28'-0"	4 @ 8'-2"	53'-0"	65'-0"	75'-0"	95'-0"	108'-0"
30'-0"	4 @ 8'-8"	51'-0"	63'-0"	73'-0"	94'-0"	107'-0"
32'-0"	4 @ 9'-2"	50'-0"	61'-0"	71'-0"	93'-0"	109'-0"
36'-0"	5 @ 8'-2"	53'-0"	65'-0"	75'-0"	98'-0"	107'-0"
38'-0" (Unsymm.)	5 @ 8'-8"	51'-0"	63'-0"	73'-0"	95'-0"	110'-0"
40'-0"	5 @ 9'-0"	50'-0"	62'-0"	71'-0"	94'-0"	108'-0"
44'-0"	5 @ 9'-9"	48'-0"	59'-0"	69'-0"	91'-0"	109'-0"

Criteria used in finding maximum span lengths:

1.) Three equal spans
2.) Low-Relaxation, one-half inch diameter strands
3.) Only standard strand arrangement
4.) Class A1 Concrete with f'c = 6000 psi and f'ci = 4500 psi
5.) Minimum web thickness and flange width
6.) 16 inch barrier curb
7.) #6 Longitudinal temperature reinforcement (max.) with #8 @ 5" cts. Maximum negative moment reinforcement (maximum allowed configuration).
8.) Effective flange widths for type 7 girders (bulb-tees) used to determine maximum lengths are based on AASHTO 9.8.3.
9.) Maximum shear reinforcement in girder web is #5 @ 5" cts.
10.) Pre-Cast Panel Slab

GIRDER DESIGN (CONT.) **Design**

NEGATIVE MOMENT BAR CUT-OFF: (WORKING STRESS CONTROLLING)
Area of slab bars required and stress in the slab bars are printed in program BR200.

Determine stress of the area of slab bars input into program at a point where the area required is larger than that input.

Interpolate along a straight line to where the stress is 24,000 psi.

Example:

60′ Span, 8″ Bearing Pad
Distance Cl. to Cl. of Bearing = 58′-7″
Area slab bars input = 1.80 in.^{2}

Pt.	Area Slab Bars	Stress Slab Bars
0.9	1.80	-5,408.1
1.0 (Cl. Brg.)	10.55	-23,693.1

Stress in 1.80 in.^{2} of bars at 1.0 = $\frac{(23{,}693.1)\ (10.55)}{1.80}$

= (138,867.9) psi

Pt. at which stress in 1.80 in.^{2} of bars is equal to 24,000 psi =

$0.9 + \frac{(24{,}000 - 5{,}408.1)}{(138{,}867.9 - 5{,}408.1)\ (10)}$ = 0.914 of ℄ Brg. to ℄ Brg. Span Length

Theoretical Cut-off Length from Cl. Bent:

60′- [(0.914) (58.58′) + 0.42′ + 0.29′] = 5.75′

Actual Cut-off Length of Cl. Bent:

5.75′ + Development Length
or
1/10 of the span
or
8′
} Use Largest

Note: Negative momentbar computations use a cracked section analysis to determine stresses.

GIRDER DESIGN (CONT.) **Design**

NEGATIVE MOMENT BAR CUT-OFF (ULTIMATE STRENGTH CONTROLLING)

Example (Span 1 Length = 58′-0″):

Girder Type 6, f′c(girder) = 5 ksi,
Bearing Pad Length = 8″, Distance ℄ to ℄ of Bearing = 56′-7″,
b = width of bottom flange of girder = 24″,
Load Factor Design, Ø = strength reduction factor = 1.0 for P/S member

Slab reinforcing steel fy = 60 ksi,
As = Area of slab bars in effective flange for cut-off point
As = 1.84 sq.in.(by BR200 input)
d = effective depth = distance from compression face of concrete to centroid of tension steel
d = 59.6875″

C = compression force = 0.85(f′c)(b)(a)
T = tension force = (As)(fy)
T = (1.84 sq.in.)(60 ksi) = 110.4 kips

Equating C = T gives

$$a = \frac{T}{(0.85)(f'c)(b)}$$

$$a = \frac{110.4 \text{ kips}}{(0.85)(5 \text{ ksi})(24'')} = 1.0824''$$

Strength Mu = Ø T(d-a/2)
Strength Mu = (1.0)(110.4 kips)(59.6875″-1.0824″/2)/12 = 544.15 kip-ft

Negative Moment due to (LL+I), live load plus impact, for truck load and lane laod, and DL2 Moment with FWS(future wearing surface) at each tenth point (℄ to ℄ of Bearing) are printed in the BR200 program.

DL2 = total composite uniform Dead Load
In this example DL2(W/FWS) = DL(SBC) + DL(FWS).
DL(SBC) = weight of safety barrier curb = 170 lb/ft (for each girder)
DL(FWS) = weight of future wearing surface = 228 lb/ft (for each girder)
DL2(w/FWS) = 170+228 = 398 lb/ft
DL2(w/o FWS) = (DL2 w/FWS)(170/398) = 0.4217(DL2 w/FWS)

GIRDER DESIGN (CONT.)

NEGATIVE MOMENT BAR CUT-OFF: (ULTIMATE STRENGTH CONTROLLING)

Example (Span 1) (Continued):

TABLE 1.1-11

Span 1	Load from BR200 Program				LF Load Mu = 2.17 (LL+I) + 1.3 DL2			
	Neg. (LL+I) Moment		DL2 Moment		Truck Load		Lane Load	
Girder Point	Truck	Lane	W/FWS	W/O FWS(✳)	DL2 (W/FWS)	DL2 (W/O FWS)	DL2 (W/FWS)	DL2 (W/O FWS)
0.0	0.00	0.00	0.00	0.00	0.00	0.00	0.00	0.00
0.1	-43.56	-34.92	39.47	16.86	-43.21	-72.61	-24.47	-53.86
0.2	-87.11	-69.85	65.88	28.14	-103.38	-152.45	-65.93	-114.99
0.3	-130.65	-104.76	79.22	33.84	-180.52	-239.52	-124.34	-183.34
0.4	-174.21	-139.67	79.50	33.96	-274.69	-333.89	-199.73	-258.94
0.5	-217.75	-174.58	66.72	28.50	-385.78	**-435.47**	-292.10	-341.79
0.6	-261.31	-209.51	40.88	17.46	-513.90	**-544.34**	-401.49	-431.94
0.7	-304.85	-244.42	1.97	0.84	-658.96	-660.43	-527.83	-529.30
0.8	-348.40	-279.36	-50.00	-21.36	-821.03	-783.79	-671.21	-633.98
0.9	-391.96	-354.07	-115.04	-49.14	-1000.11	-914.43	-917.88	-832.21
1.0	-435.52	-517.03	-193.13	-82.49	-1196.15	-1052.32	-1373.02	-1229.20
					Case 1	Case 2	Case 3	Case 4

All moments in Table are in kip-ft.

(✳) See page 1.1-10 for calculation.

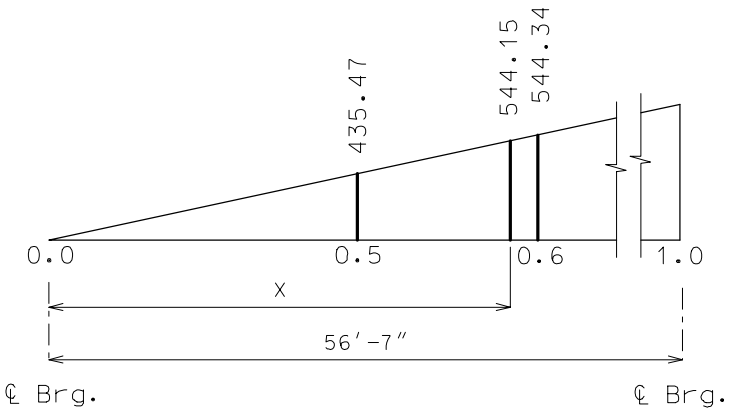

Interpolate the worst case above along a straight line to determine the point at which the moment above is equal to Strength Mu of 544.15 kip-ft.

$$\frac{X - 0.5}{0.6 - 0.5} = \frac{(-544.15) - (-435.47)}{(-544.34) - (-435.47)}$$

X = 0.5998 (of ℄ to ℄ brg. span length)

Theoretical cut-off length from ℄ bent = (1.0-0.5998)(56.5833')+0.4167'+0.2917' = 23.3516'

Actual cut-off length = 23.35' + Development Length <------Controls
or 1/10 (span) = (0.1)(58') = 5.80'
or 8'-0" minimum

MINIMUM PRESTRESSING STRANDS:

The following instructions are provided for checking the required minimum prestressing strands for Prestressed Girders.

Standard Girders except Bulb Tee Girders designed by the BR200 Prestress Computer Program do not require the checking of minimum strands. When a strand selection is forced to other than a standard strand arrangement as shown in the Bridge Manual, additional checks are required.

All Girders are considered to meet the minimum prestressing strand requirements of AASHTO 9.18.2 when MU provided is greater than 1.33 times MU required.

The Formula needed to make a check of minimum strands with an example application follows:

CRACKING STRESS:

$$f_{MR} = 7.5\sqrt{f'c}$$

$$f_{ACT} = \frac{P}{A_N} + \frac{PeY_B}{I_N} - \frac{M_{DL1}Y_B}{I_N}$$

$$f_{ACT} + f_{MR} = \frac{M_{MR}\ Y_{BC}}{I_C}$$

$$M_{MR} = \frac{I_C}{Y_{BC}}\ (f_{ACT} + f_{MR})$$

$$1.2\ (M_{MR} + M_{DL1}) < M_{PROV}$$

f_{ACT} = Stress due to P/S and DL1 (psi)

f_{MR} = Modulus of rupture (psi)

$f'c$ = Compressive strength of concrete at 28 days (psi)

P = Prestress force (after losses) causing compression in bottom fiber (lbs.)

e = Eccentricity of strands from N.A. (in.)

Y_B = Non-composite distance to gravity center from extreme bottom fiber (in.)

Y_{BC} = Composite distance to gravity center from extreme bottom fiber (in.)

A_N = Non-composite area (sq. in.)

I_N = Non-composite moment of inertia (in.^{4})

CRACKING STRESS (CONT.):

I_C = Composite moment of inertia (in.^{4})

M_{DLI} = Moment service load dead load I (in.-lbs.)

M_{MR} = Moment required to increase actual stress in compression to cracking stress in tension.

MU_{PROV} = Ultimate moment provided from BR200.

MU_{REQ} = Ultimate moment required from BR200.

Example - MInimum Strand:

$f_{MR} = 7.5\sqrt{5{,}000}$ M_U Required = 1,176 (kips-ft.)

f_{MR} = 530 psi M_U Provided = 1,640 (kips-ft.)

$$f_{ACT} = \frac{213{,}453}{644.1} + \frac{213{,}453 \times 23.89 \times 25.89}{236{,}105} - \frac{314{,}908 \times 12 \times 25.89}{236{,}105}$$

f_{ACT} = 331 + 559 - 414

f_{ACT} = 476 psi

$f_{ACT} + f_{MR}$ = 476 + 530 = 1,006

$$M_{MR} = \frac{592{,}854\ (1{,}006)}{42.6\ (12{,}000)}$$

M_{MR} = 1,166.7 (kips-ft.)

$1.2\ (M_{MR} + M_{DLI})$ = 1.2 (1,166.7 + 314.9)
= 1,777.9 > 1,640
MU_{PROV} AASHTO 9.18.1

Eight strands does not satisfy AASHTO 9.18.2 however,

M_U Provided > 1.33 (M_U Required)

$1{,}640^{(kips\text{-}ft.)} > 1{,}564^{(kips\text{-}ft.)}$

Eight strands O.K

GIRDER DESIGN (CONT.) **Design**

DRAPED STRANDS:

Draped strands, although they add to the shear strength of the girder, are primarily used to keep the girder stresses at the end, both top and bottom, within allowable limits while developing the full capacity of the girder and slab at midspan.

The draped strands should be held down at points 0.4 of the distance from each end of the girder.

STRAND FAILURE:

Jacking force applied to prestress strands produces an excessive vertical uplift in short spans on tall girders resulting in failure of draped strand tie downs.

Short spans less than 40 feet are to use straight strands for all girders greater 2'-8" tall. Use at least two straight strands at the top of the girder when straight strands are used. Where straight strands will not work a single hold down point may be used.

Investigate the possibility of using all straight strands when strength check of a hold-down device exceeds allowable (See this section page 1.1-15).

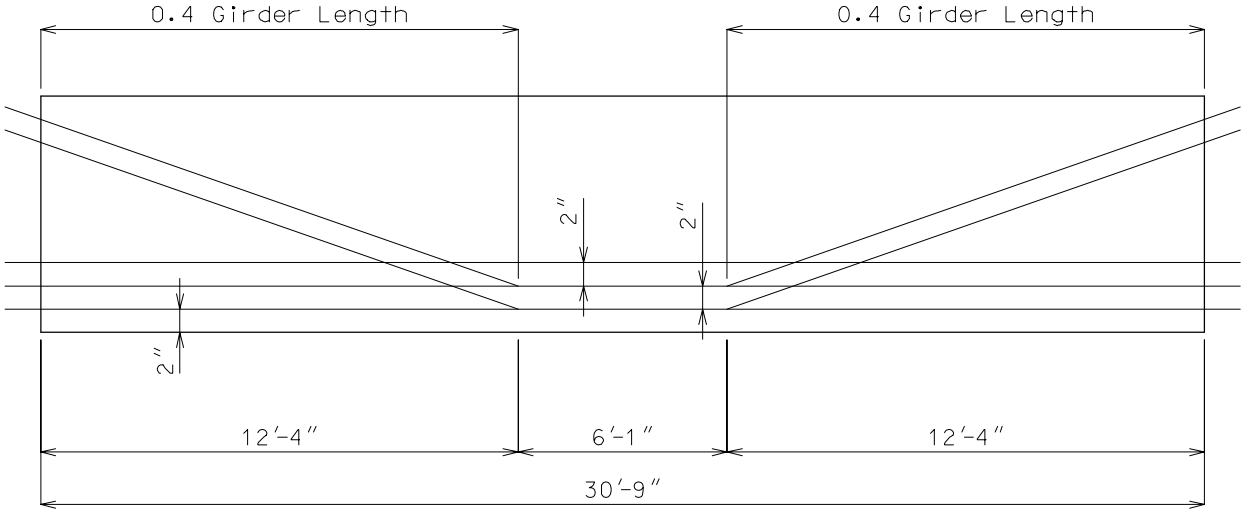

TYPICAL DRAPED STRAND LAYOUT WITH FAILURE

Strands are normally 1/2" Dia. (0.153 sq. in.) low relaxation strands grade 270.

Note: Strand distance to full development length = 8'-5".
(Based on FHWA recommendation.)

GIRDER DESIGN (CONT.) **Design**

HOLD-DOWN DESIGN CHECK

Prestress girders with draped strands require strength checks of hold-down devices not to exceed allowable limits.

An example of the strength check of a hold-down device for a 4′-6″ girder with three rows of two strands draped is as follows:
The maximum capacity for the hold-down is a total of 42 kips. The maximum capacity per strand is 5 kips with 10 kips maximum for a two strand row due to bolt shear.

Check 4′-6″ Girder Type 6
Seq. 143 18-strands 6 draped

Compute "H"
4′-6″ = 54″
-4″ to ℄ top draped strands at end
-6″ to ℄ top draped strands at hold down
H = 44″ = 3.67 ft.

Compute "R"

$R = \sqrt{3.67^2 + 24.21^2}$

R = 24.49 ft.

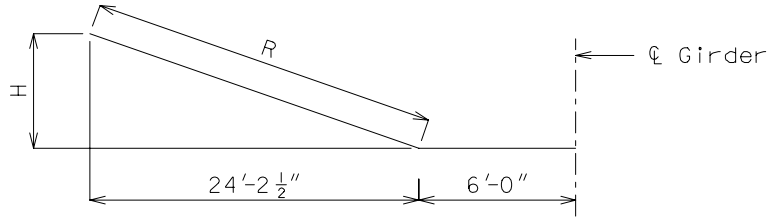

STRAND "A" CONFIGURATION

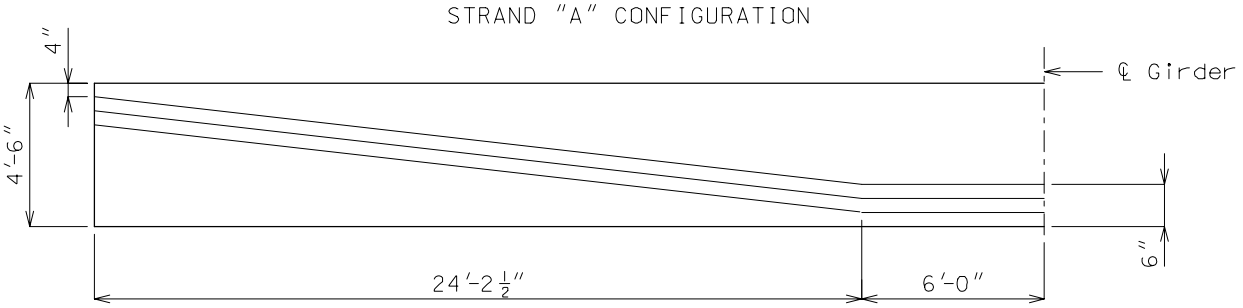

ELEVATION OF PRESTRESS GIRDER

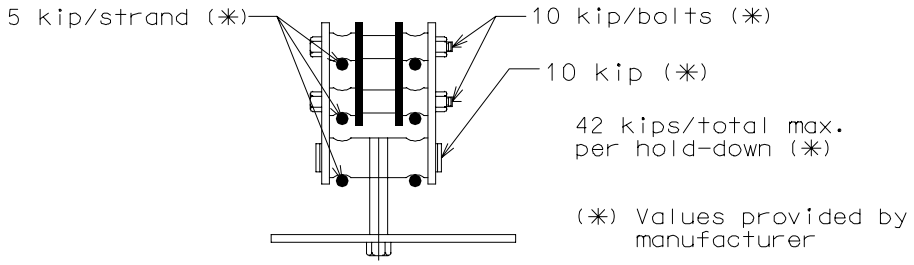

HOLD-DOWN DEVICE

Uplift force per strand = (strand force) x (H/R)

Girder length = 60.42 ft.
Check: 31 kip/strand force
31 x 3.67/24.49 = 4.65 kip/strand < 5 kips, OK uplift/strand less than allow.
9.3 kips/bolt < 10 kips, OK uplift/bolt less than allow.
6 (4.65) = 27.9K < 42K, OK uplift/hold-down less than allow.

If necessary lower draped strand end location to meet criteria or use straight strands. (Applicable to both I-Girders and Double-Tee Girders).

Note: A single point tie down has twice the uplift force.

Design

BEAM TYPE 2
SECTION PROPERTIES AND STRAND ARRANGEMENT (CONTINUOUS SPANS)

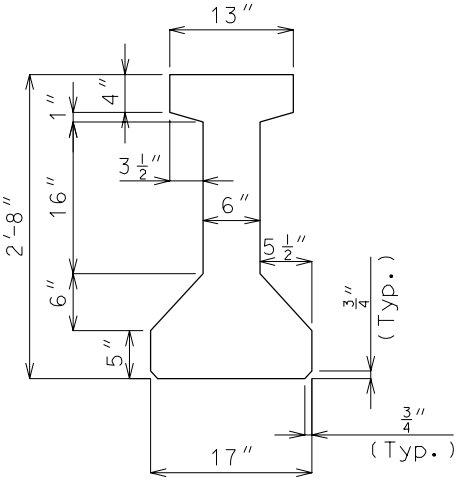

GIRDERS 2A THRU 2C
A = 310.9 SQ. IN.
Y_b= 14.08 IN.
I = 33,974 IN.^{4} (✳)

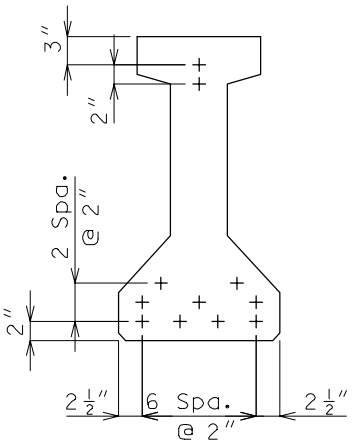

GIRDER 2A
(11 STRANDS)

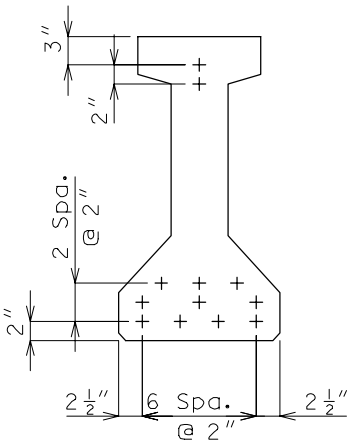

GIRDER 2B
(12 STRANDS)

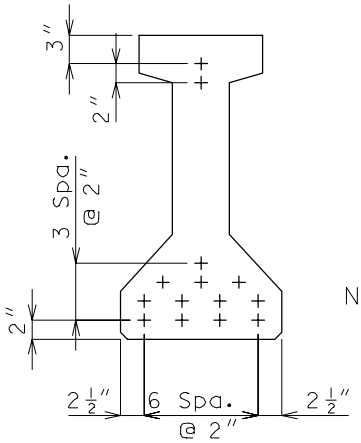

GIRDER 2C
(14 STRANDS)

GIRDER	2A	2B	2C
Initial Prestress kips	341	372	434
Size of Strands	1/2	1/2	1/2
No. of Strands (All Straight)	11	12	14
Bottom of Girder to Center of Gravity of Strands inches	8.0	7.83	7.57

Note:

Investigate the possibility of using all straight strands when strength check of a hold-down device exceeds allowable. (See this section page 1.1-13). All strand arrangements shown on this page have straight strands only.

Strand arrangements other than those shown may be investigated by the designer. For example: rearrange top strands into two vertical rows (This would aid the fabricator when placing B1 Bars).

✳ This value is used to compensate for bottom fillets not at 45° angles as assumed by BR200. (Less than 1% difference).

Design

BEAM TYPE 2, GROUP 1
SECTION PROPERTIES AND STRAND ARRANGEMENT (CONTINUOUS SPANS)

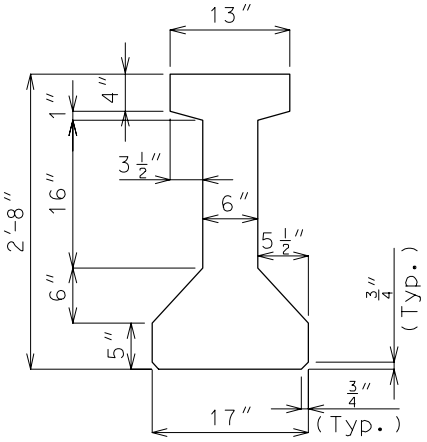

GIRDERS 11 THRU 16
A = 310.9 SQ. IN.
Y_b= 14.08 IN.
I = 33,974 IN.^{4}

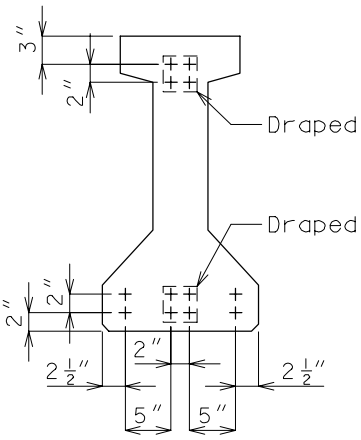

GIRDER SEQ. NO. 11
(8 STRANDS)

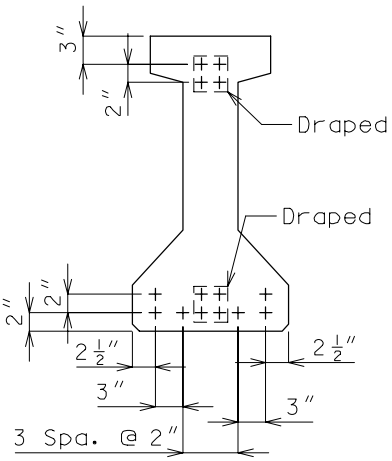

GIRDER SEQ. NO. 12
(10 STRANDS)

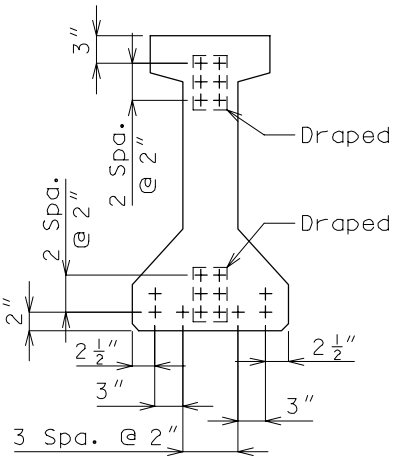

GIRDER SEQ. NO. 13
(12 STRANDS)

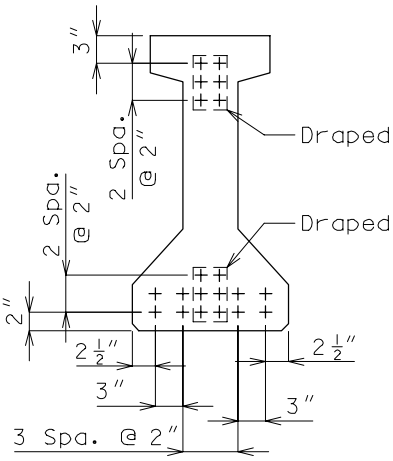

GIRDER SEQ. NO. 14
(14 STRANDS)

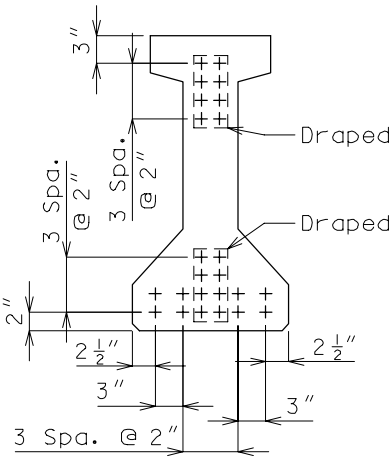

GIRDER SEQ. NO. 15
(16 STRANDS)

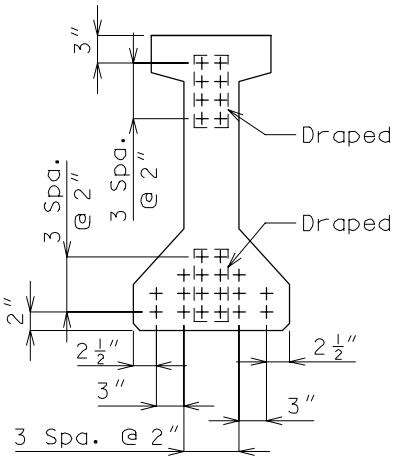

GIRDER SEQ. NO. 16
(18 STRANDS)

ATTENTION: Location of draped strands shown in top flange are at end of girder and draped strands in bottom flange are at centerline.

Design

BEAM TYPE 2, GROUP 2
SECTION PROPERTIES AND STRAND ARRANGEMENT (CONTINUOUS SPANS)

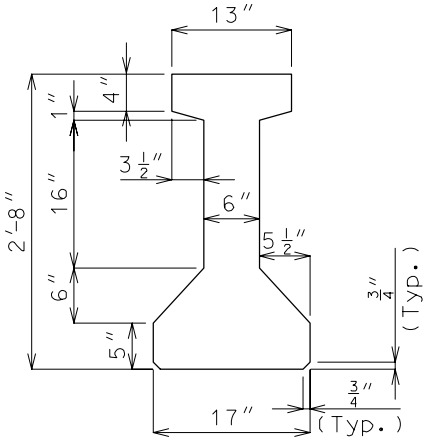

GIRDERS 20 THRU 25
A = 310.9 SQ. IN.
Y_b= 14.08 IN.
I = 33,974 IN.^{4}

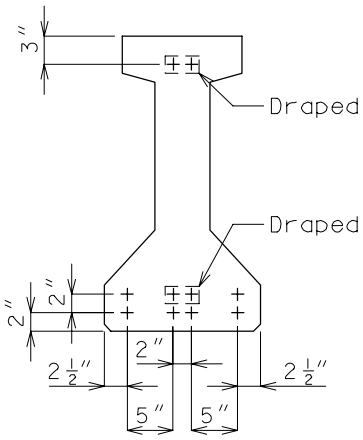

GIRDER SEQ. NO. 20
(8 STRANDS)

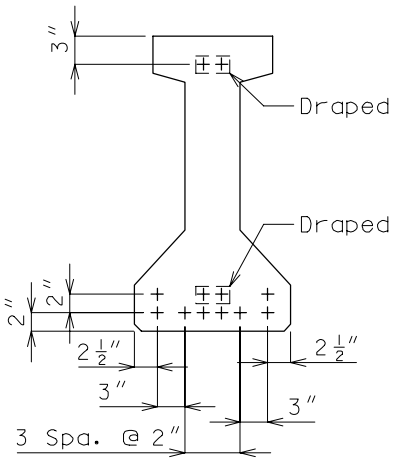

GIRDER SEQ. NO. 21
(10 STRANDS)

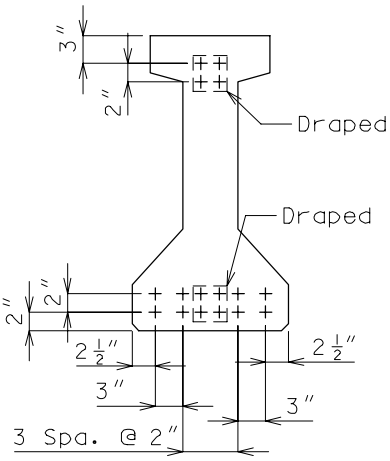

GIRDER SEQ. NO. 22
(12 STRANDS)

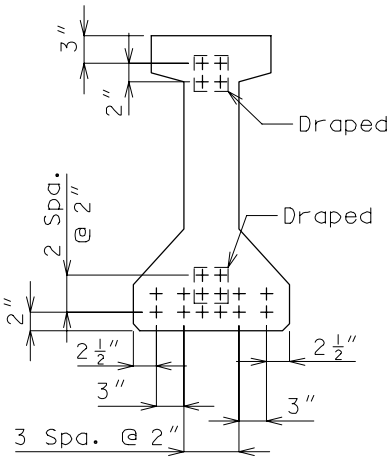

GIRDER SEQ. NO. 23
(14 STRANDS)

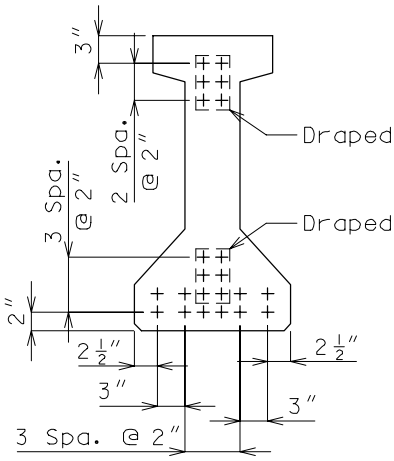

GIRDER SEQ. NO. 24
(16 STRANDS)

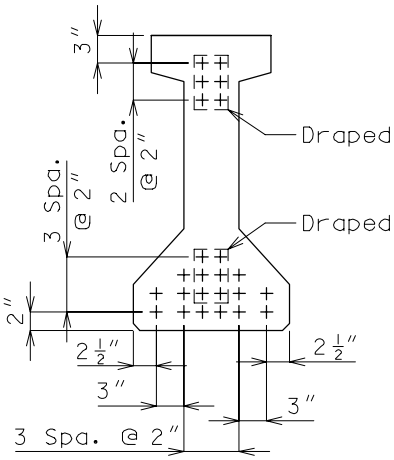

GIRDER SEQ. NO. 25
(18 STRANDS)

ATTENTION: Location of draped strands shown in top flange are at end of girder and draped strands in bottom flange are at centerline.

Design

BEAM TYPE 2, GROUP 3
SECTION PROPERTIES AND STRAND ARRANGEMENT (CONTINUOUS SPANS)

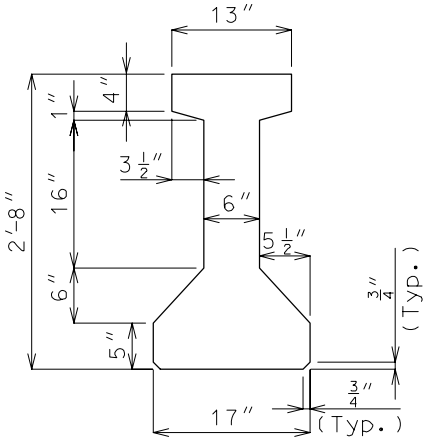

GIRDERS 27 THRU 34
A = 310.9 SQ. IN.
Y_b= 14.08 IN.
I = 33,974 IN.^{4} (✳)

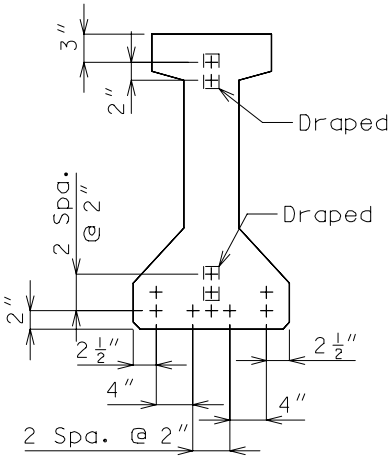

GIRDER SEQ. NO. 27
(9 STRANDS)

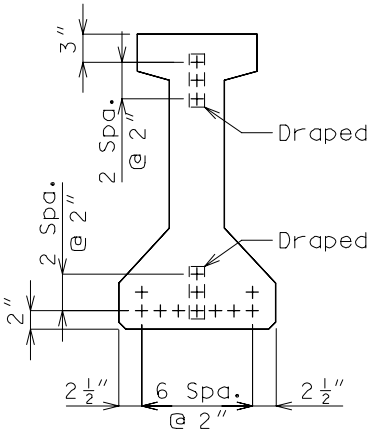

GIRDER SEQ. NO. 28
(11 STRANDS)

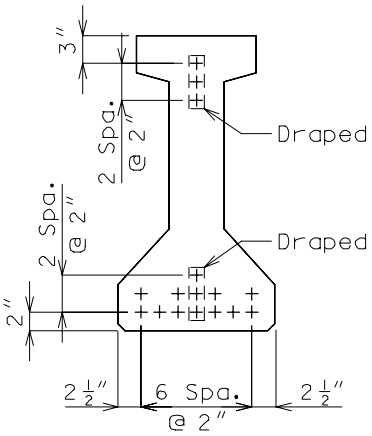

GIRDER SEQ. NO. 29
(13 STRANDS)

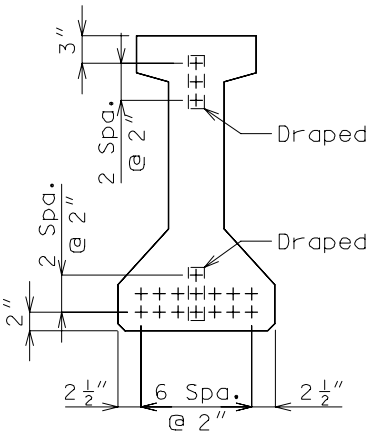

GIRDER SEQ. NO. 30
(15 STRANDS)

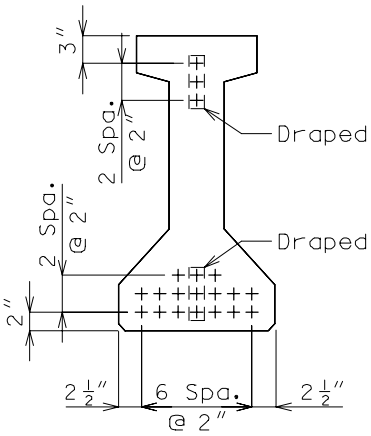

GIRDER SEQ. NO. 31
(17 STRANDS)

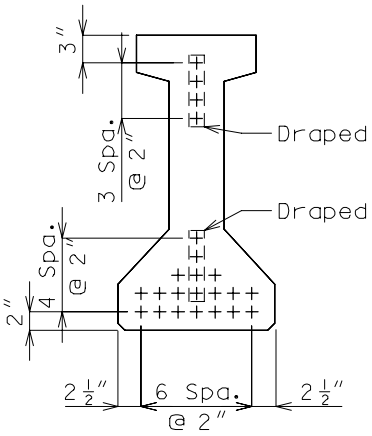

GIRDER SEQ. NO. 32
(19 STRANDS)

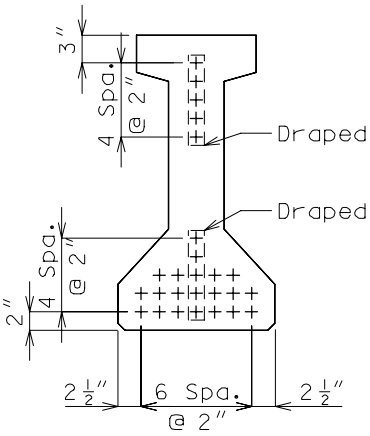

GIRDER SEQ. NO. 33
(21 STRANDS)

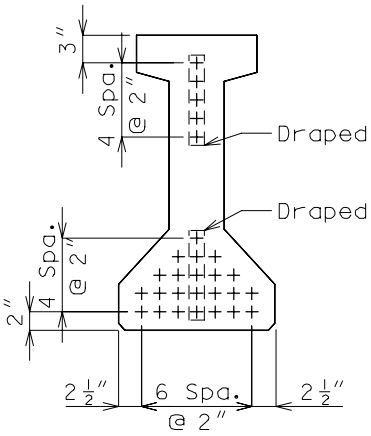

GIRDER SEQ. NO. 34
(23 STRANDS)

ATTENTION: Location of draped strands shown in top flange are at end of girder and draped strands in bottom flange are at centerline.

BEAM TYPE 2 **Design**
SECTION PROPERTIES AND STRAND ARRANGEMENT (CONTINUOUS SPANS)

Note: Shown in the tables are the values of initial prestress force based on 31.0 kips/strand. Check computer output for value of maximum prestress force to be placed as initial prestress force on design plans.

BEAM TYPE 2, GROUP 1 (CONTINUOUS SPANS)						
GIRDER	11	12	13	14	15	16
Initial Prestress kips	248	310	372	434	496	558
Size of Strands	$\frac{1}{2}$	$\frac{1}{2}$	$\frac{1}{2}$	$\frac{1}{2}$	$\frac{1}{2}$	$\frac{1}{2}$
Straight Strands	4	6	6	8	8	10
Draped Strands	4	4	6	6	8	8

BEAM TYPE 2, GROUP 2 (CONTINUOUS SPANS)						
GIRDER	20	21	22	23	24	25
Initial Prestress kips	248	310	372	434	496	558
Size of Strands	$\frac{1}{2}$	$\frac{1}{2}$	$\frac{1}{2}$	$\frac{1}{2}$	$\frac{1}{2}$	$\frac{1}{2}$
Straight Strands	6	8	8	10	10	12
Draped Strands	2	2	4	4	6	6

BEAM TYPE 2, GROUP 3 (CONTINUOUS SPANS)								
GIRDER	27	28	29	30	31	32	33	34
Initial Prestress kips	279	341	403	465	527	589	651	713
Size of Strands	$\frac{1}{2}$	$\frac{1}{2}$	$\frac{1}{2}$	$\frac{1}{2}$	$\frac{1}{2}$	$\frac{1}{2}$	$\frac{1}{2}$	$\frac{1}{2}$
Straight Strands	7	8	10	12	14	15	16	18
Draped Strands	2	3	3	3	3	4	5	5

Note: For strand table used in computer program refer to Computer Manual, Program Number BR200.

Design

BEAM TYPE 3
SECTION PROPERTIES AND STRAND ARRANGEMENT (CONTINUOUS SPANS)

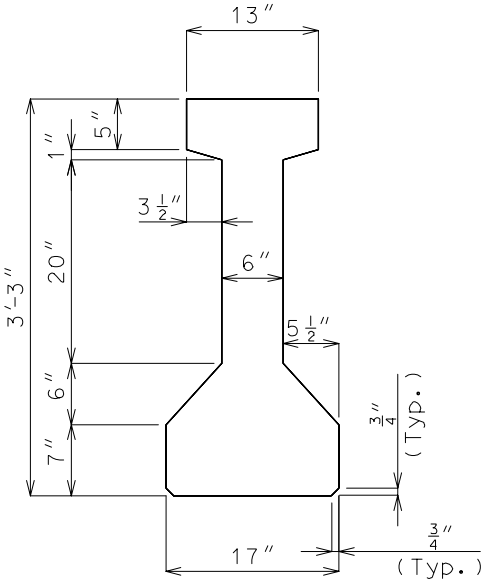

GIRDERS 3A THRU 3C
A = 381.9 SQ. IN.
Y_b= 17.08 IN.
I = 61,841 IN.^{4} (✳)

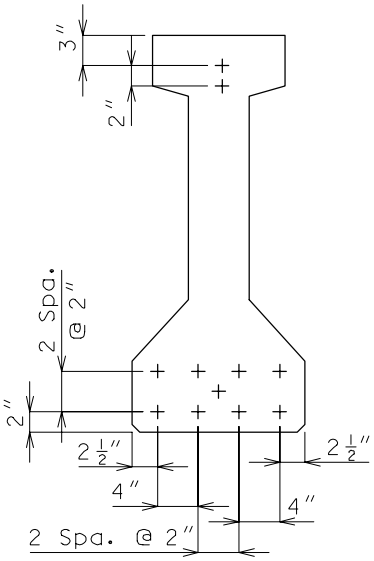

GIRDER 3A
(11 STRANDS)

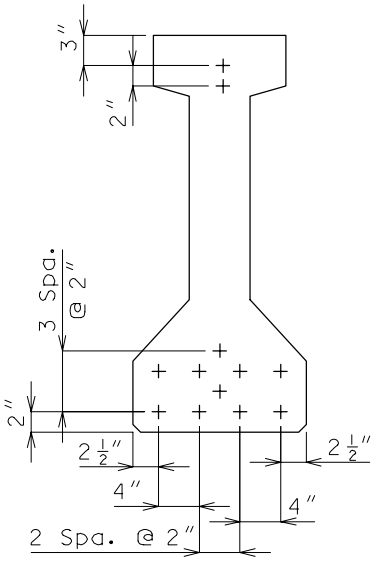

GIRDER 3B
(12 STRANDS)

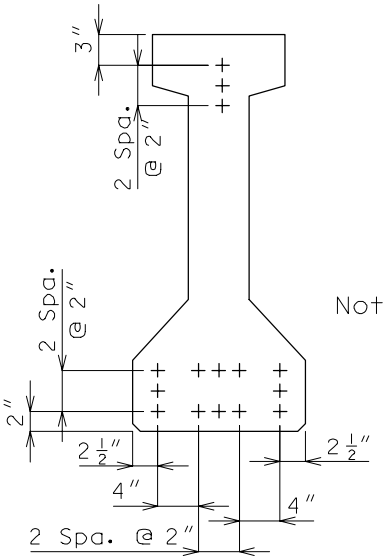

GIRDER 3C
(15 STRANDS)

GIRDER	3A	3B	3C
Initial Prestress kips	341	372	465
Size of Strands	½	½	½
No. of Strands (All Straight)	11	12	15
Bottom of Girder to Center of Gravity of Strands inches	9.64	9.50	10.0

Note:

Investigate the possibility of using all straight strands when strength check of a hold-down device exceeds allowable. (See this section page 1.1-13). All strand arrangements shown on this page have straight strands only.

Strand arrangements other than those shown may be investigated by the designer. For example: rearrange top strands into two vertical rows (This would aid the fabricator when placing B1 Bars).

✳ This value is used to compensate for bottom fillets not at 45° angles as assumed by BR200. (Less than 1% difference).

Design

BEAM TYPE 3, GROUP 1
SECTION PROPERTIES AND STRAND ARRANGEMENT (CONTINUOUS SPANS)

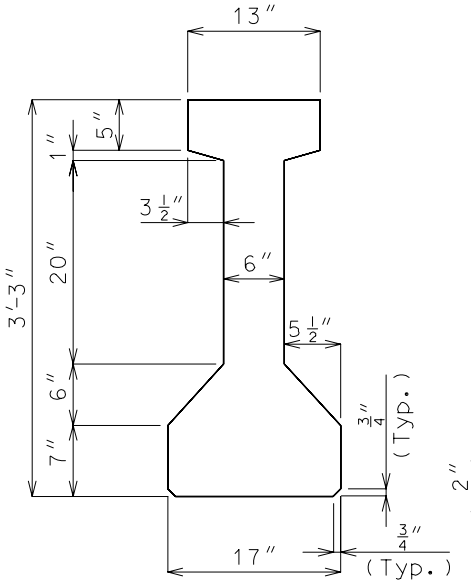

GIRDERS 36 THRU 44
A = 381.9 SQ. IN.
Y_b = 17.08 IN.
I = 61,841 IN.^{4}

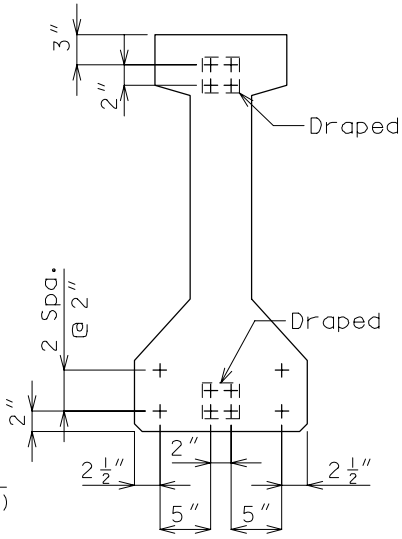

GIRDER SEQ. NO. 36
(8 STRANDS)

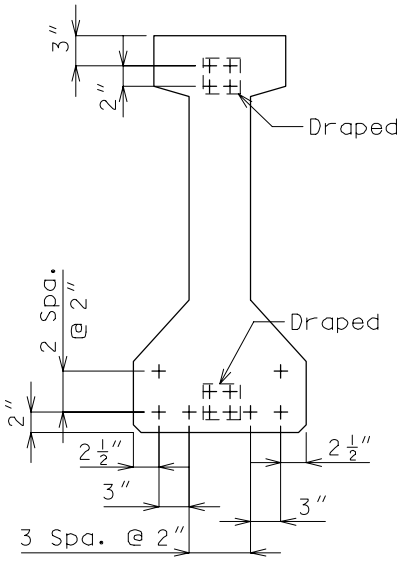

GIRDER SEQ. NO. 37
(10 STRANDS)

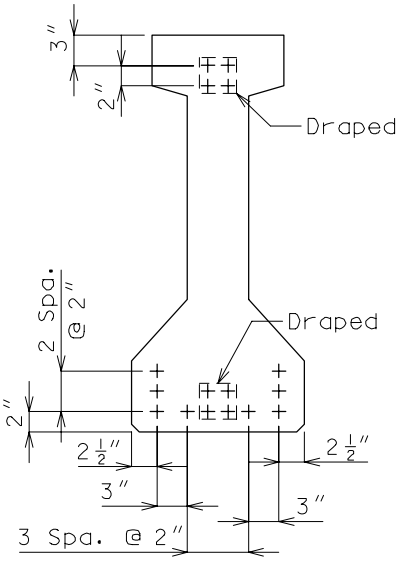

GIRDER SEQ. NO. 38
(12 STRANDS)

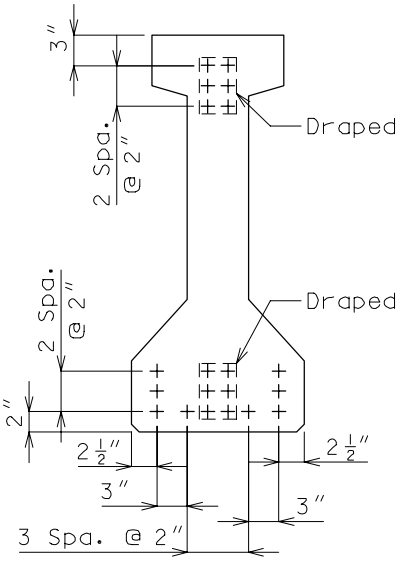

GIRDER SEQ. NO. 39
(14 STRANDS)

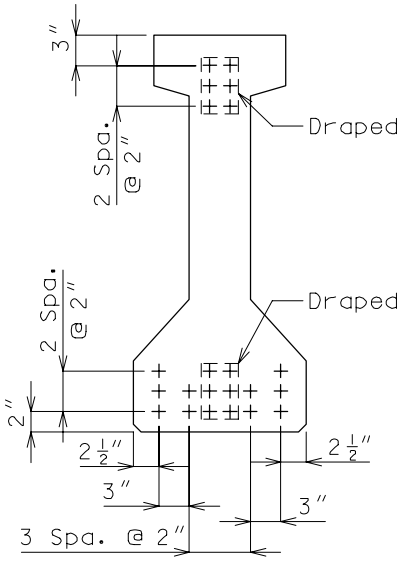

GIRDER SEQ. NO. 40
(16 STRANDS)

ATTENTION: Location of draped strands shown in top flange are at end of girder and draped strands in bottom flange are at centerline.

Design

BEAM TYPE 3, GROUP 1 (CONT.)
SECTION PROPERTIES AND STRAND ARRANGEMENT (CONTINUOUS SPANS)

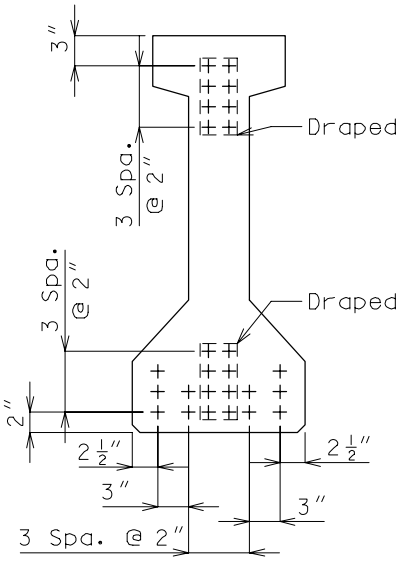

GIRDER SEQ. NO. 41
(18 STRANDS)

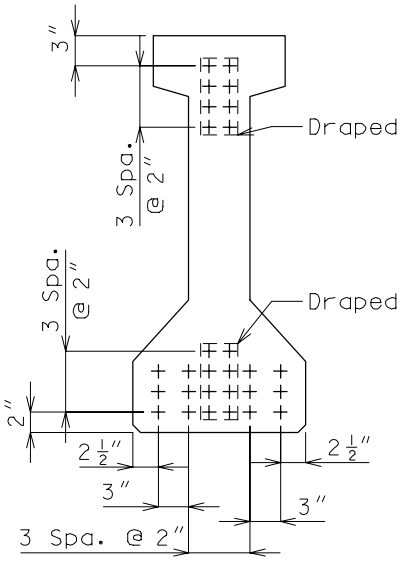

GIRDER SEQ. NO. 42
(20 STRANDS)

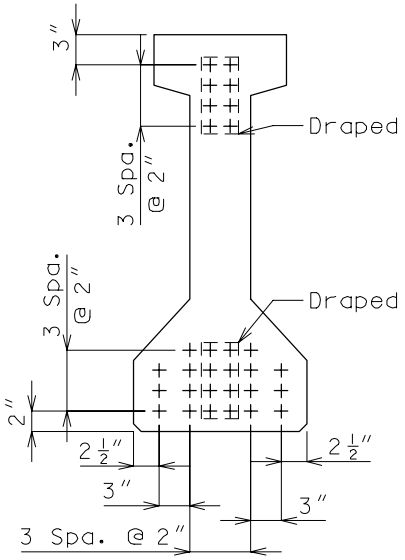

GIRDER SEQ. NO. 43
(22 STRANDS)

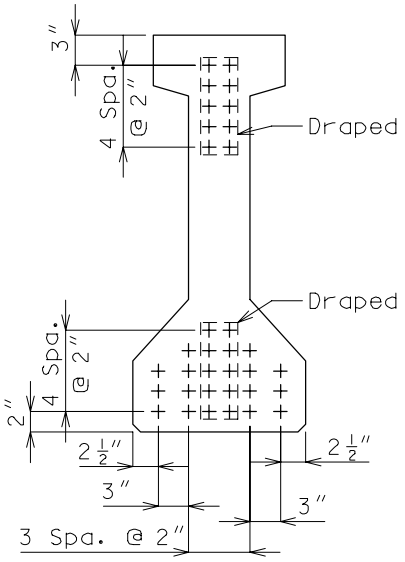

GIRDER SEQ. NO. 44
(24 STRANDS)

ATTENTION: Location of draped strands shown in top flange are at end of girder and draped strands in bottom flange are at centerline.

Design

BEAM TYPE 3, GROUP 2
SECTION PROPERTIES AND STRAND ARRANGEMENT (CONTINUOUS SPANS)

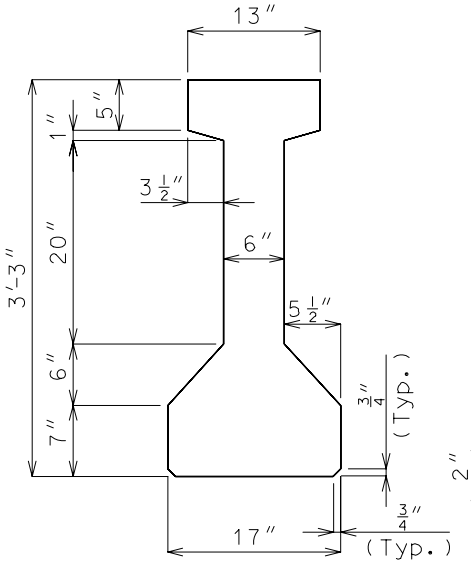

GIRDERS 55 THRU 63
A = 381.9 SQ. IN.
Y_b = 17.08 IN.
I = 61,841 IN.^{4}

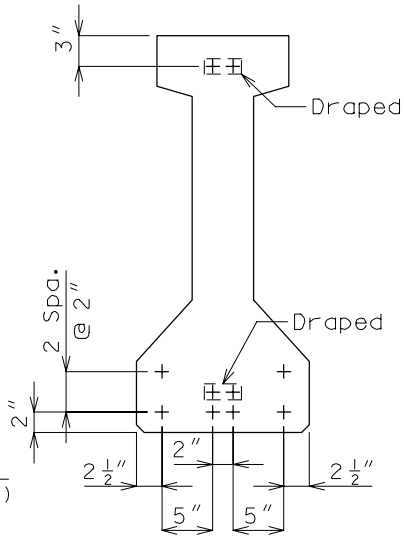

GIRDER SEQ. NO. 55
(8 STRANDS)

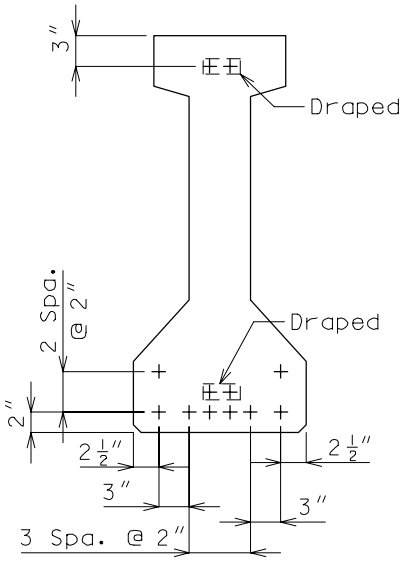

GIRDER SEQ. NO. 56
(10 STRANDS)

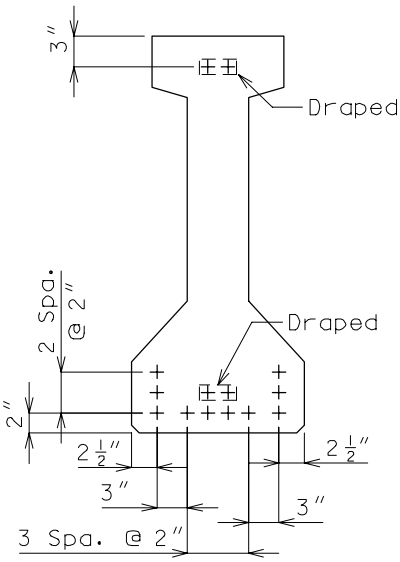

GIRDER SEQ. NO. 57
(12 STRANDS)

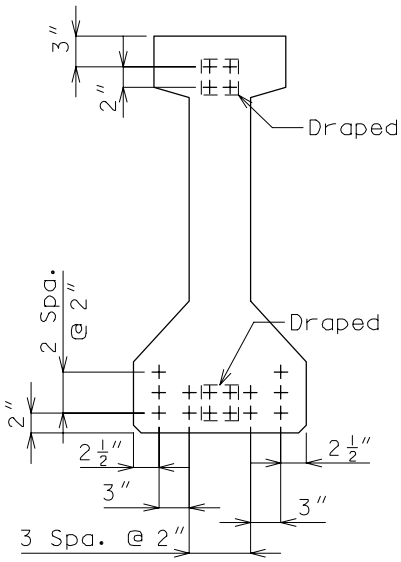

GIRDER SEQ. NO. 58
(14 STRANDS)

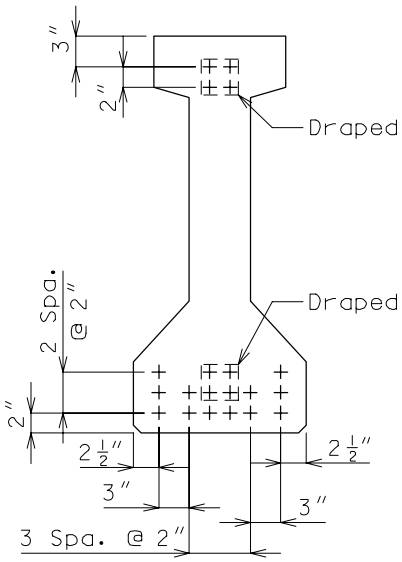

GIRDER SEQ. NO. 59
(16 STRANDS)

ATTENTION: Location of draped strands shown in top flange are at end of girder and draped strands in bottom flange are at centerline.

Design

BEAM TYPE 3, GROUP 2 (CONT.)
SECTION PROPERTIES AND STRAND ARRANGEMENT (CONTINUOUS SPANS)

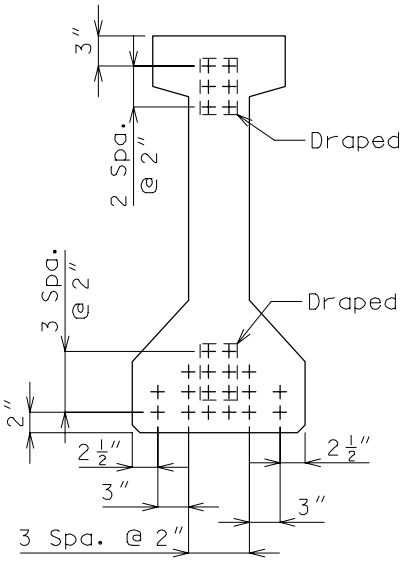

GIRDER SEQ. NO. 60
(18 STRANDS)

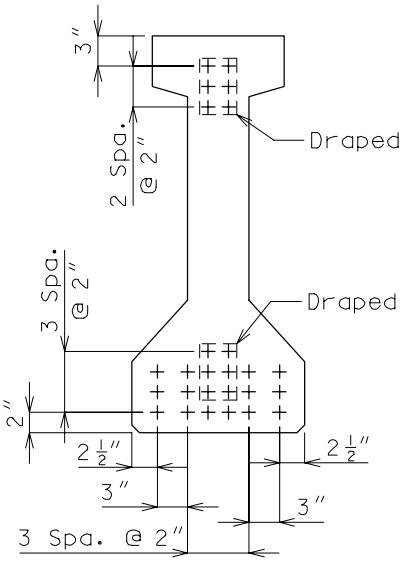

GIRDER SEQ. NO. 61
(20 STRANDS)

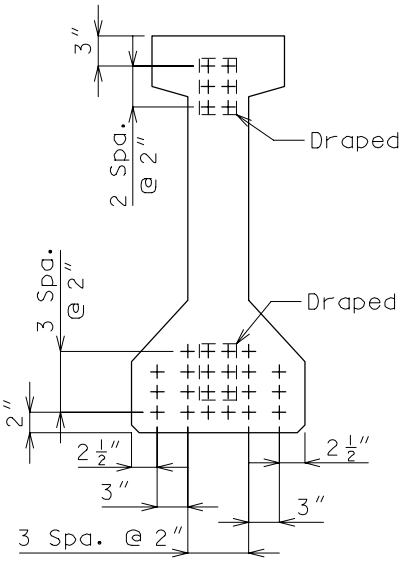

GIRDER SEQ. NO. 62
(22 STRANDS)

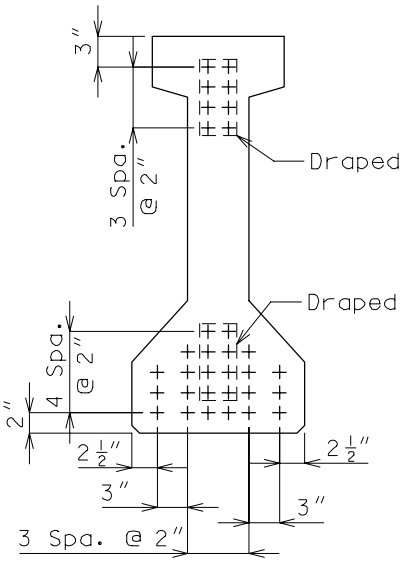

GIRDER SEQ. NO. 63
(24 STRANDS)

ATTENTION: Location of draped strands shown in top flange are at end of girder and draped strands in bottom flange are at centerline.

Design

BEAM TYPE 3, GROUP 3
SECTION PROPERTIES AND STRAND ARRANGEMENT (CONTINUOUS SPANS)

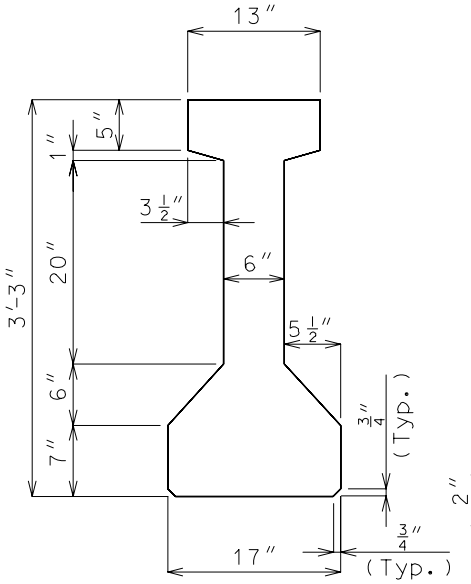

GIRDERS 74 THRU 84
A = 381.9 SQ. IN.
Y_b = 17.08 IN.
I = 61,841 IN.^{4}

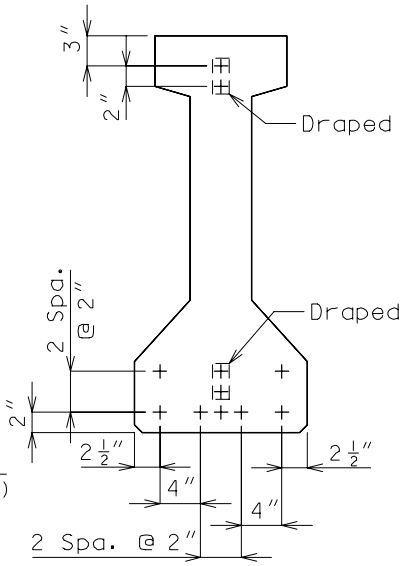

GIRDER SEQ. NO. 74
(9 STRANDS)

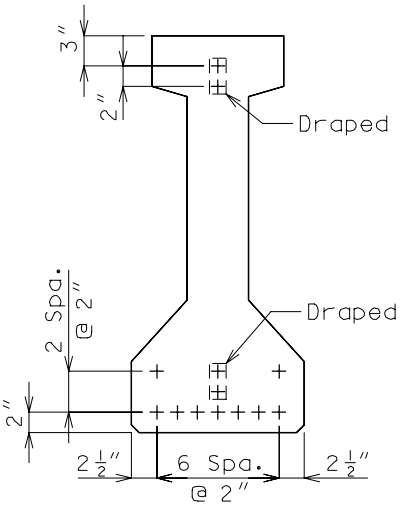

GIRDER SEQ. NO. 75
(11 STRANDS)

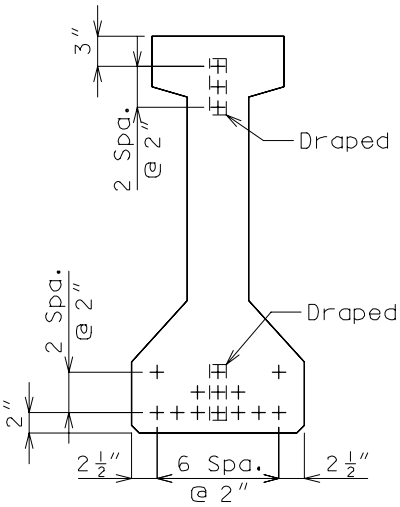

GIRDER SEQ. NO. 76
(13 STRANDS)

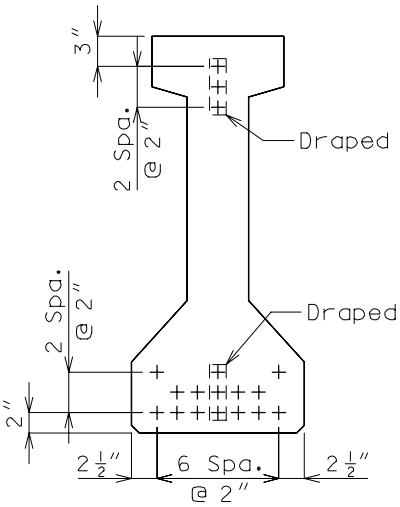

GIRDER SEQ. NO. 77
(15 STRANDS)

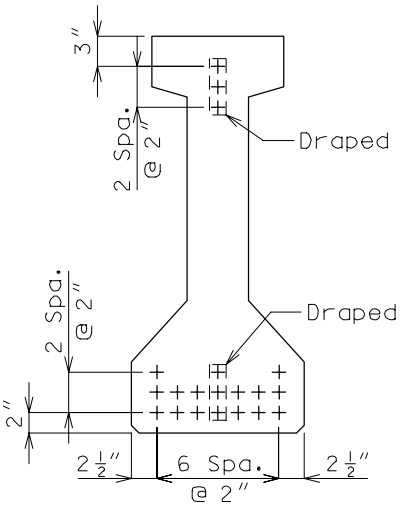

GIRDER SEQ. NO. 78
(17 STRANDS)

ATTENTION: Location of draped strands shown in top flange are at end of girder and draped strands in bottom flange are at centerline.

Design

BEAM TYPE 3, GROUP 3 (CONT.)
SECTION PROPERTIES AND STRAND ARRANGEMENT (CONTINUOUS SPANS)

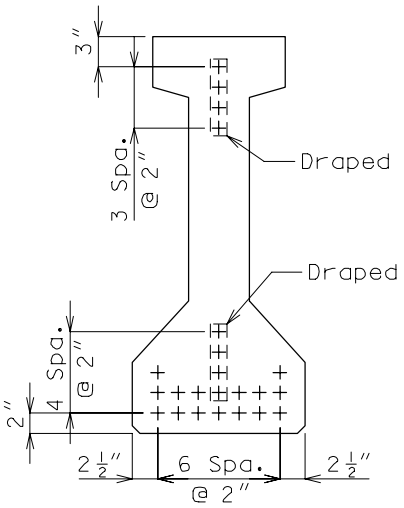

GIRDER SEQ. NO. 79
(19 STRANDS)

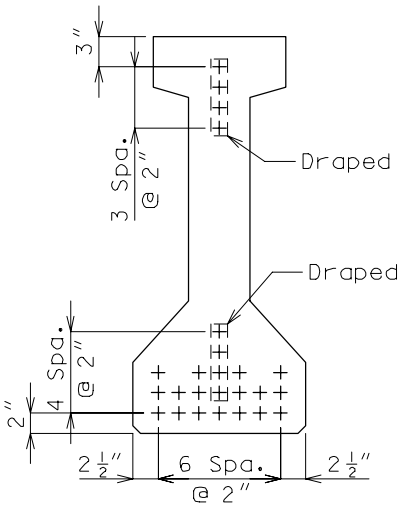

GIRDER SEQ. NO. 80
(21 STRANDS)

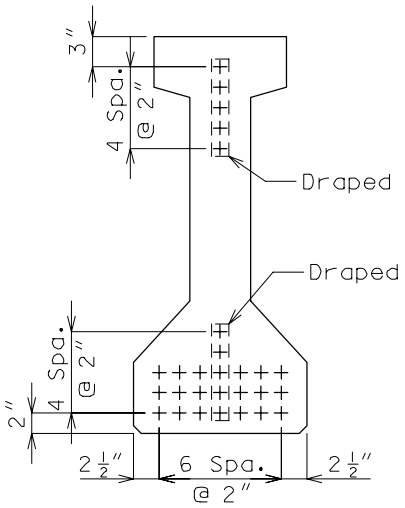

GIRDER SEQ. NO. 81
(23 STRANDS)

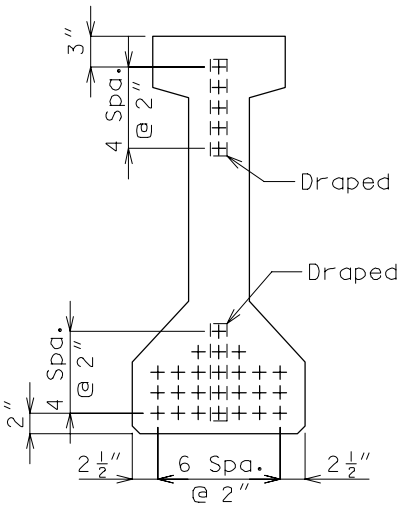

GIRDER SEQ. NO. 82
(25 STRANDS)

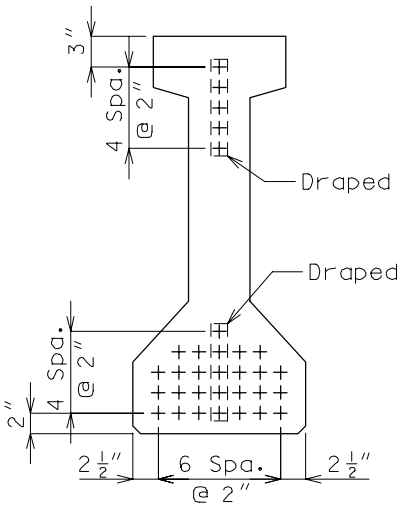

GIRDER SEQ. NO. 83
(27 STRANDS)

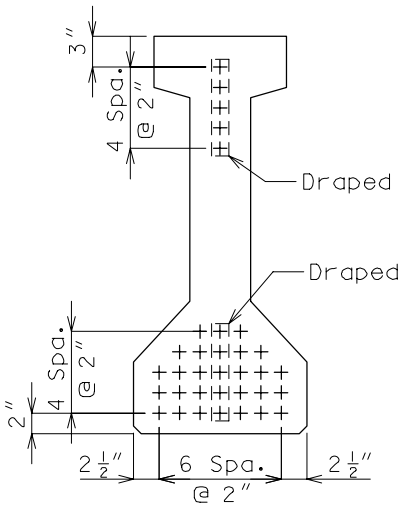

GIRDER SEQ. NO. 84
(29 STRANDS)

ATTENTION: Location of draped strands shown in top flange are at end of girder and draped strands in bottom flange are at centerline.

BEAM TYPE 3
SECTION PROPERTIES AND STRAND ARRANGEMENT (CONTINUOUS SPANS)

Note: Shown in the tables are the values of initial prestress force based on 31.0 kips/strand. Check computer output for value of maximum prestress force to be placed as initial prestress force on design plans.

BEAM TYPE 3, GROUP 1 (CONTINUOUS SPANS)									
GIRDER	36	37	38	39	40	41	42	43	44
Initial Prestress kips	248	310	372	434	496	558	620	682	744
Size of Strands	$\frac{1}{2}$	$\frac{1}{2}$	$\frac{1}{2}$	$\frac{1}{2}$	$\frac{1}{2}$	$\frac{1}{2}$	$\frac{1}{2}$	$\frac{1}{2}$	$\frac{1}{2}$
Straight Strands	4	6	8	8	10	10	12	14	14
Draped Strands	4	4	4	6	6	8	8	8	10

BEAM TYPE 3, GROUP 2 (CONTINUOUS SPANS)									
GIRDER	55	56	57	58	59	60	61	62	63
Initial Prestress kips	248	310	372	434	496	558	620	682	744
Size of Strands	$\frac{1}{2}$	$\frac{1}{2}$	$\frac{1}{2}$	$\frac{1}{2}$	$\frac{1}{2}$	$\frac{1}{2}$	$\frac{1}{2}$	$\frac{1}{2}$	$\frac{1}{2}$
Straight Strands	6	8	10	10	12	12	14	16	16
Draped Strands	2	2	2	4	4	6	6	6	8

BEAM TYPE 3, GROUP 3 (CONTINUOUS SPANS)											
GIRDER	74	75	76	77	78	79	80	81	82	83	84
Initial Prestress kips	279	341	403	465	527	589	651	713	775	837	899
Size of Strands	$\frac{1}{2}$	$\frac{1}{2}$	$\frac{1}{2}$	$\frac{1}{2}$	$\frac{1}{2}$	$\frac{1}{2}$	$\frac{1}{2}$	$\frac{1}{2}$	$\frac{1}{2}$	$\frac{1}{2}$	$\frac{1}{2}$
Straight Strands	7	9	10	12	14	15	17	18	20	22	24
Draped Strands	2	2	3	3	3	4	4	5	5	5	5

Note: For strand table used in computer program refer to Computer Manual, Program Number BR200.

Design

BEAM TYPE 4
SECTION PROPERTIES AND STRAND ARRANGEMENT (CONTINUOUS SPANS)

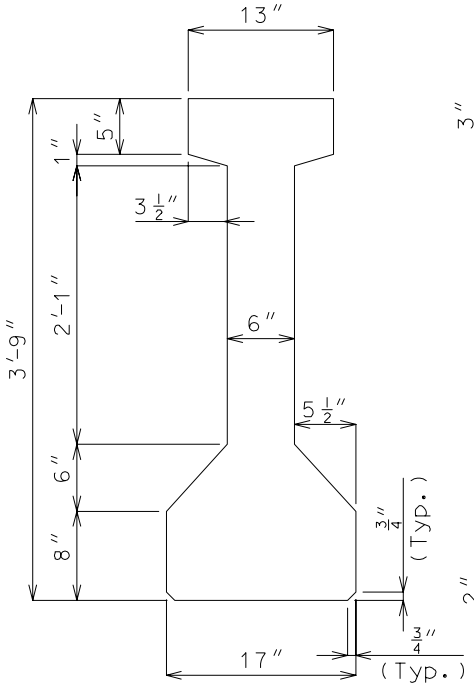

GIRDERS 4A THRU 4C
A = 428.9 SQ. IN.
Y_b= 19.54 IN.
I = 92,450 IN.^{4} (✳)

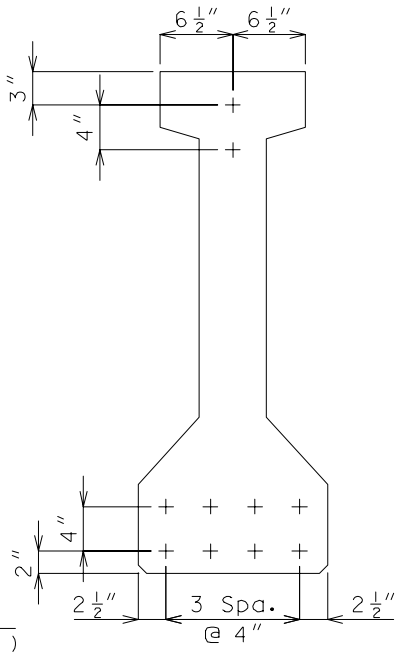

GIRDER 4A
(10 STRANDS)

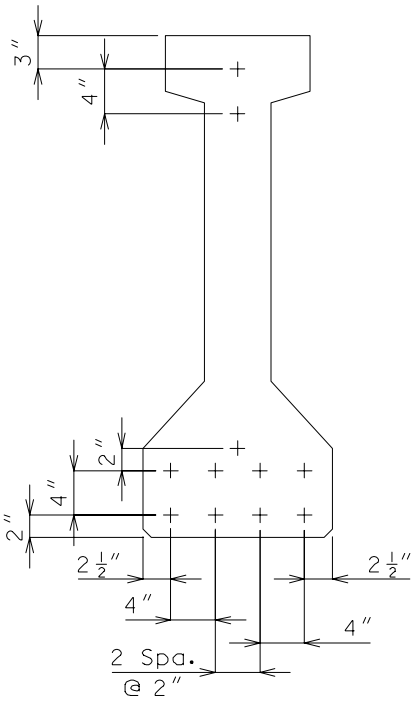

GIRDER 4B
(11 STRANDS)

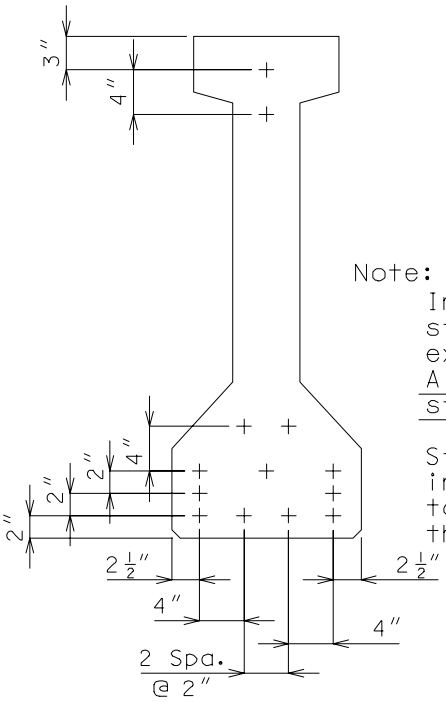

GIRDER 4C
(13 STRANDS)

GIRDER	4A	4B	4C
Initial Prestress kips	310	341	403
Size of Strands	1/2	1/2	1/2
No. of Strands (All Straight)	10	11	12
Bottom of Girder to Center of Gravity of Strands-Inches	11.20	10.91	10.31

Note:

Investigate the possibility of using all straight strands when strength check of a hold-down device exceeds allowable. (See this section sheet 1.1.13). All strand arrangements shown on this page have straight strands only.

Strand arrangements other than those shown may be investigated by the designer. For example: rearrange top strands into two vertical rows (This would aid the fabricator when placing B1 Bars).

✳ This value is used to compensate for bottom fillets not at 45° angles as assumed by BR200. (Less than 1% difference).

Design

BEAM TYPE 4, GROUP 1
SECTION PROPERTIES AND STRAND ARRANGEMENT (CONTINUOUS SPANS)

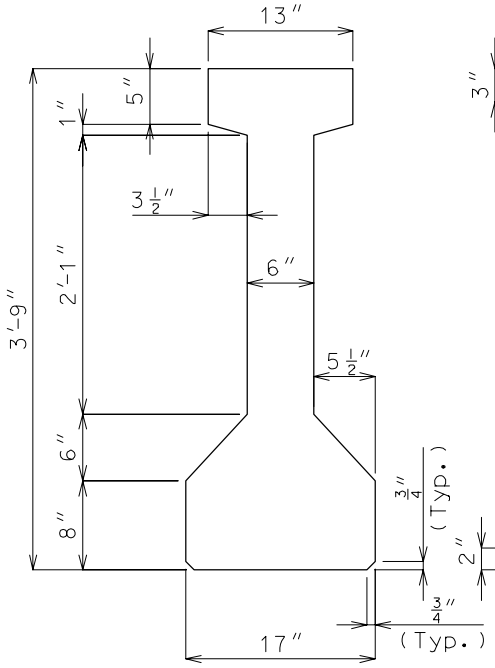

GIRDERS 86 THRU 96
A = 428.9 SQ. IN.
Y_b= 19.54 IN.
I = 92,450 IN.^{4}

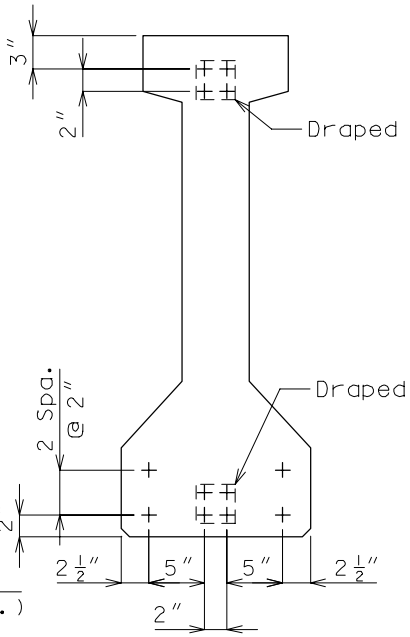

GIRDER SEQ. NO. 86
(8 STRANDS)

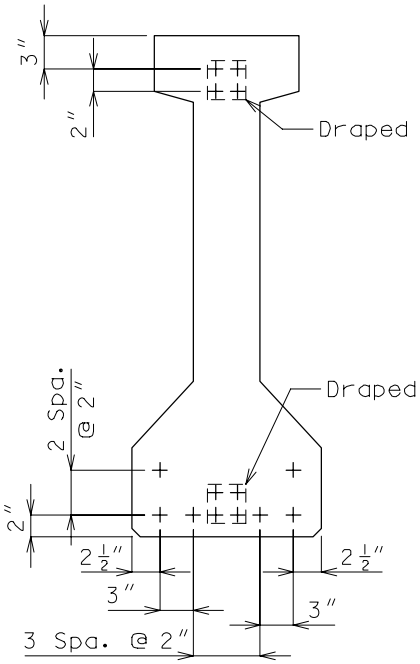

GIRDER SEQ. NO. 87
(10 STRANDS)

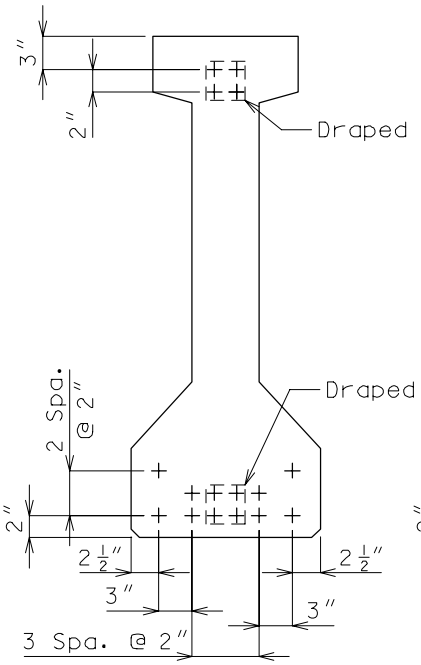

GIRDER SEQ. NO. 88
(12 STRANDS)

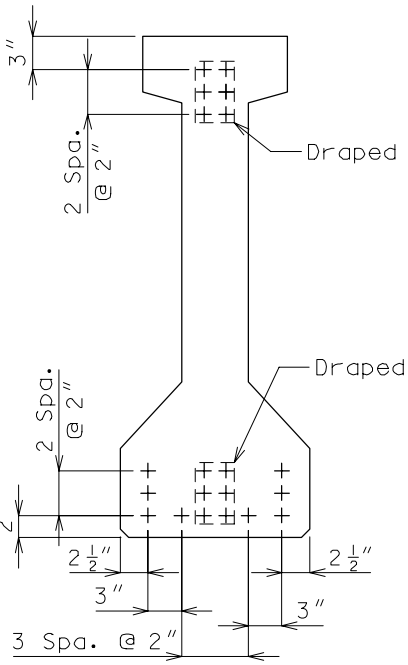

GIRDER SEQ. NO. 89
(14 STRANDS)

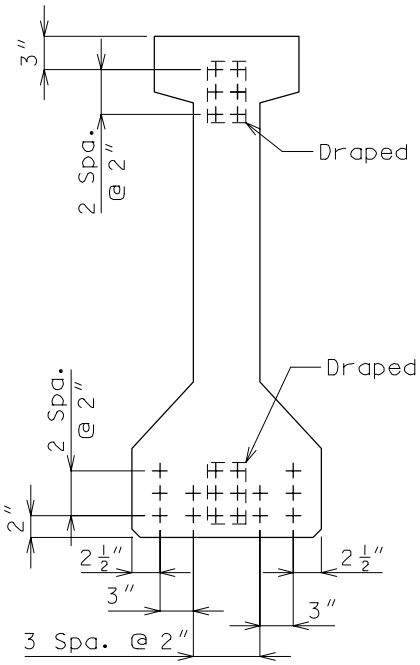

GIRDER SEQ. NO. 90
(16 STRANDS)

ATTENTION: Location of draped strands shown in top flange are at end of girder and draped strands in bottom flange are at centerline.

Design

BEAM TYPE 4, GROUP 1 (CONT.)
SECTION PROPERTIES AND STRAND ARRANGEMENT (CONTINUOUS SPANS)

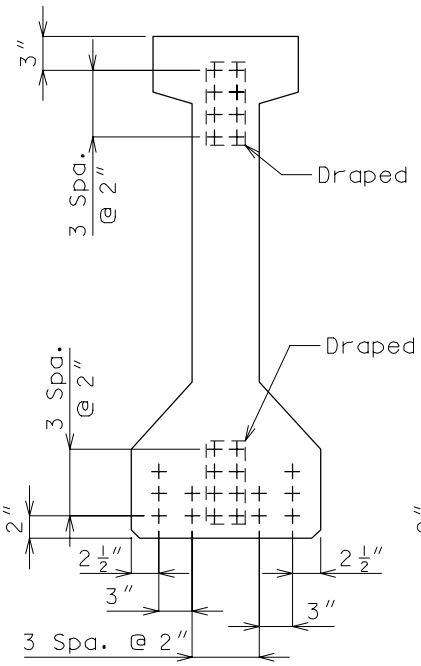

GIRDER SEQ. NO. 91
(18 STRANDS)

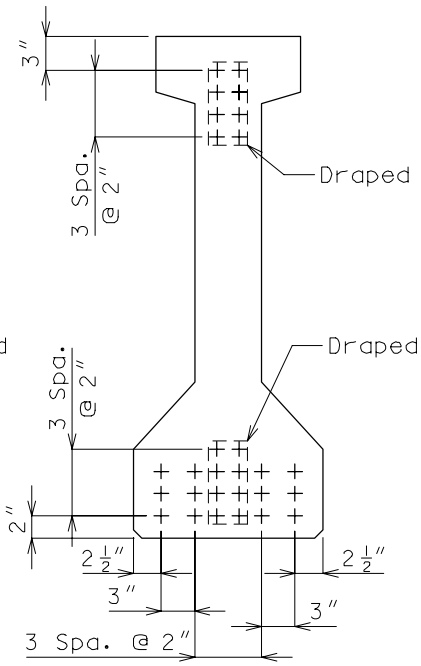

GIRDER SEQ. NO. 92
(20 STRANDS)

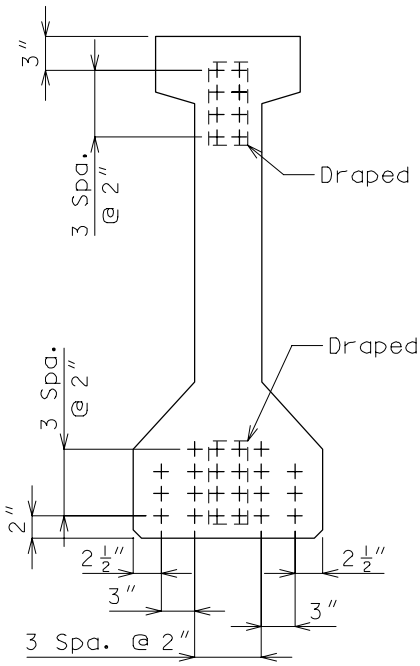

GIRDER SEQ. NO. 93
(22 STRANDS)

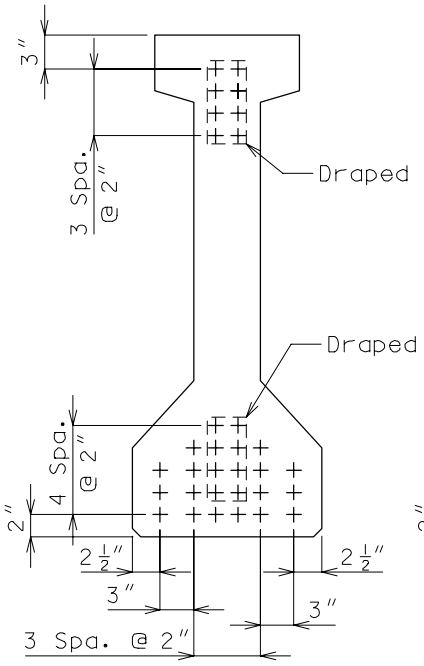

GIRDER SEQ. NO. 94
(24 STRANDS)

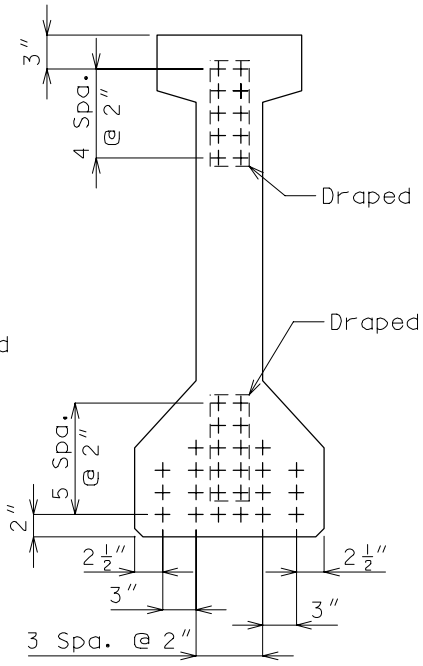

GIRDER SEQ. NO. 95
(26 STRANDS)

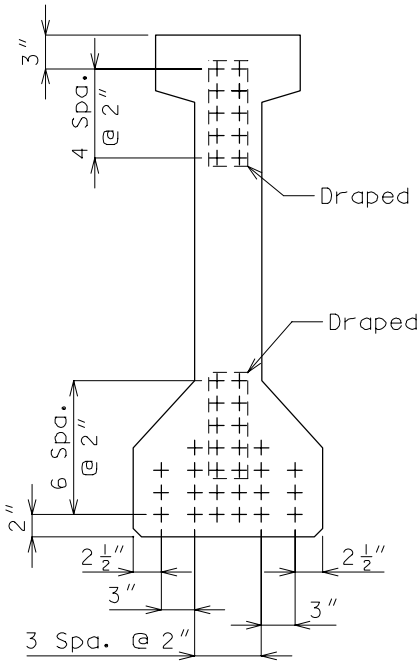

GIRDER SEQ. NO. 96
(28 STRANDS)

ATTENTION: Location of draped strands shown in top flange are at end of girder and draped strands in bottom flange are at centerline.

Design

BEAM TYPE 4, GROUP 2
SECTION PROPERTIES AND STRAND ARRANGEMENT (CONTINUOUS SPANS)

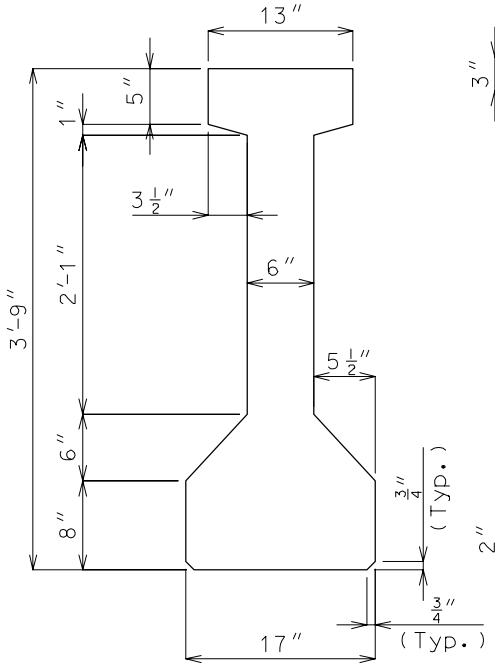

GIRDERS 101 THRU 113
A = 428.9 SQ. IN.
Y_b= 19.54 IN.
I = 92,450 IN.^{4}

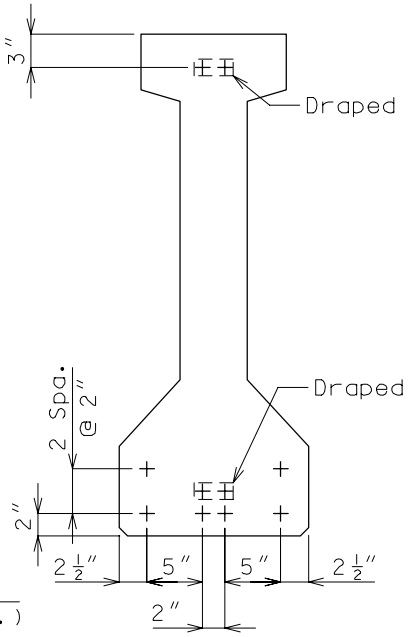

GIRDER SEQ. NO. 101
(8 STRANDS)

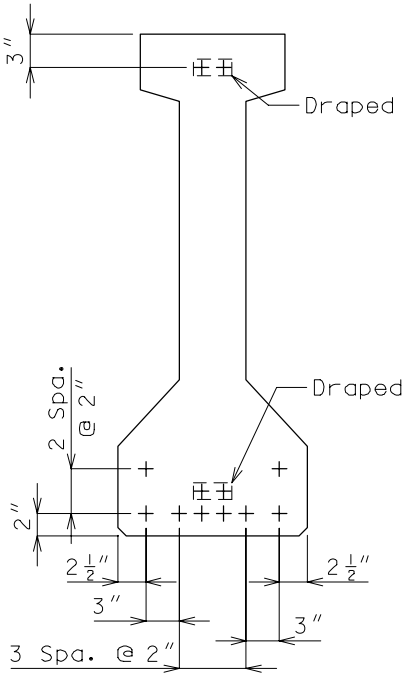

GIRDER SEQ. NO. 102
(10 STRANDS)

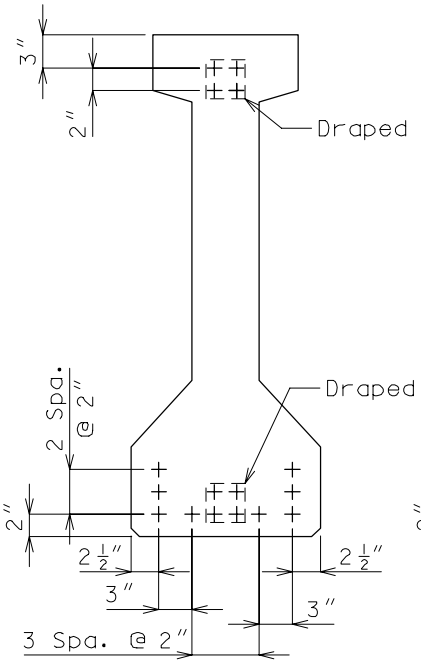

GIRDER SEQ. NO. 103
(12 STRANDS)

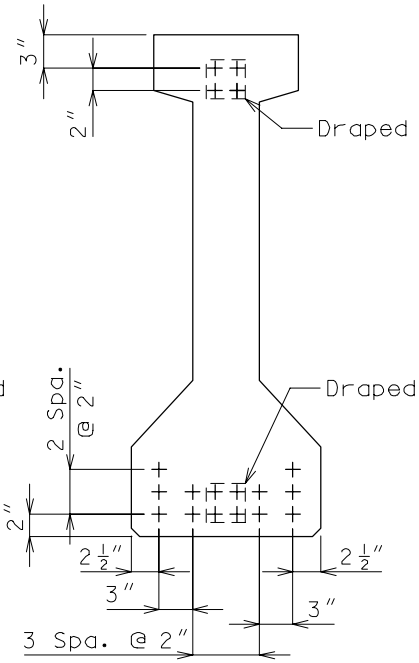

GIRDER SEQ. NO. 104
(14 STRANDS)

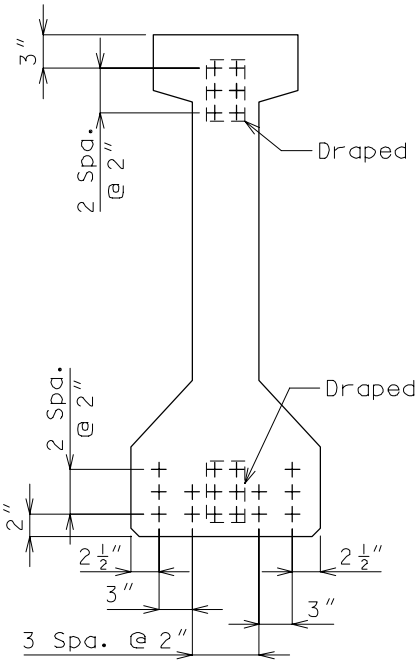

GIRDER SEQ. NO. 105
(16 STRANDS)

ATTENTION: Location of draped strands shown in top flange are at end of girder and draped strands in bottom flange are at centerline.

Design

BEAM TYPE 4, GROUP 2 (CONT.)
SECTION PROPERTIES AND STRAND ARRANGEMENT (CONTINUOUS SPANS)

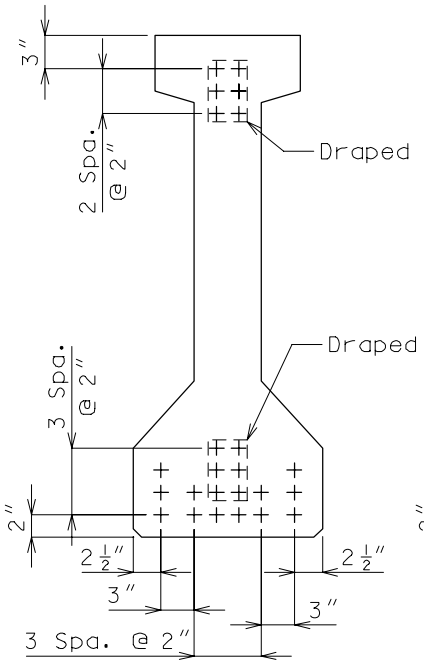

GIRDER SEQ. NO. 106
(18 STRANDS)

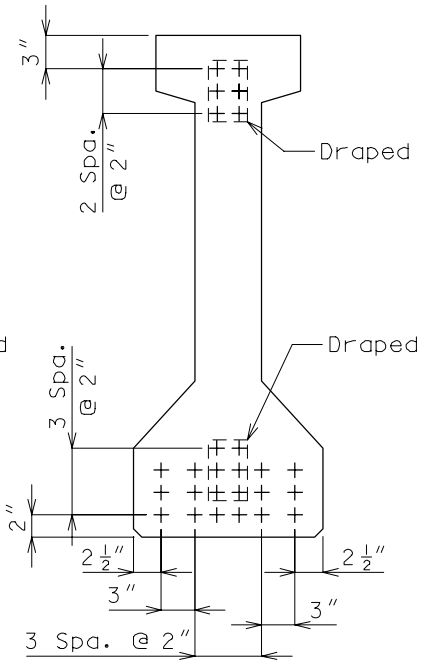

GIRDER SEQ. NO. 107
(20 STRANDS)

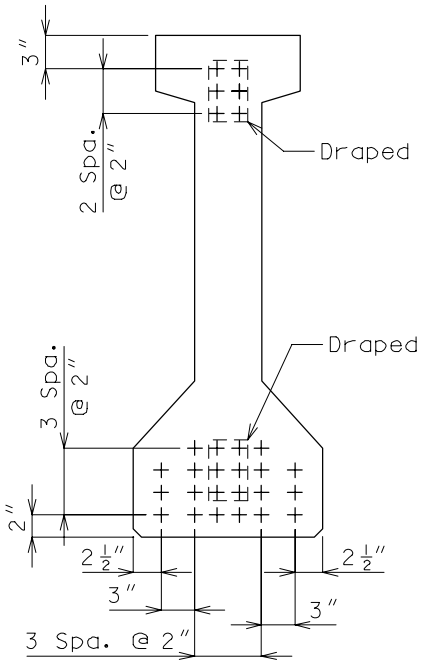

GIRDER SEQ. NO. 108
(22 STRANDS)

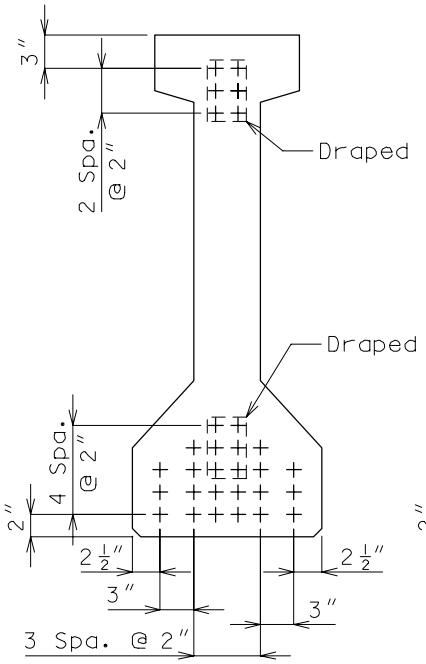

GIRDER SEQ. NO. 109
(24 STRANDS)

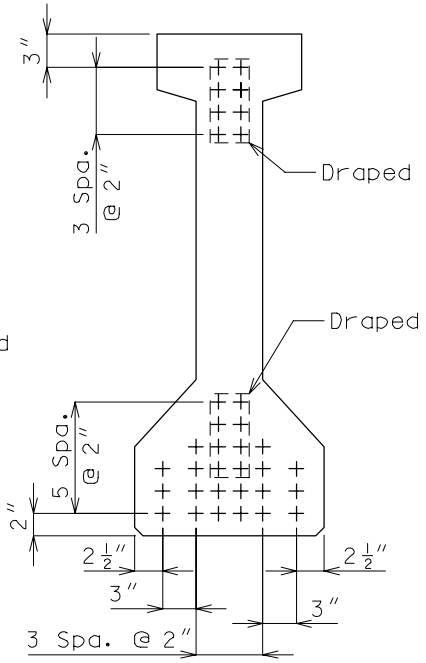

GIRDER SEQ. NO. 110
(26 STRANDS)

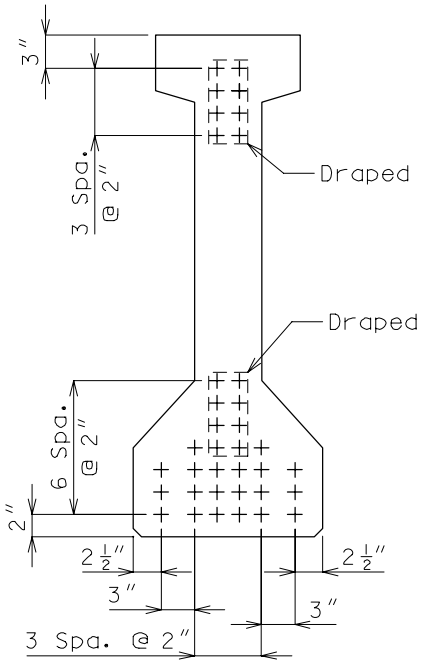

GIRDER SEQ. NO. 111
(28 STRANDS)

ATTENTION: Location of draped strands shown in top flange are at end of girder and draped strands in bottom flange are at centerline.

BEAM TYPE 4, GROUP 2 (CONT.) **Design**
SECTION PROPERTIES AND STRAND ARRANGEMENT (CONTINUOUS SPANS)

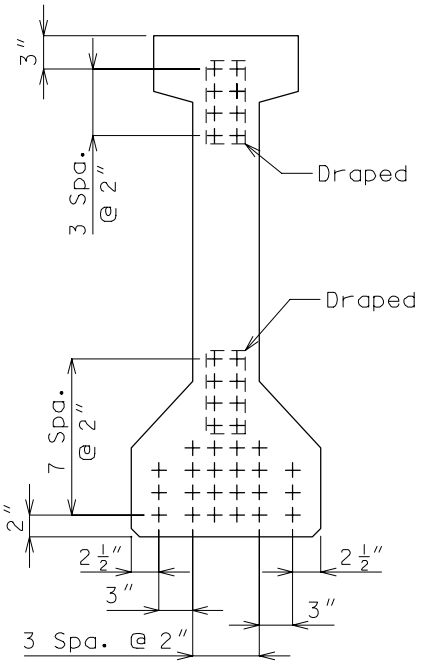

GIRDER SEQ. NO. 112
(30 STRANDS)

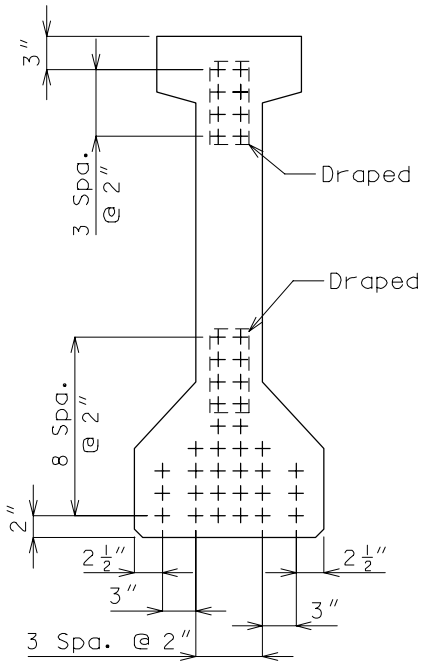

GIRDER SEQ. NO. 113
(32 STRANDS)

ATTENTION: Location of draped strands shown in top flange are at end of girder and draped strands in bottom flange are at centerline.

Design

BEAM TYPE 4, GROUP 3
SECTION PROPERTIES AND STRAND ARRANGEMENT (CONTINUOUS SPANS)

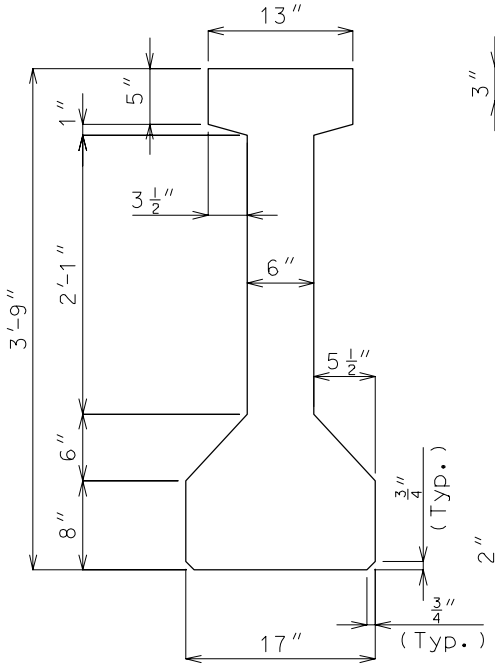

GIRDERS 115 THRU 127
A = 428.9 SQ. IN.
Y_b= 19.54 IN.
I = 92,450 IN.^{4}

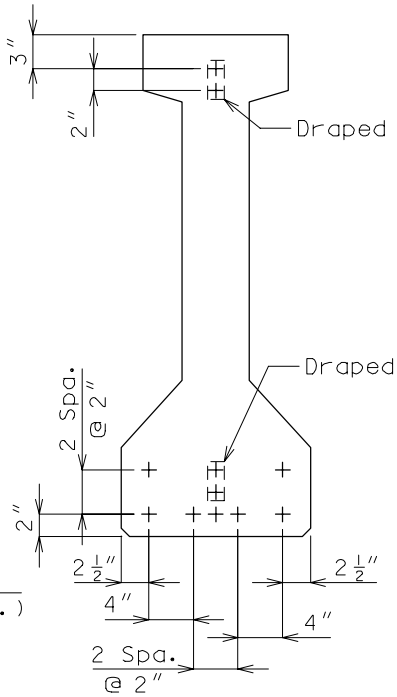

GIRDER SEQ. NO. 115
(9 STRANDS)

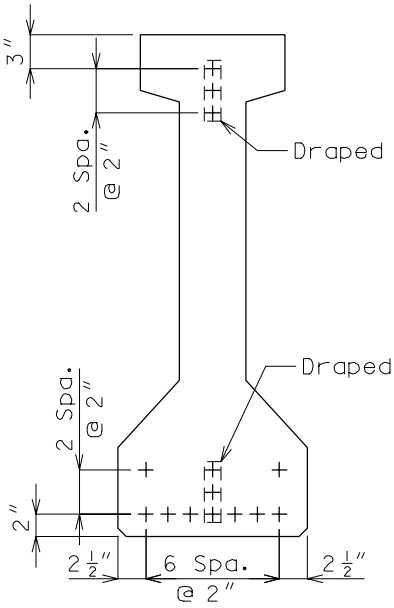

GIRDER SEQ. NO. 116
(11 STRANDS)

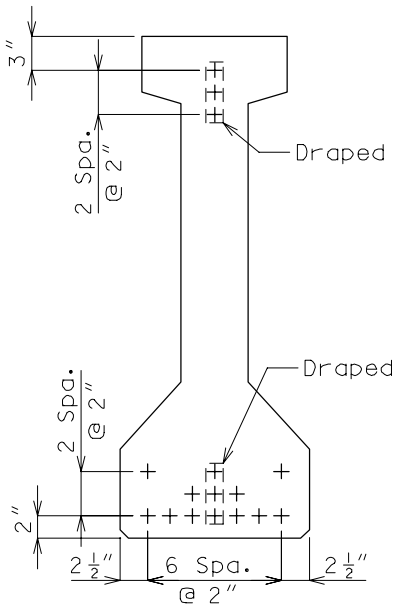

GIRDER SEQ. NO. 117
(13 STRANDS)

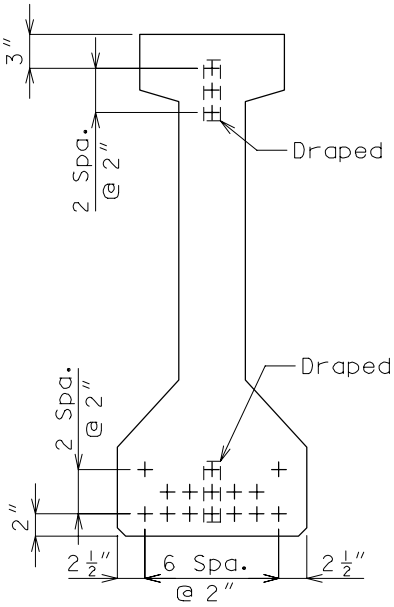

GIRDER SEQ. NO. 118
(15 STRANDS)

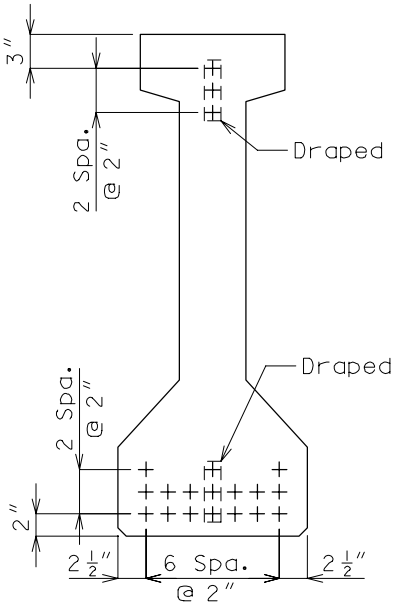

GIRDER SEQ. NO. 119
(17 STRANDS)

ATTENTION: Location of draped strands shown in top flange are at end of girder and draped strands in bottom flange are at centerline.

Design

BEAM TYPE 4, GROUP 3 (CONT.)
SECTION PROPERTIES AND STRAND ARRANGEMENT (CONTINUOUS SPANS)

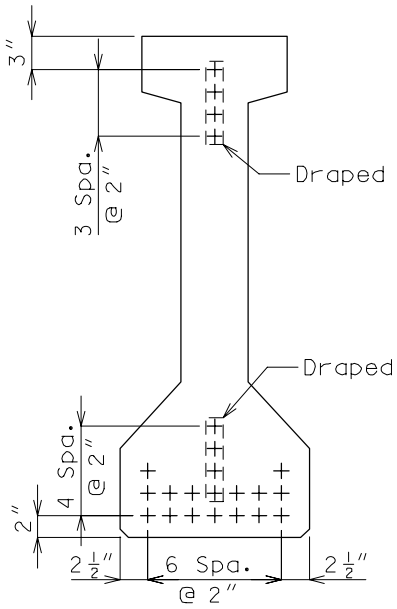

GIRDER SEQ. NO. 120
(19 STRANDS)

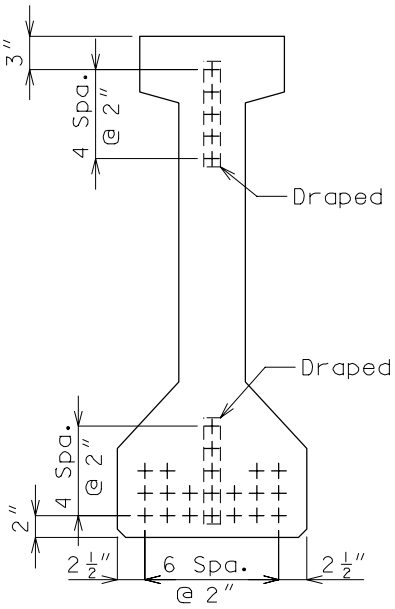

GIRDER SEQ. NO. 121
(21 STRANDS)

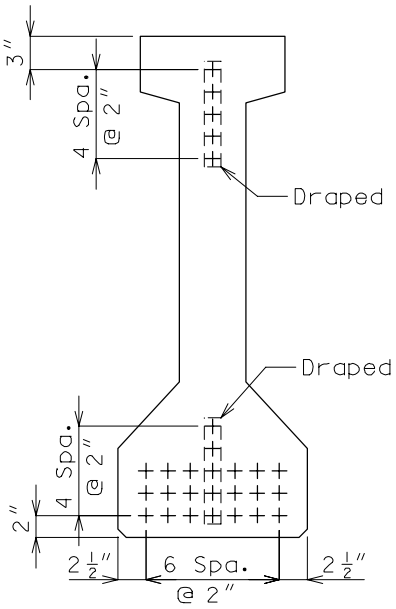

GIRDER SEQ. NO. 122
(23 STRANDS)

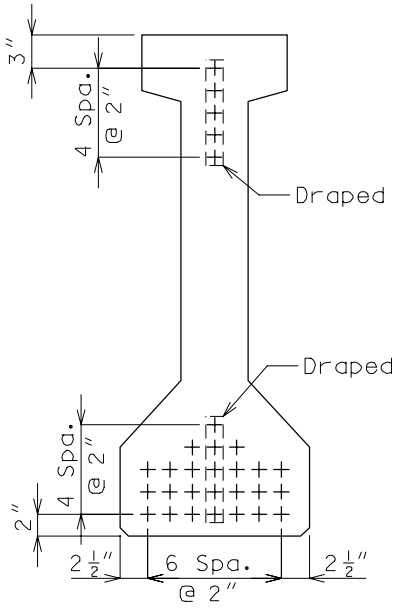

GIRDER SEQ. NO. 123
(25 STRANDS)

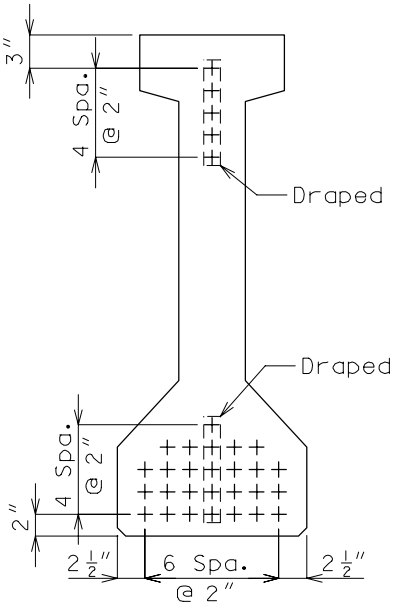

GIRDER SEQ. NO. 124
(27 STRANDS)

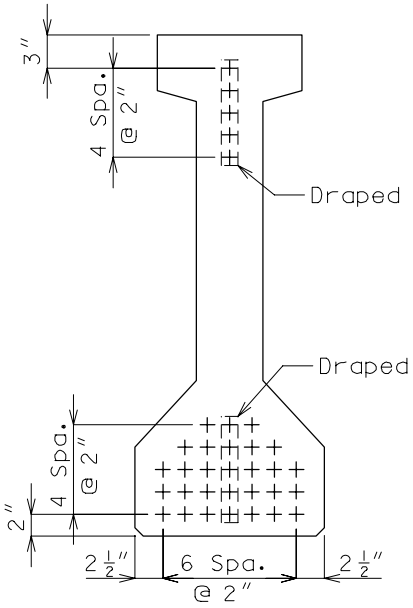

GIRDER SEQ. NO. 125
(29 STRANDS)

ATTENTION: Location of draped strands shown in top flange are at end of girder and draped strands in bottom flange are at centerline.

BEAM TYPE 4, GROUP 3 (CONT.) **Design**
SECTION PROPERTIES AND STRAND ARRANGEMENT (CONTINUOUS SPANS)

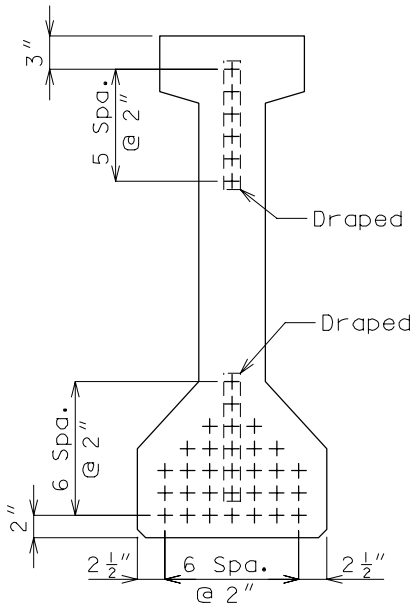

GIRDER SEQ. NO. 126
(31 STRANDS)

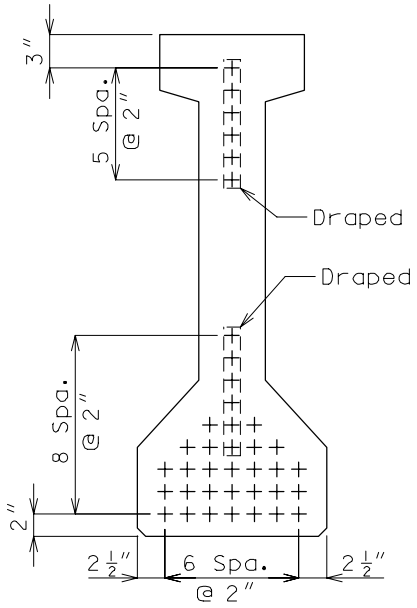

GIRDER SEQ. NO. 127
(33 STRANDS)

ATTENTION: Location of draped strands shown in top flange are at end of girder and draped strands in bottom flange are at centerline.

Design

BEAM TYPE 4
SECTION PROPERTIES AND STRAND ARRANGEMENT (CONTINUOUS SPANS)

Note: Shown in the tables are the values of initial prestress force based on 31.0 kips/strand. Check computer output for value of maximum prestress force to be placed as initial prestress force on design plans.

BEAM TYPE 4, GROUP 1 (CONTINUOUS SPANS)											
GIRDER	86	87	88	89	90	91	92	93	94	95	96
Initial Prestress kips	248	310	372	434	496	558	620	682	744	806	868
Size of Strands	$\frac{1}{2}$	$\frac{1}{2}$	$\frac{1}{2}$	$\frac{1}{2}$	$\frac{1}{2}$	$\frac{1}{2}$	$\frac{1}{2}$	$\frac{1}{2}$	$\frac{1}{2}$	$\frac{1}{2}$	$\frac{1}{2}$
Straight Strands	4	6	8	8	10	10	12	14	16	16	18
Draped Strands	4	4	4	6	6	8	8	8	8	10	10

BEAM TYPE 4, GROUP 2 (CONTINUOUS SPANS)													
GIRDER	101	102	103	104	105	106	107	108	109	110	111	112	113
Initial Prestress kips	248	310	372	434	496	558	620	682	744	806	868	930	992
Size of Strands	$\frac{1}{2}$	$\frac{1}{2}$	$\frac{1}{2}$	$\frac{1}{2}$	$\frac{1}{2}$	$\frac{1}{2}$	$\frac{1}{2}$	$\frac{1}{2}$	$\frac{1}{2}$	$\frac{1}{2}$	$\frac{1}{2}$	$\frac{1}{2}$	$\frac{1}{2}$
Straight Strands	6	8	8	10	10	12	14	16	18	18	20	22	24
Draped Strands	2	2	4	4	6	6	6	6	6	8	8	8	8

BEAM TYPE 4, GROUP 3 (CONTINUOUS SPANS)													
GIRDER	115	116	117	118	119	120	121	122	123	124	125	126	127
Initial Prestress kips	279	341	403	465	527	589	651	713	775	837	899	961	1023
Size of Strands	$\frac{1}{2}$	$\frac{1}{2}$	$\frac{1}{2}$	$\frac{1}{2}$	$\frac{1}{2}$	$\frac{1}{2}$	$\frac{1}{2}$	$\frac{1}{2}$	$\frac{1}{2}$	$\frac{1}{2}$	$\frac{1}{2}$	$\frac{1}{2}$	$\frac{1}{2}$
Straight Strands	7	8	10	12	14	15	16	18	20	22	24	25	27
Draped Strands	2	3	3	3	3	4	5	5	5	5	5	6	6

Note: For strand table used in computer program refer to Computer Manual, Program Number BR200.

Design

BEAM TYPE 2, GROUP 1
SECTION PROPERTIES AND STRAND ARRANGEMENT (SIMPLE SPANS)

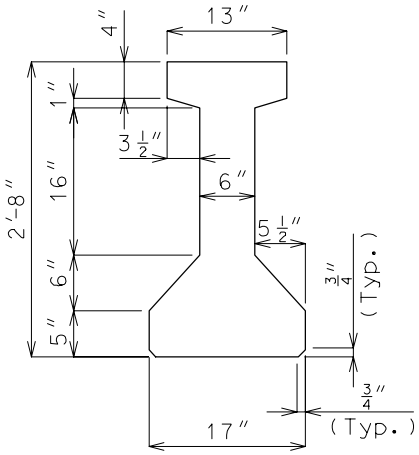

GIRDERS 12 THRU 18
A = 310.9 SQ. IN.
Y_b = 14.08 IN.
I = 33,974 IN.^{4}

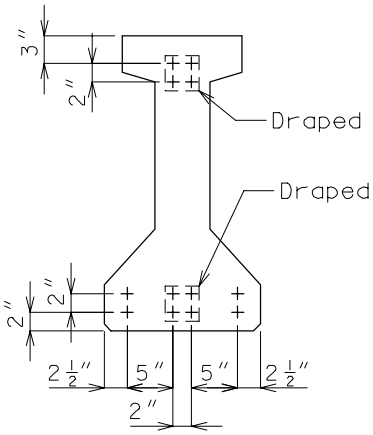

GIRDER SEQ. NO. 12
(8 STRANDS)

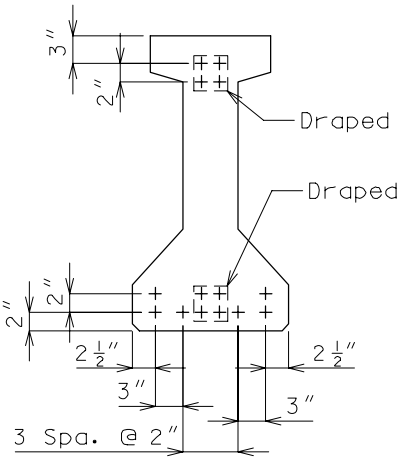

GIRDER SEQ. NO. 13
(10 STRANDS)

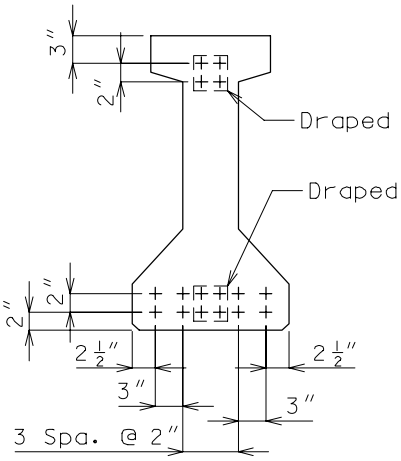

GIRDER SEQ. NO. 14
(12 STRANDS)

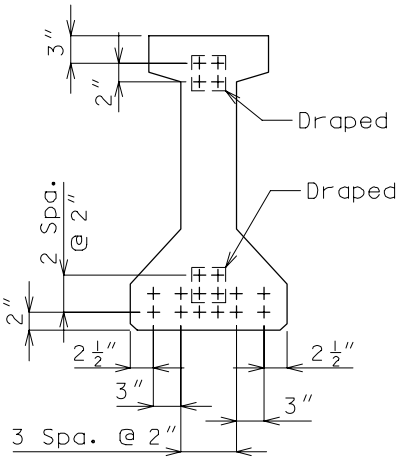

GIRDER SEQ. NO. 15
(14 STRANDS)

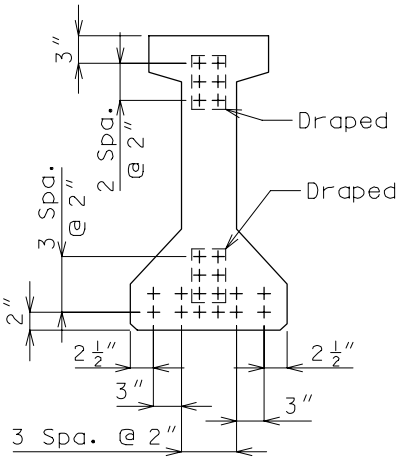

GIRDER SEQ. NO. 16
(16 STRANDS)

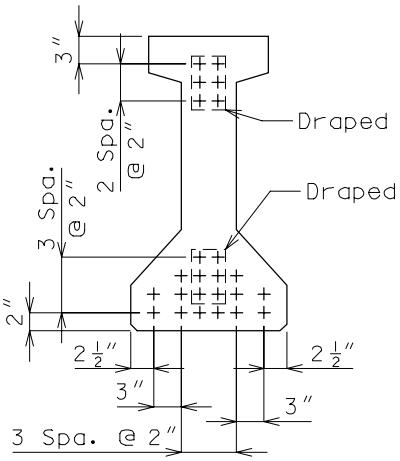

GIRDER SEQ. NO. 17
(18 STRANDS)

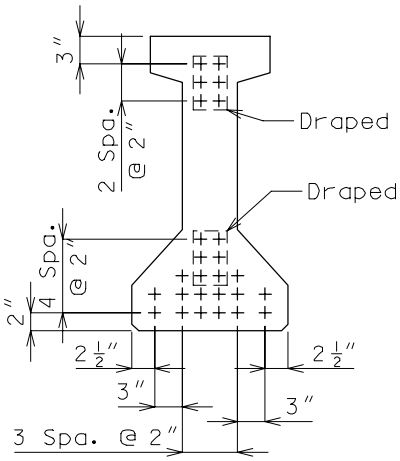

GIRDER SEQ. NO. 18
(20 STRANDS)

ATTENTION: Location of draped strands shown in top flange are at end of girder and draped strands in bottom flange are at centerline.

Design

BEAM TYPE 2, GROUP 2
SECTION PROPERTIES AND STRAND ARRANGEMENT (SIMPLE SPAN)

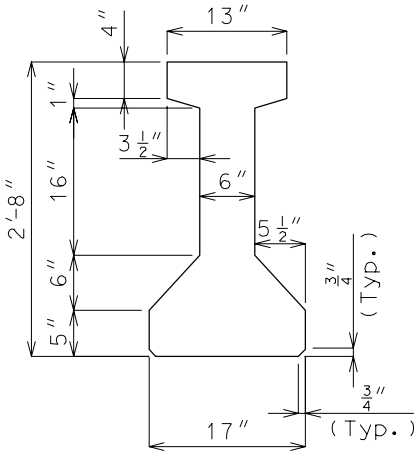

GIRDERS 19 THRU 25
A = 310.9 SQ. IN.
Y_b = 14.08 IN.
I = 33,974 IN.^{4}

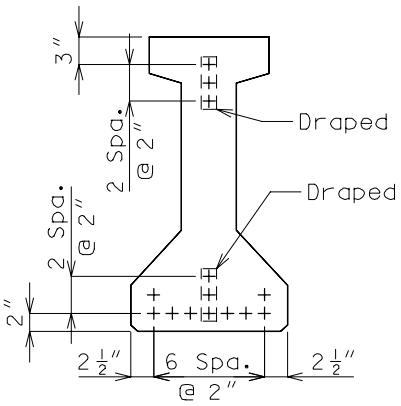

GIRDER SEQ. NO. 19
(11 STRANDS)

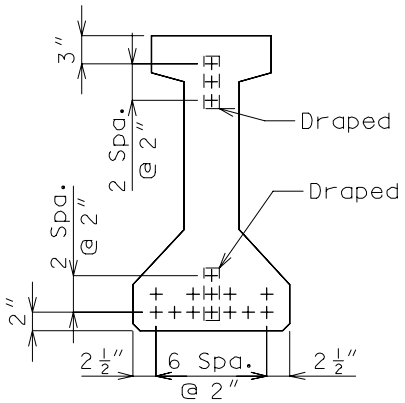

GIRDER SEQ. NO. 20
(13 STRANDS)

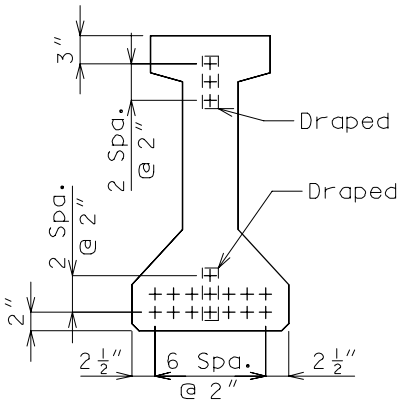

GIRDER SEQ. NO. 21
(15 STRANDS)

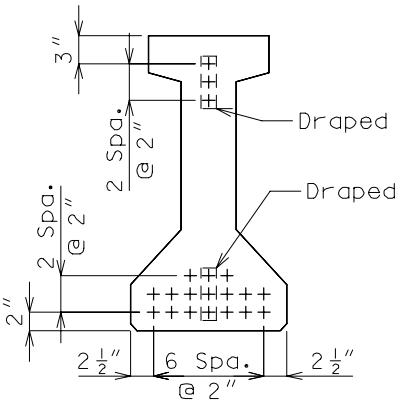

GIRDER SEQ. NO. 22
(17 STRANDS)

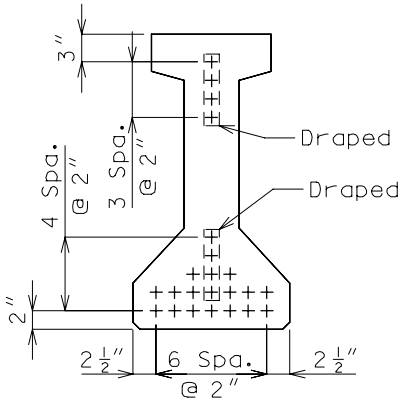

GIRDER SEQ. NO. 23
(19 STRANDS)

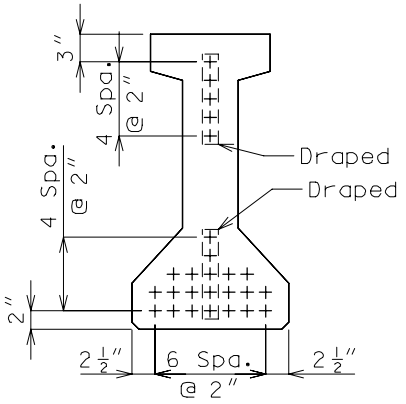

GIRDER SEQ. NO. 24
(21 STRANDS)

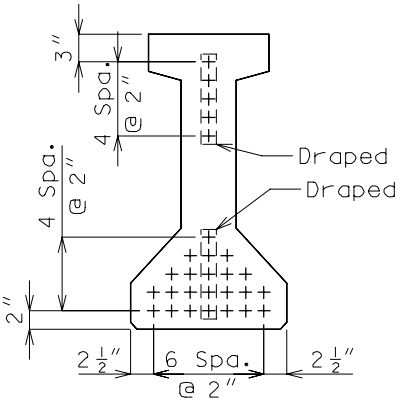

GIRDER SEQ. NO. 25
(23 STRANDS)

ATTENTION: Location of draped strands shown in top flange are at end of girder and draped strands in bottom flange are at centerline.

BEAM TYPE 2 **Design**

SECTION PROPERTIES AND STRAND ARRANGEMENT (SIMPLE SPAN)

Note: Shown in the tables are the values of initial prestress force based on 31.0 kips/strand. Check computer output for value of maximum prestress force to be placed as initial prestress force on design plans.

BEAM TYPE 2, GROUP 1 (SIMPLE SPAN)							
GIRDER	12	13	14	15	16	17	18
Initial Prestress kips	248	310	372	434	496	558	620
Size of Strands	$\frac{1}{2}$	$\frac{1}{2}$	$\frac{1}{2}$	$\frac{1}{2}$	$\frac{1}{2}$	$\frac{1}{2}$	$\frac{1}{2}$
Straight Strands	4	6	8	10	10	12	14
Draped Strands	4	4	4	4	6	6	6

BEAM TYPE 2, GROUP 2 (SIMPLE SPAN)							
GIRDER	19	20	21	22	23	24	25
Initial Prestress kips	341	403	465	527	589	651	713
Size of Strands	$\frac{1}{2}$	$\frac{1}{2}$	$\frac{1}{2}$	$\frac{1}{2}$	$\frac{1}{2}$	$\frac{1}{2}$	$\frac{1}{2}$
Straight Strands	8	10	12	14	15	16	18
Draped Strands	3	3	3	3	4	5	5

Note: For strand table used in computer program refer to Computer Manual, Program Number BR204.

Design

BEAM TYPE 3, GROUP 1
SECTION PROPERTIES AND STRAND ARRANGEMENT (SIMPLE SPAN)

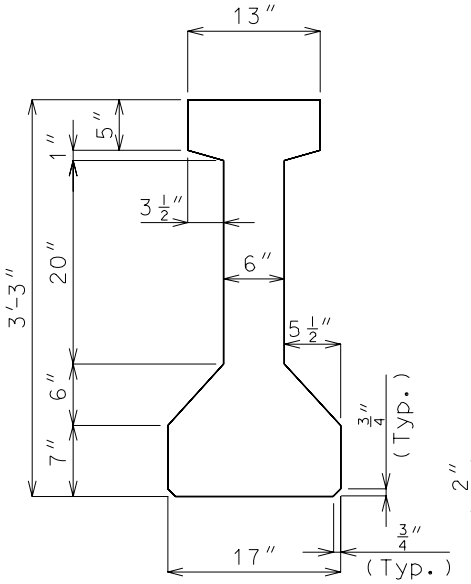

GIRDERS 26 THRU 34
A = 381.9 SQ. IN.
Y_b = 17.08 IN.
I = 61,841 IN.^{4}

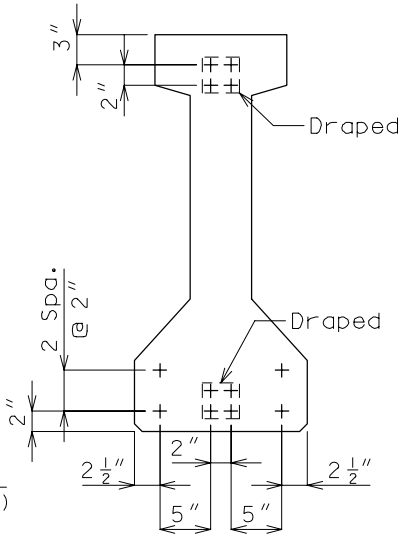

GIRDER SEQ. NO. 26
(8 STRANDS)

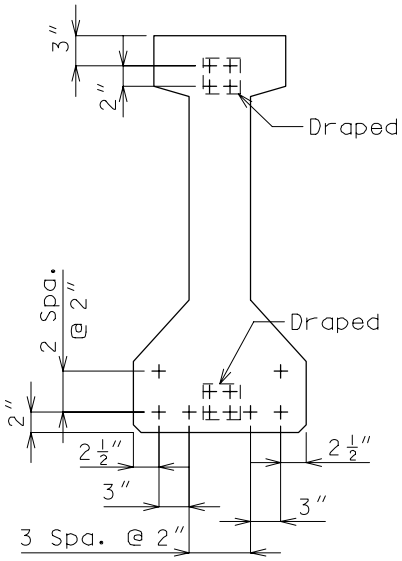

GIRDER SEQ. NO. 27
(10 STRANDS)

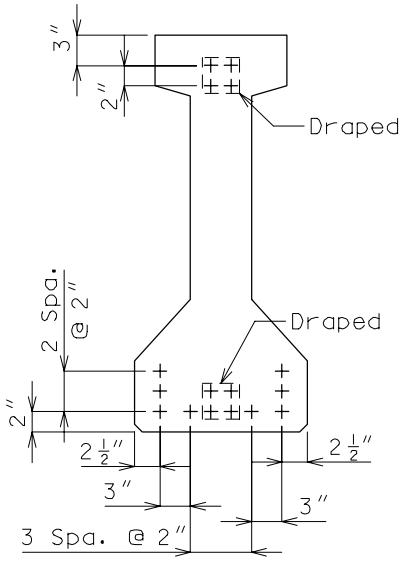

GIRDER SEQ. NO. 28
(12 STRANDS)

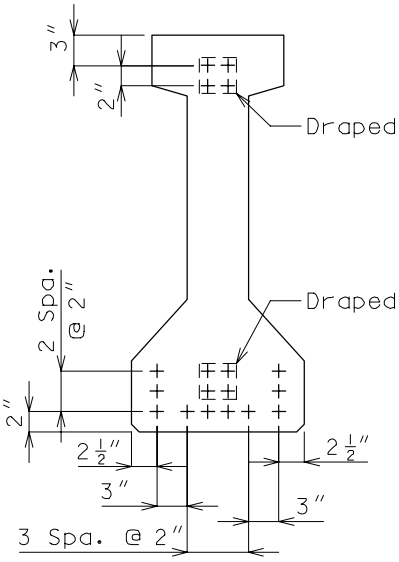

GIRDER SEQ. NO. 29
(14 STRANDS)

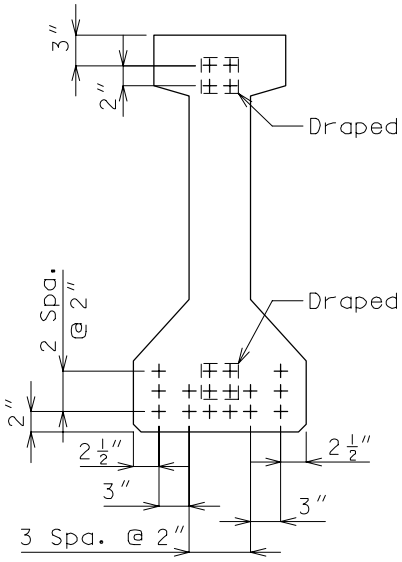

GIRDER SEQ. NO. 30
(16 STRANDS)

ATTENTION: Location of draped strands shown in top flange are at end of girder and draped strands in bottom flange are at centerline.

Design

BEAM TYPE 3, GROUP 1 (CONT.)
SECTION PROPERTIES AND STRAND ARRANGEMENT (SIMPLE SPAN)

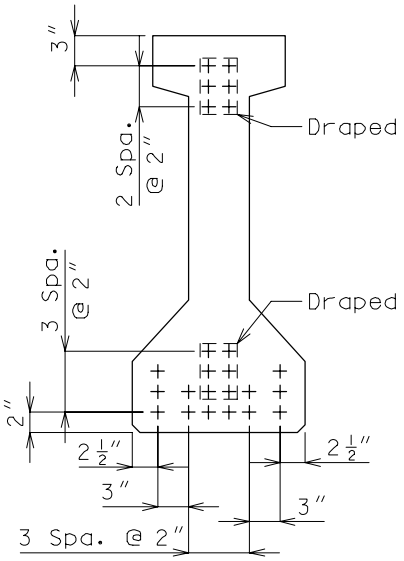

GIRDER SEQ. NO. 31
(18 STRANDS)

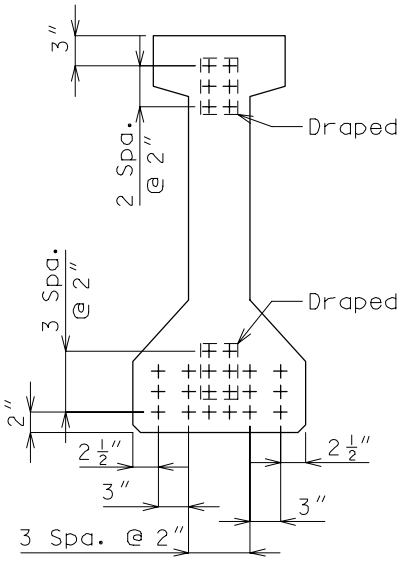

GIRDER SEQ. NO. 32
(20 STRANDS)

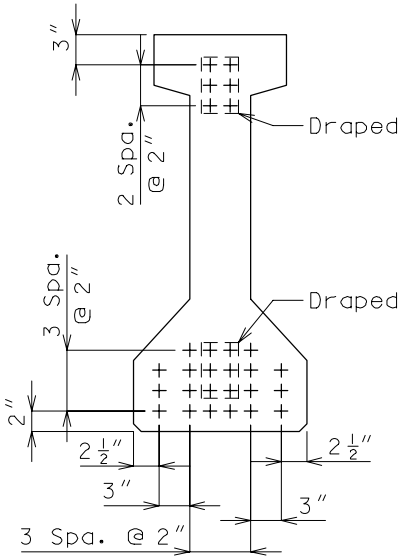

GIRDER SEQ. NO. 33
(22 STRANDS)

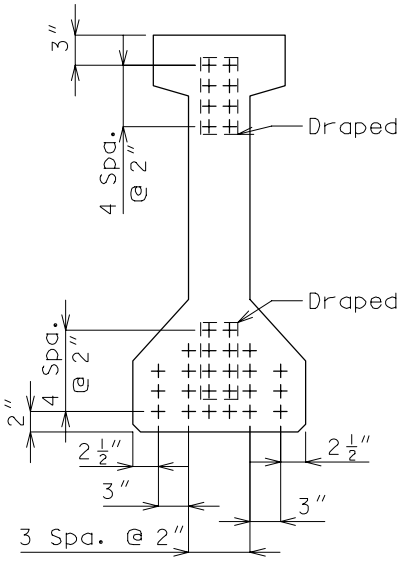

GIRDER SEQ. NO. 34
(24 STRANDS)

ATTENTION: Location of draped strands shown in top flange are at end of girder and draped strands in bottom flange are at centerline.

Design

BEAM TYPE 3, GROUP 2
SECTION PROPERTIES AND STRAND ARRANGEMENT (SIMPLE SPAN)

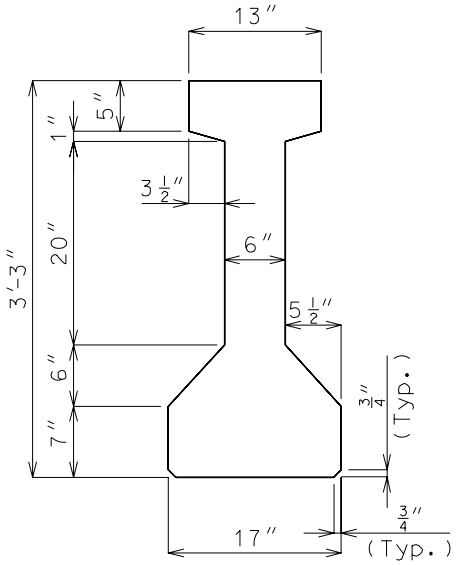

GIRDERS 35 THRU 40
A = 381.9 SQ. IN.
Y_b= 17.08 IN.
I = 61,841 IN.^{4}

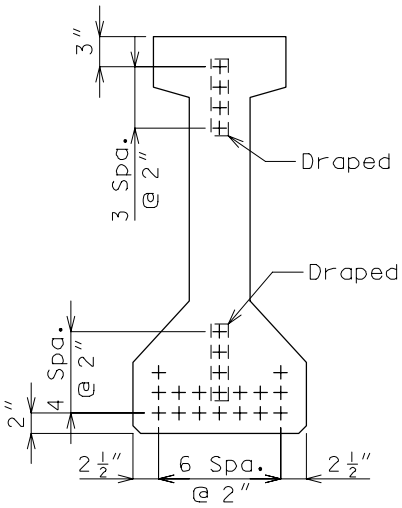

GIRDER SEQ. NO. 35
(19 STRANDS)

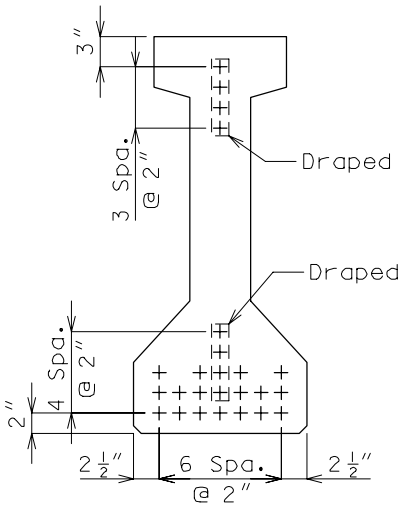

GIRDER SEQ. NO. 36
(21 STRANDS)

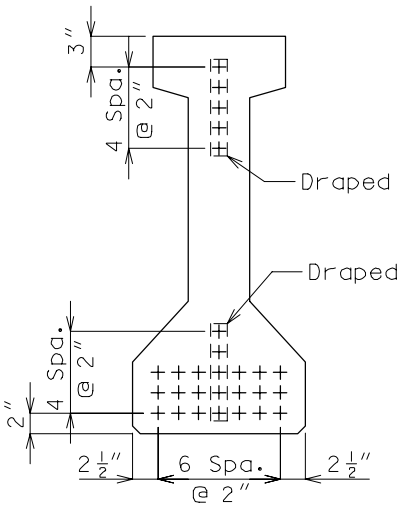

GIRDER SEQ. NO. 37
(23 STRANDS)

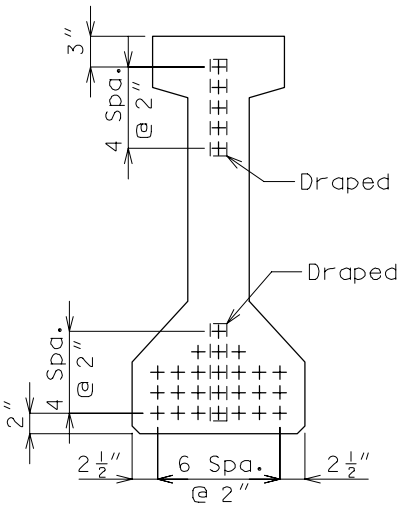

GIRDER SEQ. NO. 38
(25 STRANDS)

ATTENTION: Location of draped strands shown in top flange are at end of girder and draped strands in bottom flange are at centerline.

BEAM TYPE 3, GROUP 2 (CONT.)
SECTION PROPERTIES AND STRAND ARRANGEMENT (SIMPLE SPAN)

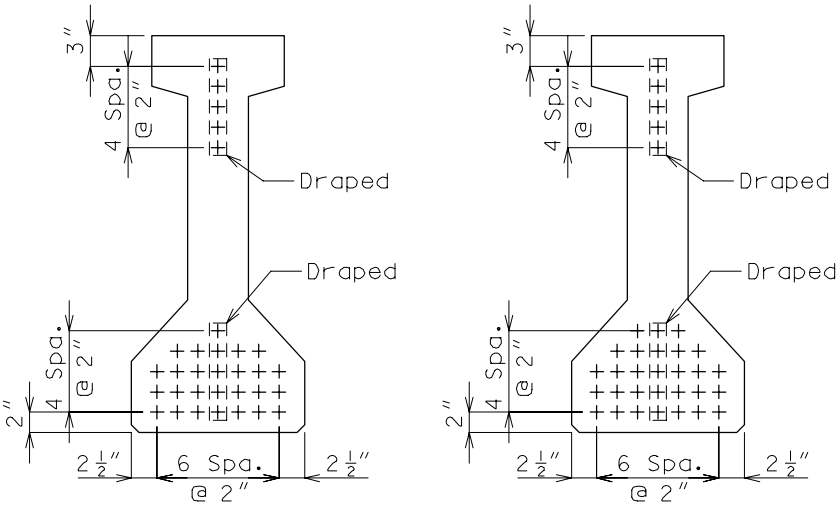

GIRDER SEQ. NO. 39
(27 STRANDS)

GIRDER SEQ. NO. 40
(29 STRANDS)

ATTENTION: Location of draped strands shown in top flange are at end of girder and draped strands in bottom flange are at centerline.

BEAM TYPE 3
SECTION PROPERTIES AND STRAND ARRANGEMENT (SIMPLE SPAN)

Note: Shown in the tables are the values of initial prestress force based on 31.0 kips/strand. Check computer output for value of maximum prestress force to be placed as initial prestress force on design plans.

BEAM TYPE 3, GROUP 1 (SIMPLE SPAN)									
GIRDER	26	27	28	29	30	31	32	33	34
Initial Prestress kips	248	310	372	434	496	558	620	682	744
Size of Strands	$\frac{1}{2}$	$\frac{1}{2}$	$\frac{1}{2}$	$\frac{1}{2}$	$\frac{1}{2}$	$\frac{1}{2}$	$\frac{1}{2}$	$\frac{1}{2}$	$\frac{1}{2}$
Straight Strands	4	6	8	10	12	12	14	16	16
Draped Strands	4	4	4	4	4	6	6	6	8

BEAM TYPE 3, GROUP 2 (SIMPLE SPAN)						
GIRDER	35	36	37	38	39	40
Initial Prestress kips	589	651	713	775	837	899
Size of Strands	$\frac{1}{2}$	$\frac{1}{2}$	$\frac{1}{2}$	$\frac{1}{2}$	$\frac{1}{2}$	$\frac{1}{2}$
Straight Strands	15	17	18	20	22	24
Draped Strands	4	4	5	5	5	5

Note: For strand table used in computer program refer to Computer Manual, Program Number BR204.

Design

BEAM TYPE 4, GROUP 1
SECTION PROPERTIES AND STRAND ARRANGEMENT (SIMPLE SPAN)

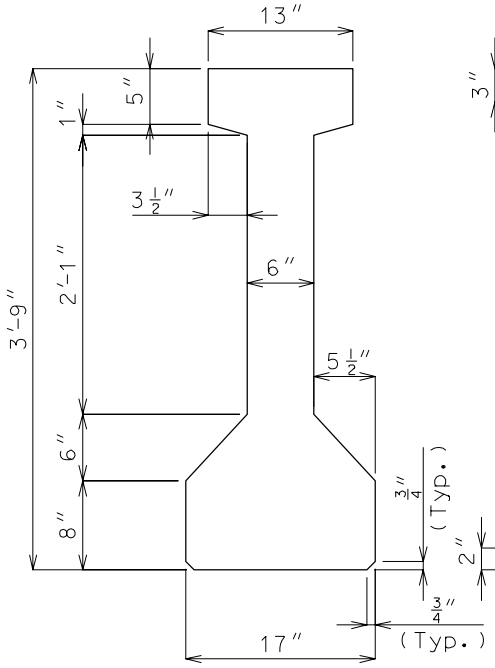

GIRDERS 41 THRU 56
A = 428.9 SQ. IN.
Y_b= 19.54 IN.
I = 92,450 IN.^{4}

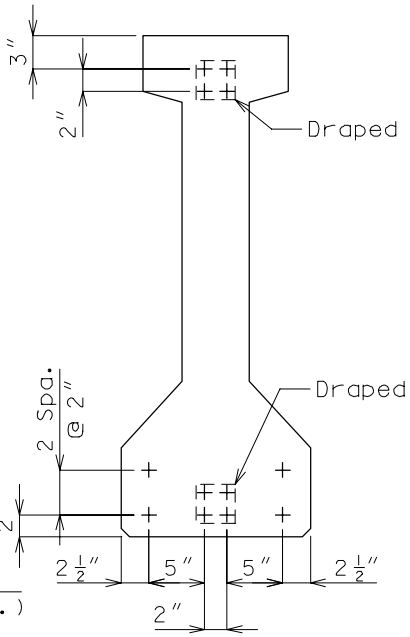

GIRDER SEQ. NO. 41
(8 STRANDS)

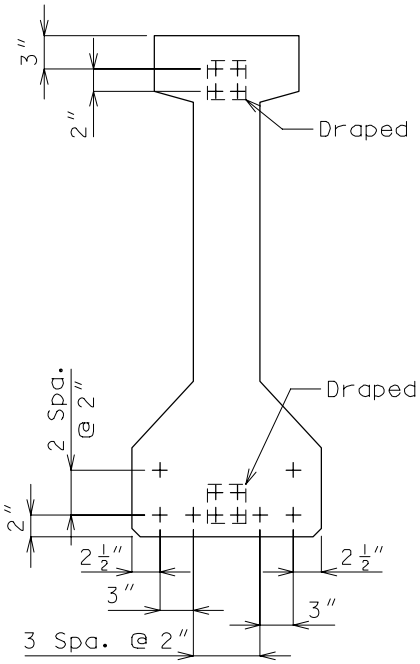

GIRDER SEQ. NO. 42
(10 STRANDS)

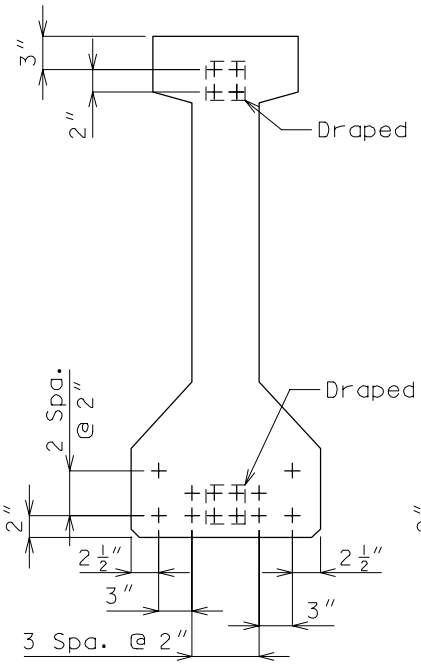

GIRDER SEQ. NO. 43
(12 STRANDS)

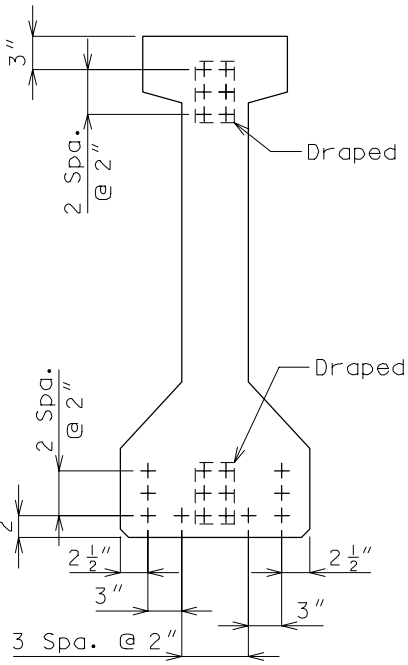

GIRDER SEQ. NO. 44
(14 STRANDS)

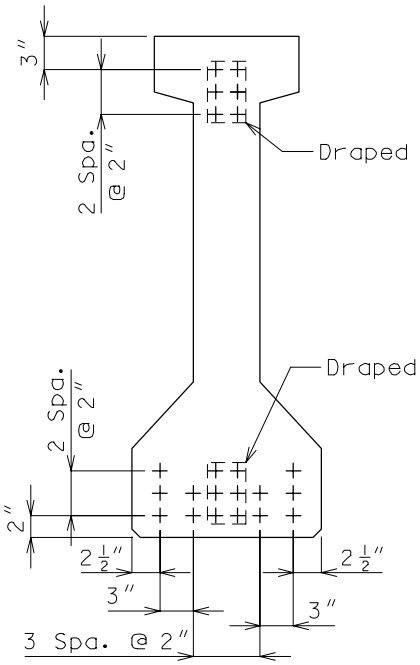

GIRDER SEQ. NO. 45
(16 STRANDS)

ATTENTION: Location of draped strands shown in top flange are at end of girder and draped strands in bottom flange are at centerline.

Design

BEAM TYPE 4, GROUP 1 (CONT.)
SECTION PROPERTIES AND STRAND ARRANGEMENT (SIMPLE SPAN)

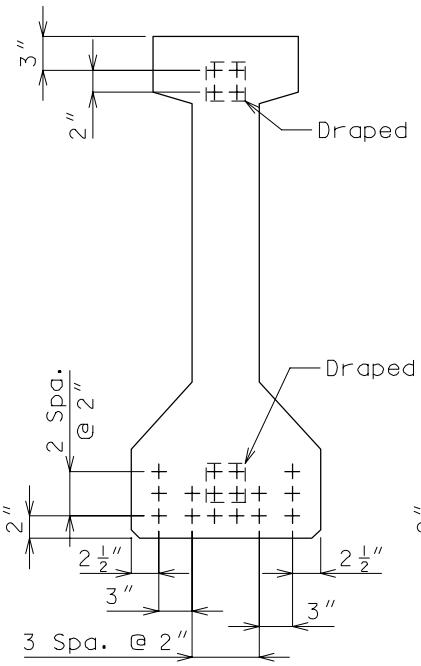

GIRDER SEQ. NO. 46
(16 STRANDS)

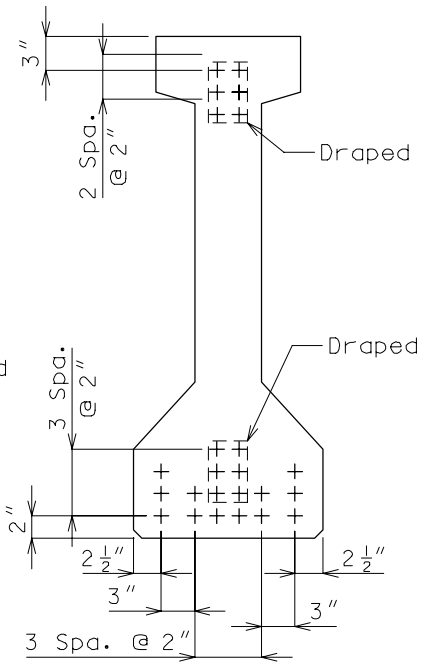

GIRDER SEQ. NO. 47
(18 STRANDS)

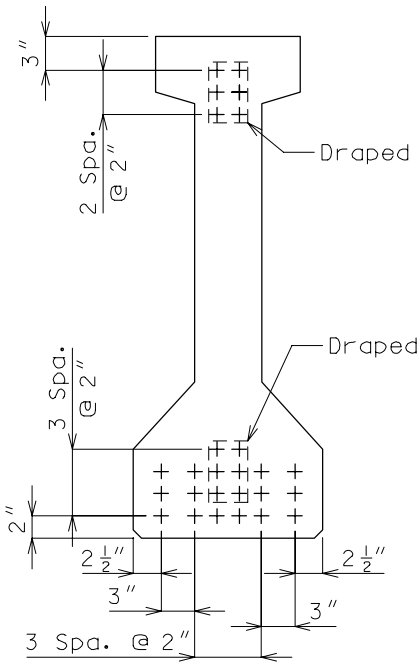

GIRDER SEQ. NO. 48
(20 STRANDS)

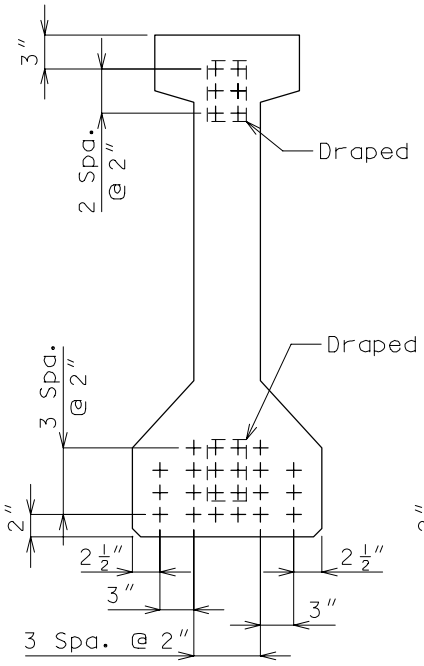

GIRDER SEQ. NO. 49
(22 STRANDS)

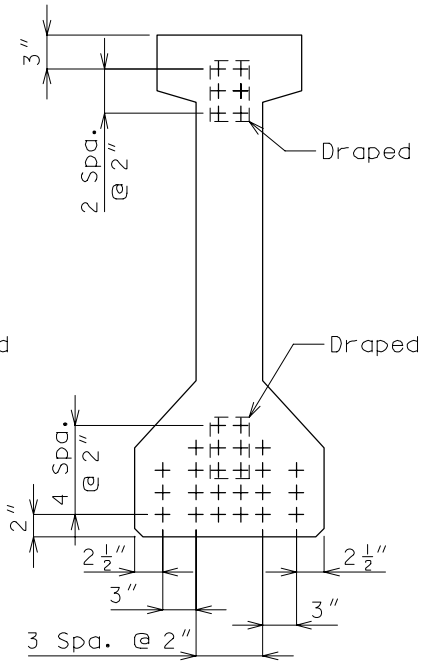

GIRDER SEQ. NO. 50
(24 STRANDS)

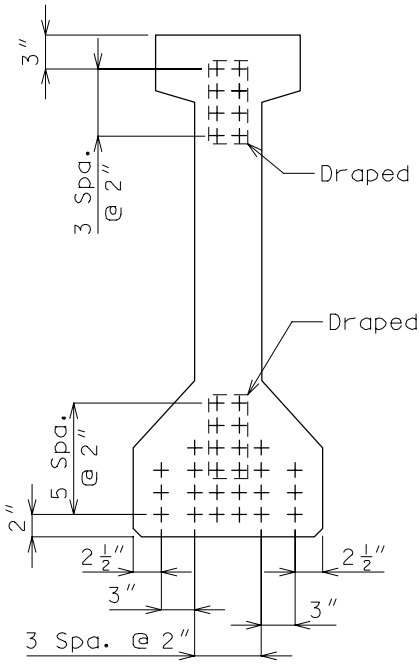

GIRDER SEQ. NO. 51
(26 STRANDS)

ATTENTION: Location of draped strands shown in top flange are at end of girder and draped strands in bottom flange are at centerline.

Design

BEAM TYPE 4, GROUP 1 (CONT.)
SECTION PROPERTIES AND STRAND ARRANGEMENT (SIMPLE SPAN)

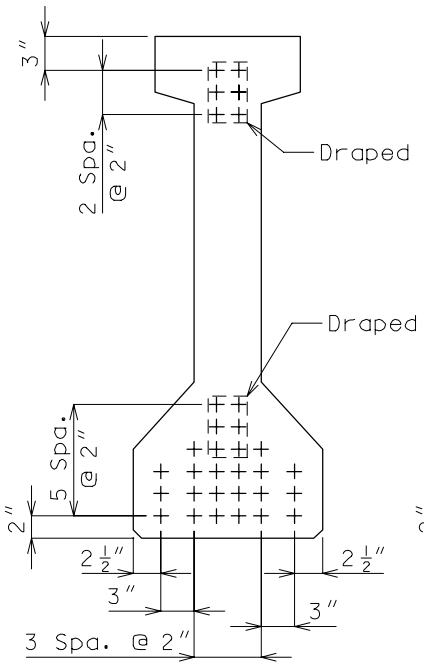

GIRDER SEQ. NO. 52
(26 STRANDS)

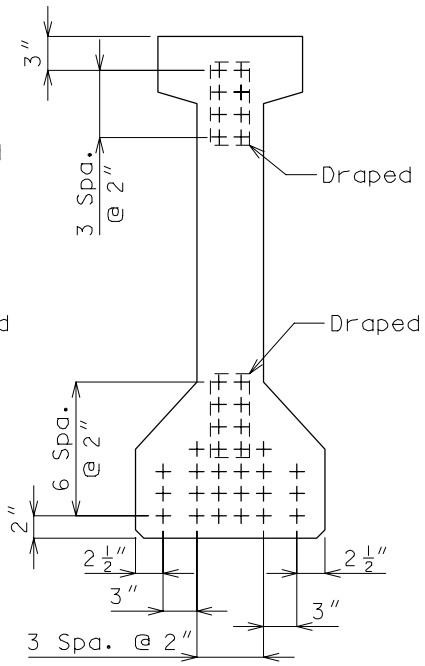

GIRDER SEQ. NO. 53
(28 STRANDS)

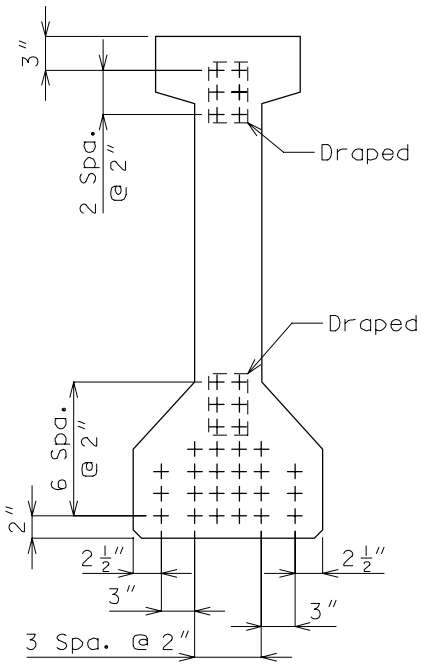

GIRDER SEQ. NO. 54
(28 STRANDS)

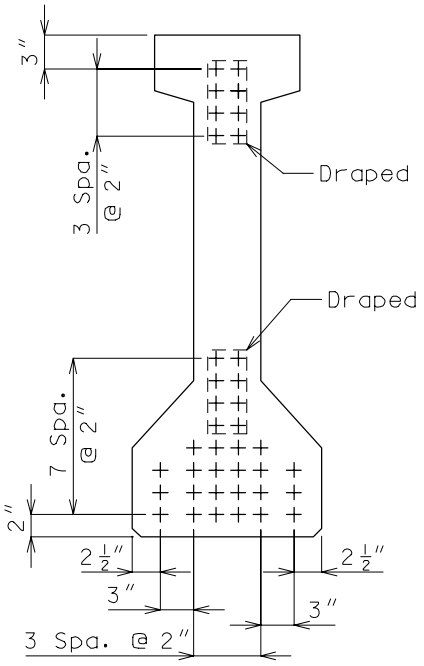

GIRDER SEQ. NO. 55
(30 STRANDS)

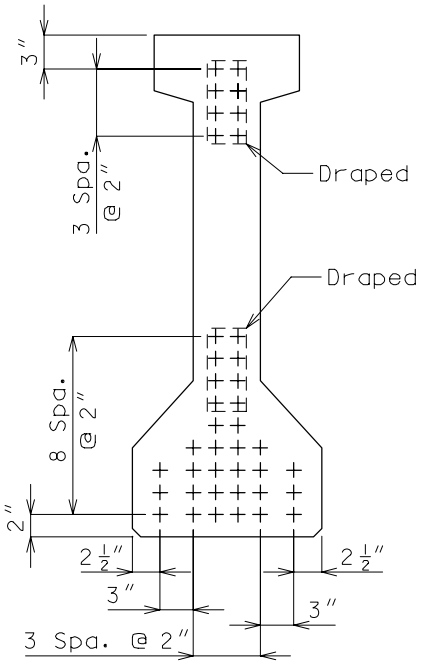

GIRDER SEQ. NO. 56
(32 STRANDS)

ATTENTION: Location of draped strands shown in top flange are at end of girder and draped strands in bottom flange are at centerline.

Design

BEAM TYPE 4, GROUP 2
SECTION PROPERTIES AND STRAND ARRANGEMENT (SIMPLE SPAN)

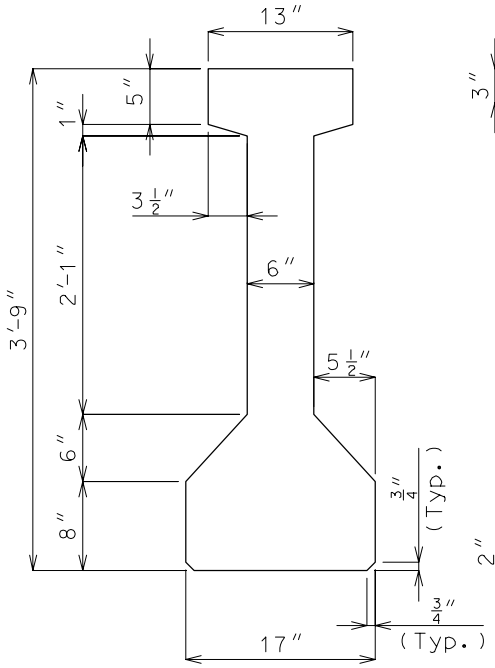

GIRDERS 57 THRU 70
A = 428.9 SQ. IN.
Y_b= 19.54 IN.
I = 92,450 IN.^{4}

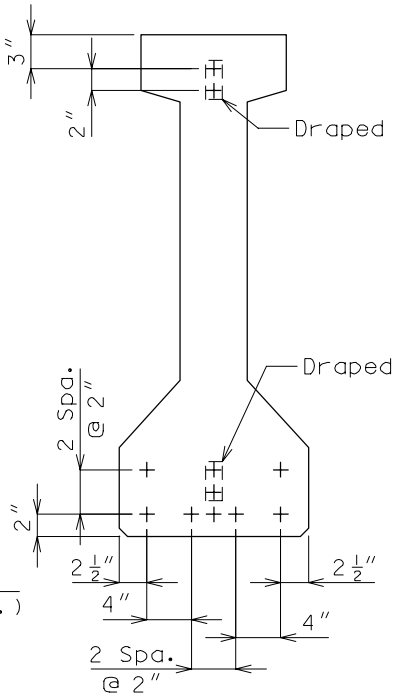

GIRDER SEQ. NO. 57
(9 STRANDS)

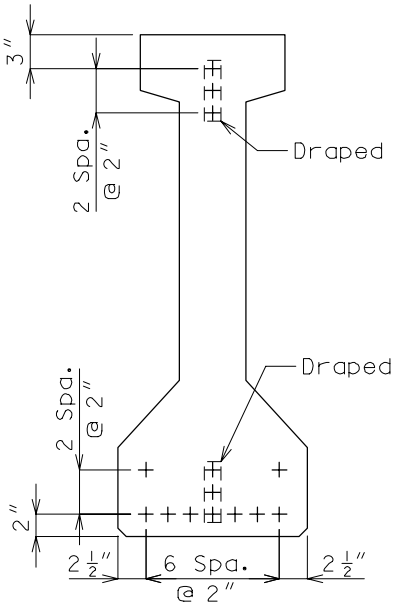

GIRDER SEQ. NO. 58
(11 STRANDS)

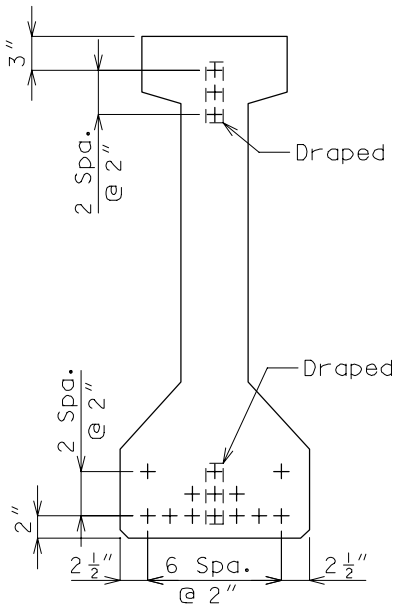

GIRDER SEQ. NO. 59
(13 STRANDS)

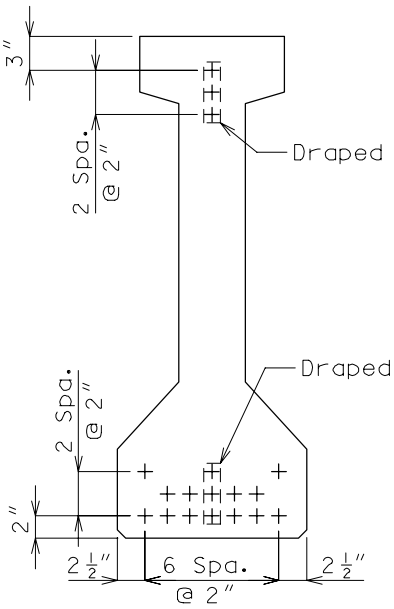

GIRDER SEQ. NO. 60
(15 STRANDS)

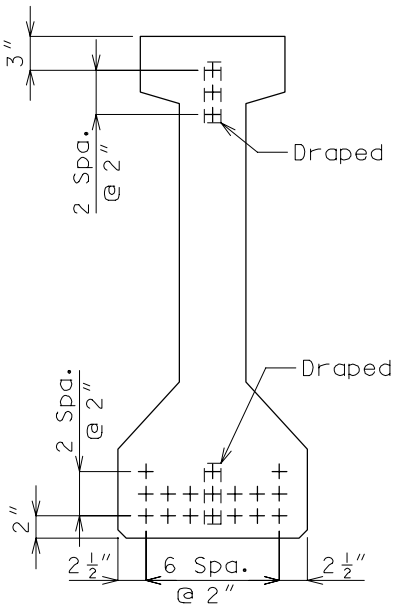

GIRDER SEQ. NO. 61
(17 STRANDS)

ATTENTION: Location of draped strands shown in top flange are at end of girder and draped strands in bottom flange are at centerline.

Design

BEAM TYPE 4, GROUP 2 (CONT.)
SECTION PROPERTIES AND STRAND ARRANGEMENT (SIMPLE SPAN)

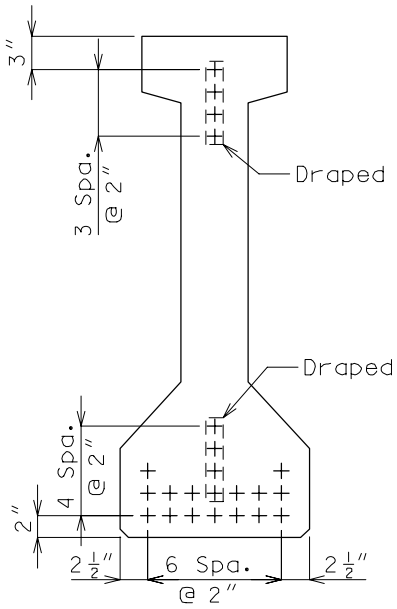

GIRDER SEQ. NO. 62
(19 STRANDS)

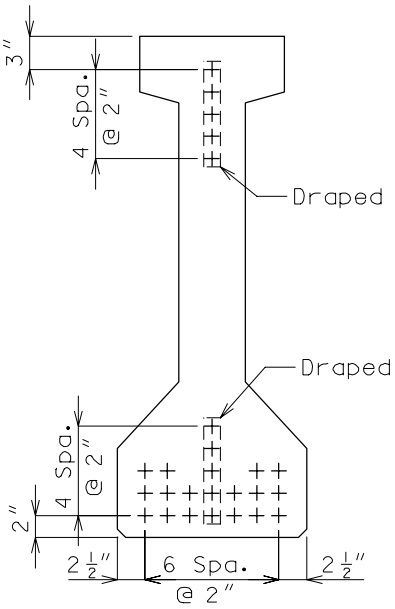

GIRDER SEQ. NO. 63
(21 STRANDS)

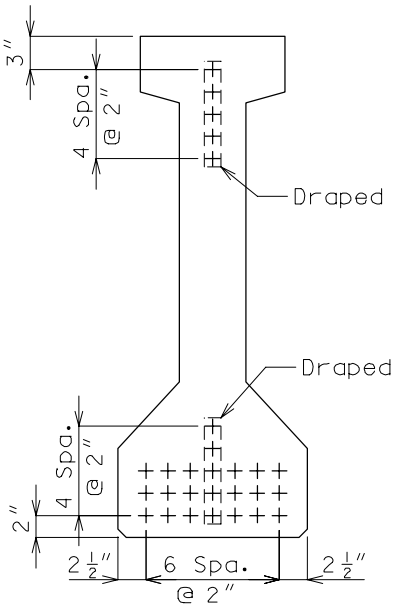

GIRDER SEQ. NO. 64
(23 STRANDS)

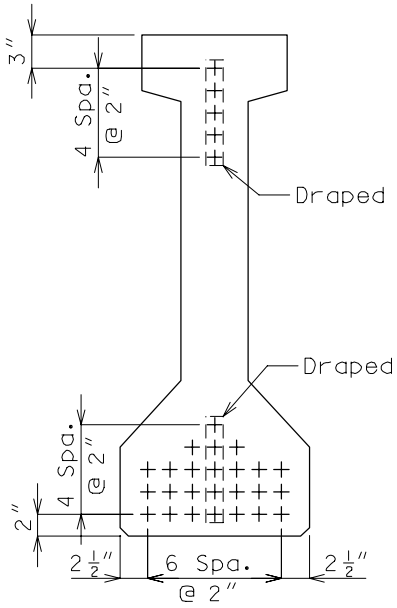

GIRDER SEQ. NO. 65
(25 STRANDS)

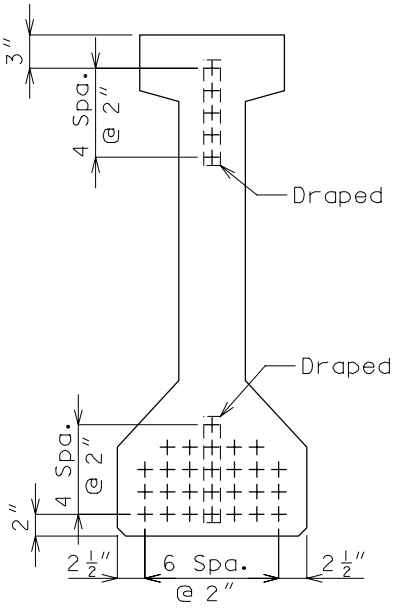

GIRDER SEQ. NO. 66
(27 STRANDS)

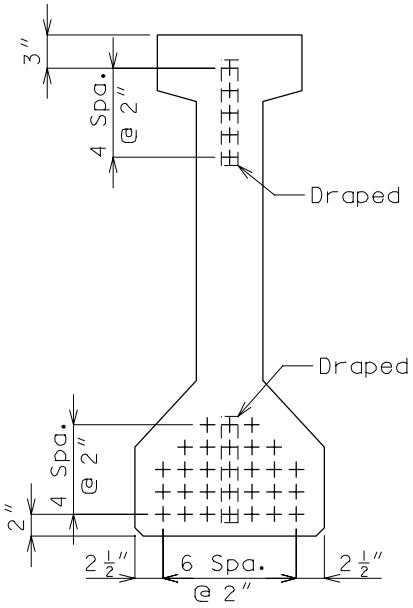

GIRDER SEQ. NO. 67
(29 STRANDS)

ATTENTION: Location of draped strands shown in top flange are at end of girder and draped strands in bottom flange are at centerline.

Design

BEAM TYPE 4, GROUP 2 (CONT.)
SECTION PROPERTIES AND STRAND ARRANGEMENT (SIMPLE SPAN)

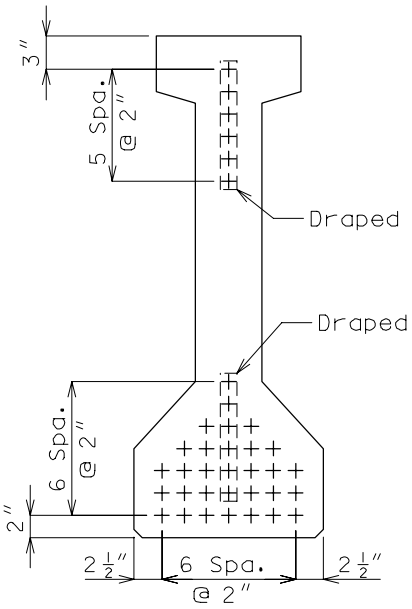

GIRDER SEQ. NO. 68
(31 STRANDS)

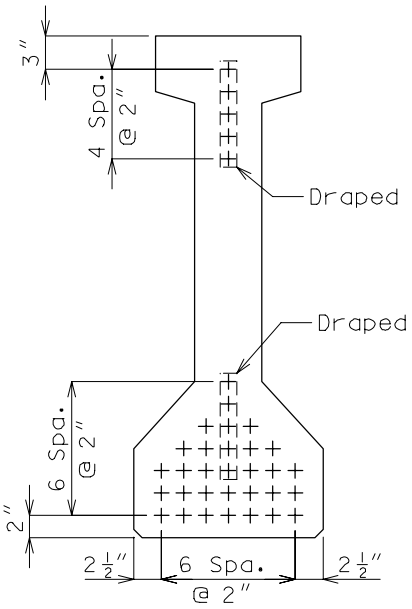

GIRDER SEQ. NO. 69
(31 STRANDS)

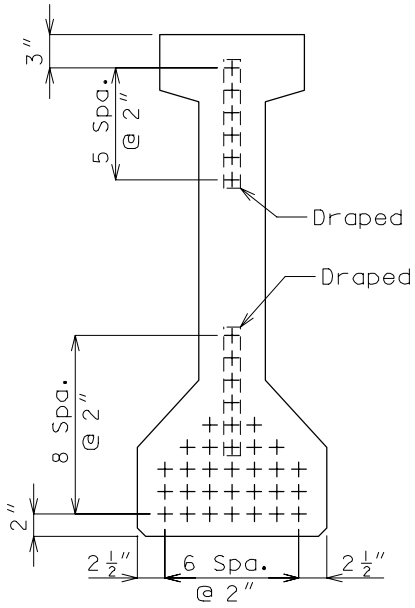

GIRDER SEQ. NO. 70
(33 STRANDS)

ATTENTION: Location of draped strands shown in top flange are at end of girder and draped strands in bottom flange are at centerline.

BEAM TYPE 4
SECTION PROPERTIES AND STRAND ARRANGEMENT (SIMPLE SPAN)

Note: Shown in the tables are the values of initial prestress force based on 31.0 kips/strand. Check computer output for value of maximum prestress force to be placed as initial prestress force on design plans.

BEAM TYPE 4, GROUP 1 (SIMPLE SPAN)								
GIRDER	41	42	43	44	45	46	47	48
Initial Prestress kips	248	310	372	434	496	496	558	620
Size of Strands	$\frac{1}{2}$	$\frac{1}{2}$	$\frac{1}{2}$	$\frac{1}{2}$	$\frac{1}{2}$	$\frac{1}{2}$	$\frac{1}{2}$	$\frac{1}{2}$
Straight Strands	4	6	8	10	10	12	12	14
Draped Strands	4	4	4	4	6	4	6	6

BEAM TYPE 4, GROUP 1 (SIMPLE SPAN)								
GIRDER	49	50	51	52	53	54	55	56
Initial Prestress kips	682	744	806	806	868	868	930	992
Size of Strands	$\frac{1}{2}$	$\frac{1}{2}$	$\frac{1}{2}$	$\frac{1}{2}$	$\frac{1}{2}$	$\frac{1}{2}$	$\frac{1}{2}$	$\frac{1}{2}$
Straight Strands	16	18	18	20	20	22	22	24
Draped Strands	6	6	8	6	8	6	8	8

BEAM TYPE 4, GROUP 2 (SIMPLE SPAN)							
GIRDER	57	58	59	60	61	62	63
Initial Prestress kips	279	341	403	465	527	589	651
Size of Strands	$\frac{1}{2}$	$\frac{1}{2}$	$\frac{1}{2}$	$\frac{1}{2}$	$\frac{1}{2}$	$\frac{1}{2}$	$\frac{1}{2}$
Straight Strands	7	8	10	12	14	15	16
Draped Strands	2	3	3	3	3	4	5

BEAM TYPE 4, GROUP 2 (SIMPLE SPAN)							
GIRDER	64	65	66	67	68	69	70
Initial Prestress kips	713	775	837	899	961	961	1023
Size of Strands	$\frac{1}{2}$	$\frac{1}{2}$	$\frac{1}{2}$	$\frac{1}{2}$	$\frac{1}{2}$	$\frac{1}{2}$	$\frac{1}{2}$
Straight Strands	18	20	22	24	25	26	27
Draped Strands	5	5	5	5	6	5	6

Note: For strand table used in computer program refer to Computer Manual, Program Number BR204.

Design

BEAM TYPE 6, GROUP 1
SECTION PROPERTIES AND STRAND ARRANGEMENT (CONTINUOUS SPANS)

✳ This value is used to compensate for bottom fillets not at 45° angles as assumed by BR200. (Less than 1% difference).

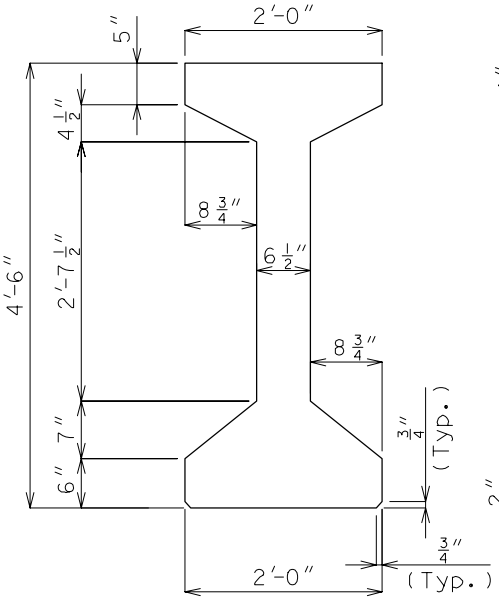

GIRDERS 141 THRU 153
A = 643.6 SQ. IN.
Y_b= 25.92 IN.
I = 235,735 IN.^{4} ✳

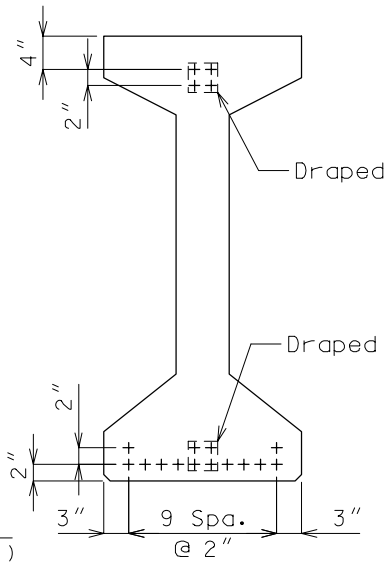

GIRDER SEQ. NO. 141
(14 STRANDS - 4 DRAPED)

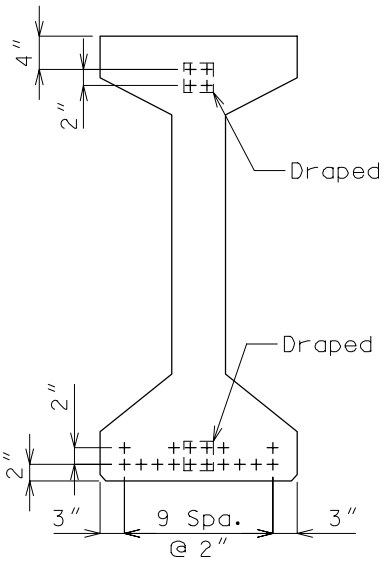

GIRDER SEQ. NO. 142
(16 STRANDS - 4 DRAPED)

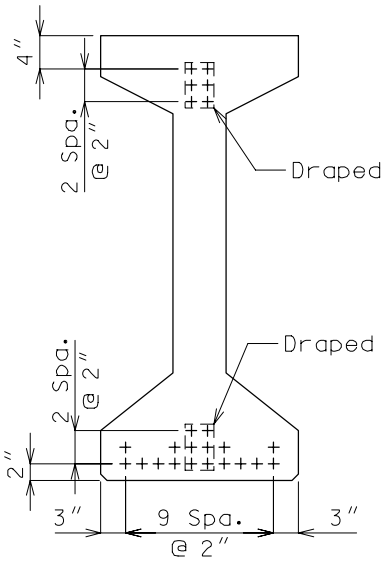

GIRDER SEQ. NO. 143
(18 STRANDS - 6 DRAPED)

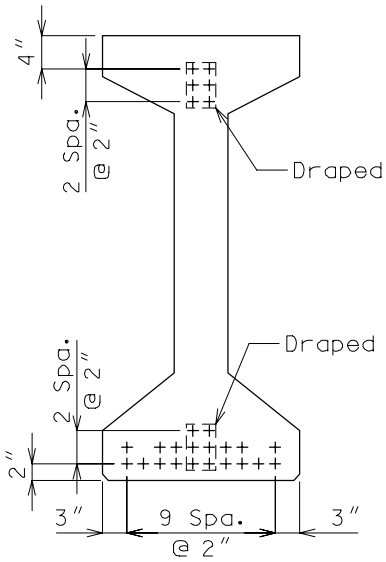

GIRDER SEQ. NO. 144
(20 STRANDS - 6 DRAPED)

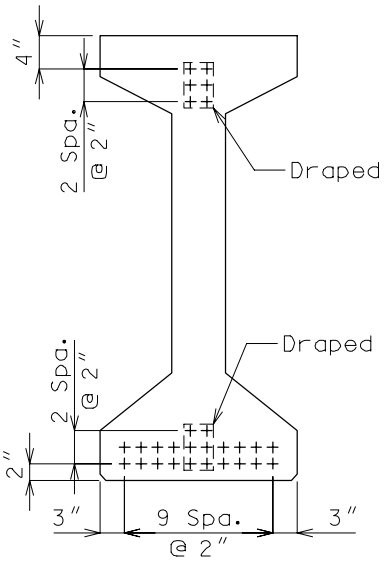

GIRDER SEQ. NO. 145
(22 STRANDS - 6 DRAPED)

ATTENTION: Location of draped strands shown in top flange are at end of girder and draped strands in bottom flange are at centerline.

BEAM TYPE 6, GROUP 1 (CONT.) **Design**
SECTION PROPERTIES AND STRAND ARRANGEMENT (CONTINUOUS SPANS)

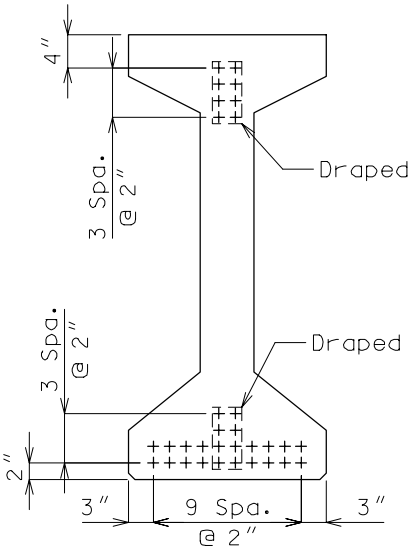

GIRDER SEQ. NO. 146
(24 STRANDS - 8 DRAPED)

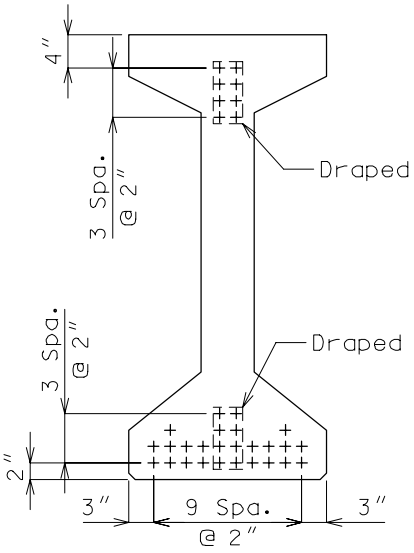

GIRDER SEQ. NO. 147
(26 STRANDS - 8 DRAPED)

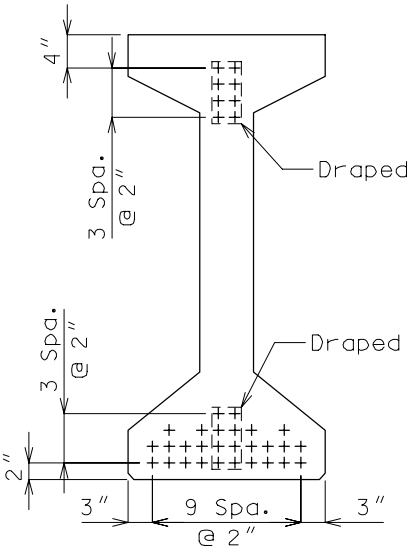

GIRDER SEQ. NO. 148
(28 STRANDS - 8 DRAPED)

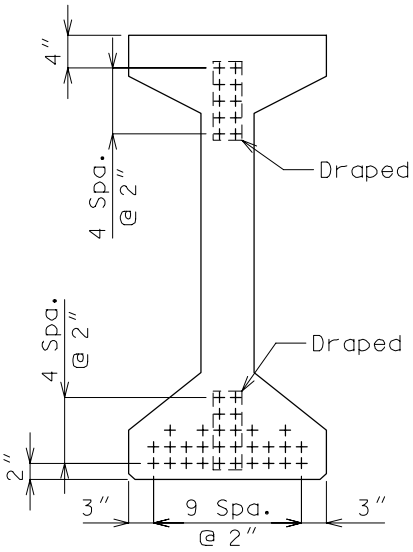

GIRDER SEQ. NO. 149
(30 STRANDS - 10 DRAPED)

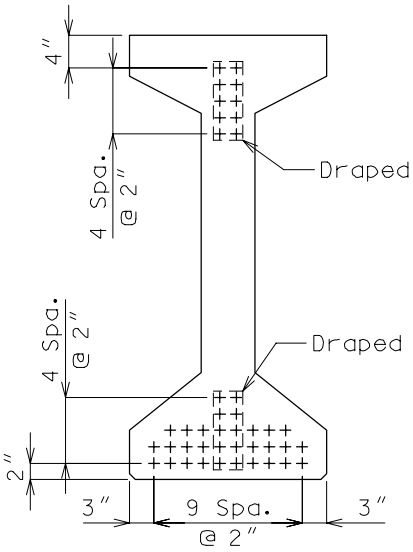

GIRDER SEQ. NO. 150
(32 STRANDS - 10 DRAPED)

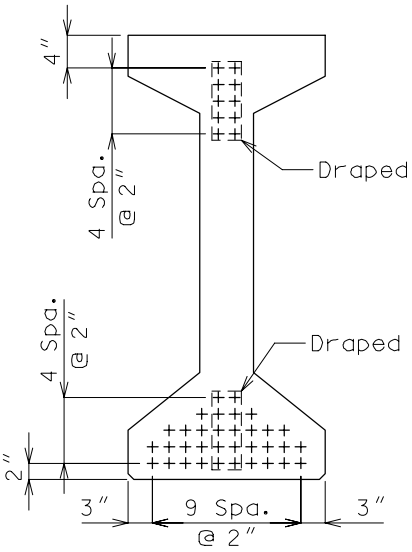

GIRDER SEQ. NO. 151
(34 STRANDS - 10 DRAPED)

ATTENTION: Location of draped strands shown in top flange are at end of girder and draped strands in bottom flange are at centerline.

BEAM TYPE 6, GROUP 1 (CONT.)
SECTION PROPERTIES AND STRAND ARRANGEMENT (CONTINUOUS SPANS)

Note: The preceding strand arrangements are the same for Simple Span Computer Program, except the Girder Seq. No. are 83 thru 95

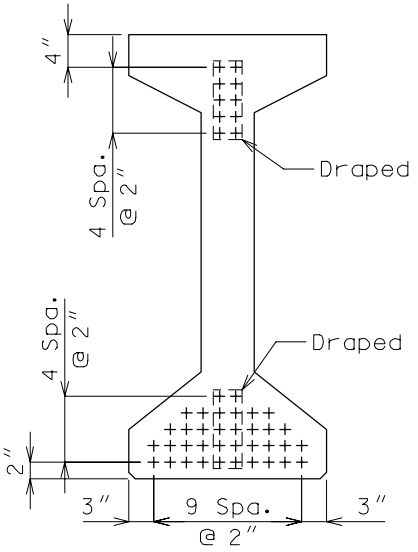

GIRDER SEQ. NO. 152
(36 STRANDS - 10 DRAPED)

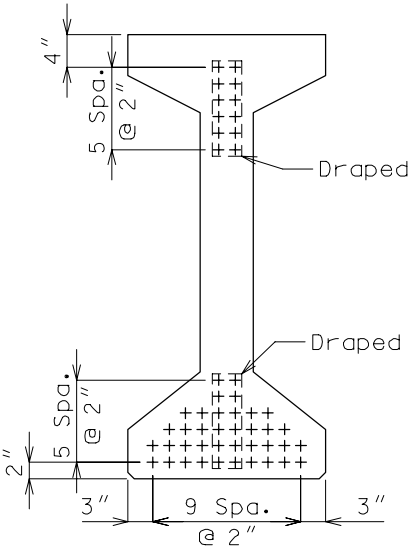

GIRDER SEQ. NO. 153
(38 STRANDS - 12 DRAPED)

ATTENTION: Location of draped strands shown in top flange are at end of girder and draped strands in bottom flange are at centerline.

BEAM TYPE 6, GROUP 1 (CONT.) **Design**
SECTION PROPERTIES AND STRAND ARRANGEMENT (CONTINUOUS SPANS)

Note: Shown in the tables are the values of initial prestress force based on 31.0 kips/strand. Check computer output for value of maximum prestress force to be placed as initial prestress force on design plans.

BEAM TYPE 6, GROUP 1 (CONTINUOUS SPANS)													
GIRDER	141	142	143	144	145	146	147	148	149	150	151	152	153
Initial Prestress kips	434	496	558	620	682	744	806	868	930	992	1054	1116	1178
Size of Strands	$\frac{1}{2}$	$\frac{1}{2}$	$\frac{1}{2}$	$\frac{1}{2}$	$\frac{1}{2}$	$\frac{1}{2}$	$\frac{1}{2}$	$\frac{1}{2}$	$\frac{1}{2}$	$\frac{1}{2}$	$\frac{1}{2}$	$\frac{1}{2}$	$\frac{1}{2}$
Straight Strands	10	12	12	14	16	16	18	20	20	22	24	26	26
Draped Strands	4	4	6	6	6	8	8	8	10	10	10	10	12

Note: For strand table used in computer program refer to Computer Manual, Program Number BR200.

Investigate the possibility of using all straight strands when strength check of a hold-down device exceeds allowable. (See this section page 1.1-13).

Design

BEAM TYPE 7, GROUP 1
SECTION PROPERTIES AND STRAND ARRANGEMENT (CONTINUOUS SPANS)

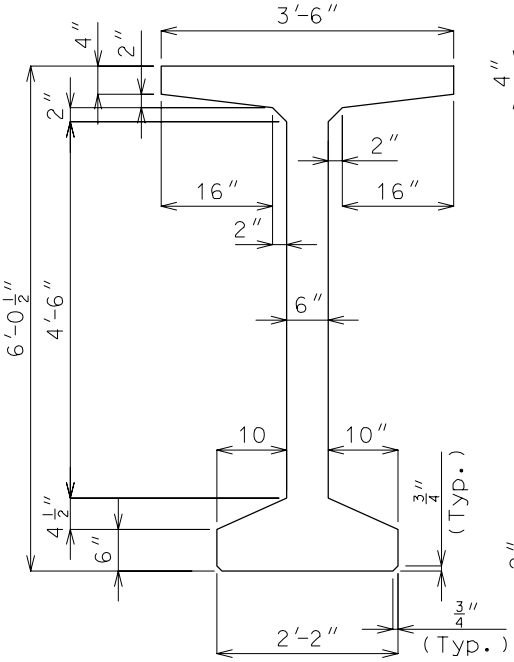

GIRDERS 174 THRU 187
A = 787.4 SQ. IN.
Y_b= 37.58 IN.
I = 571,047 IN.^{4}

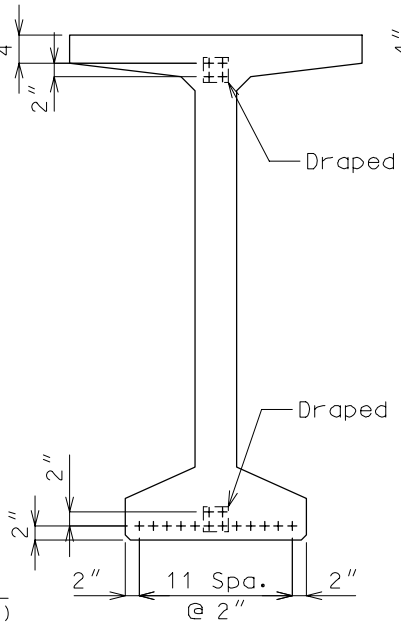

GIRDER SEQ. NO. 174
(14 STRANDS - 4 DRAPED)

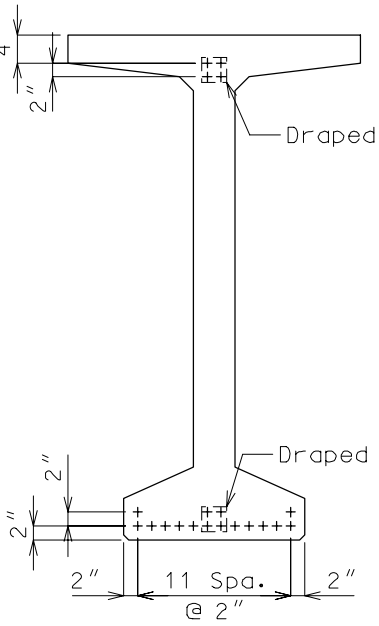

GIRDER SEQ. NO. 175
(16 STRANDS - 4 DRAPED)

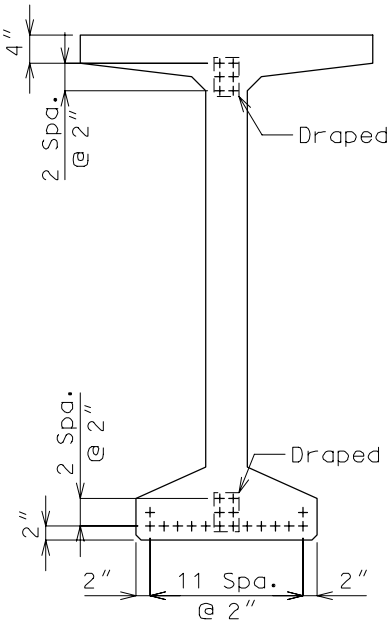

GIRDER SEQ. NO. 176
(18 STRANDS - 6 DRAPED)

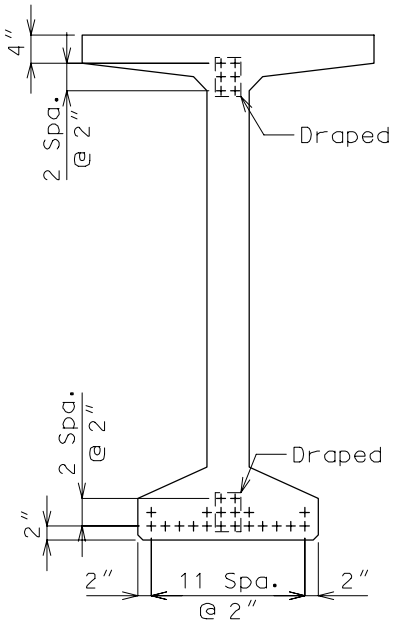

GIRDER SEQ. NO. 177
(20 STRANDS - 6 DRAPED)

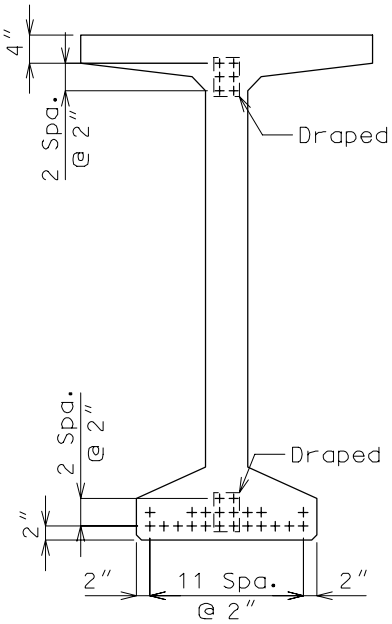

GIRDER SEQ. NO. 178
(22 STRANDS - 6 DRAPED)

ATTENTION: Location of draped strands shown in top flange are at end of girder and draped strands in bottom flange are at centerline.

Design

BEAM TYPE 7, GROUP 1 (CONT.)
SECTION PROPERTIES AND STRAND ARRANGEMENT (CONTINUOUS SPANS)

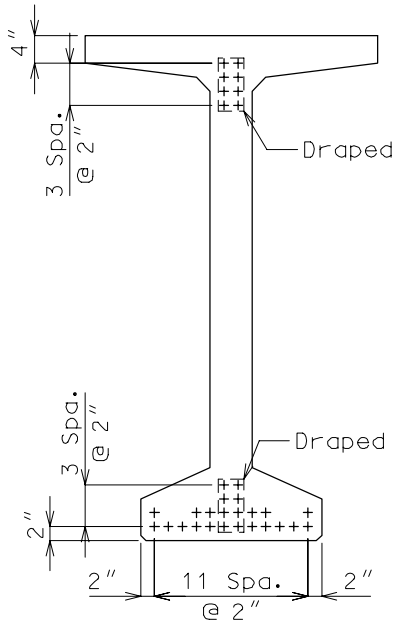

GIRDER SEQ. NO. 179
(24 STRANDS - 8 DRAPED)

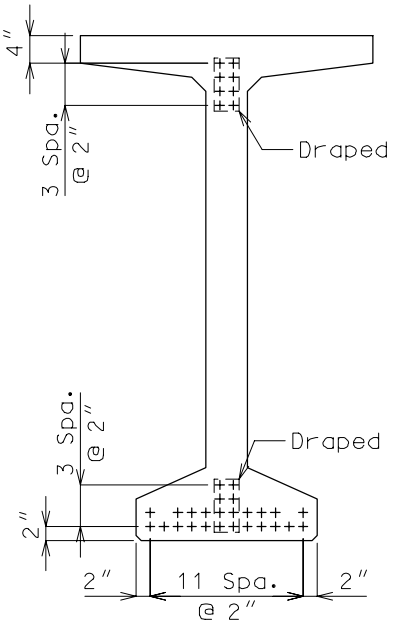

GIRDER SEQ. NO. 180
(26 STRANDS - 8 DRAPED)

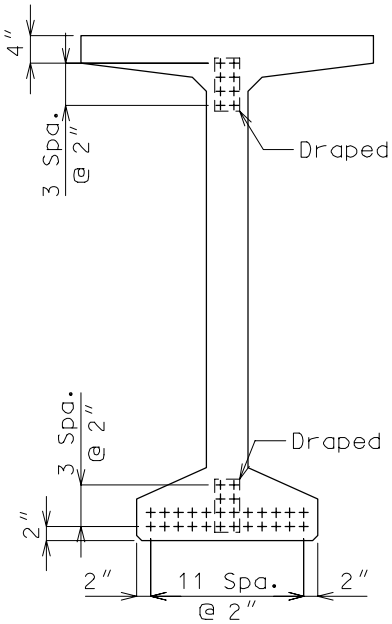

GIRDER SEQ. NO. 181
(28 STRANDS - 8 DRAPED)

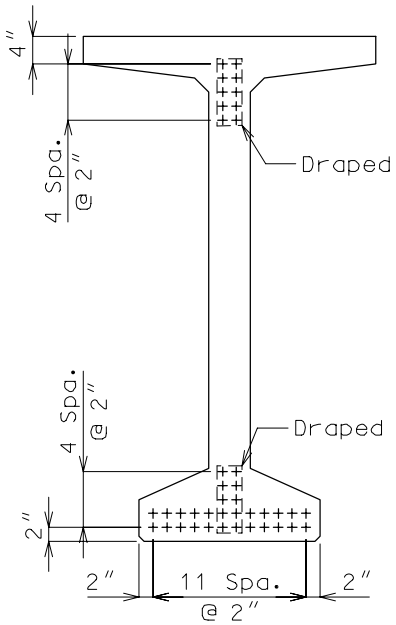

GIRDER SEQ. NO. 182
(30 STRANDS - 10 DRAPED)

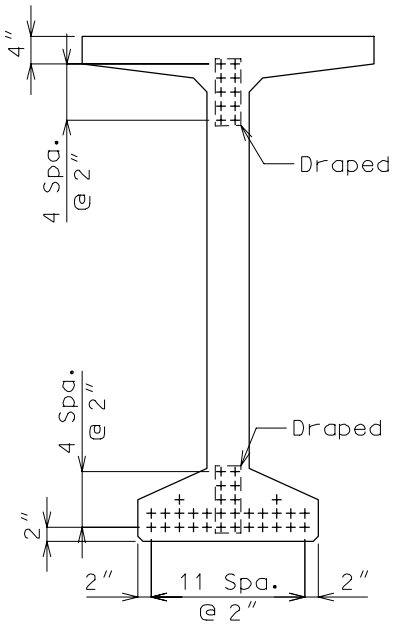

GIRDER SEQ. NO. 183
(32 STRANDS - 10 DRAPED)

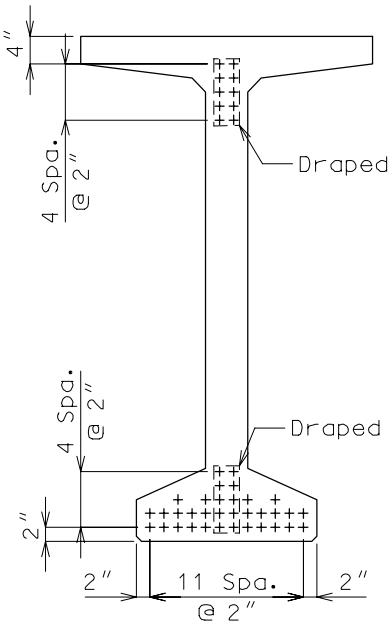

GIRDER SEQ. NO. 184
(34 STRANDS - 10 DRAPED)

ATTENTION: Location of draped strands shown in top flange are at end of girder and draped strands in bottom flange are at centerline.

Design

BEAM TYPE 7, GROUP 1 (CONT.)
SECTION PROPERTIES AND STRAND ARRANGEMENT (CONTINUOUS SPANS)

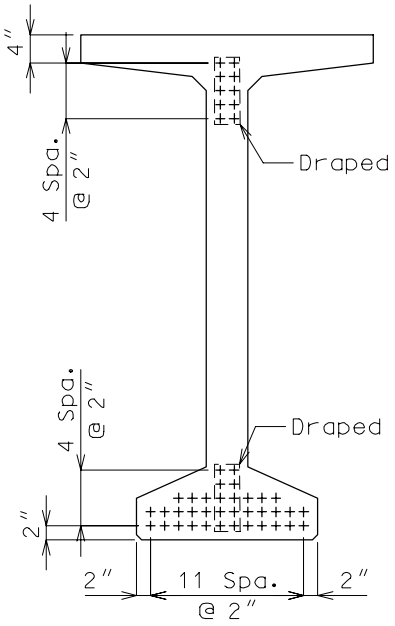

GIRDER SEQ. NO. 185
(36 STRANDS - 10 DRAPED)

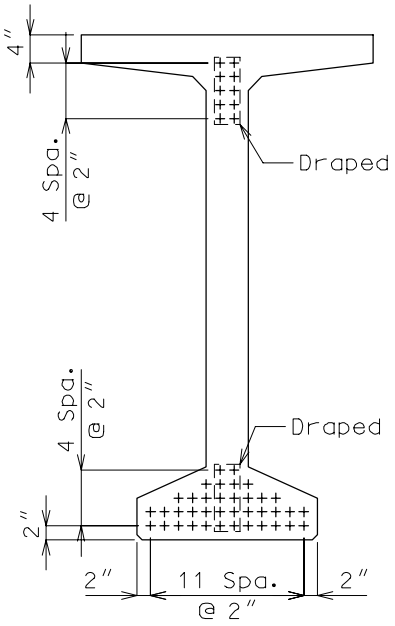

GIRDER SEQ. NO. 186
(38 STRANDS - 10 DRAPED)

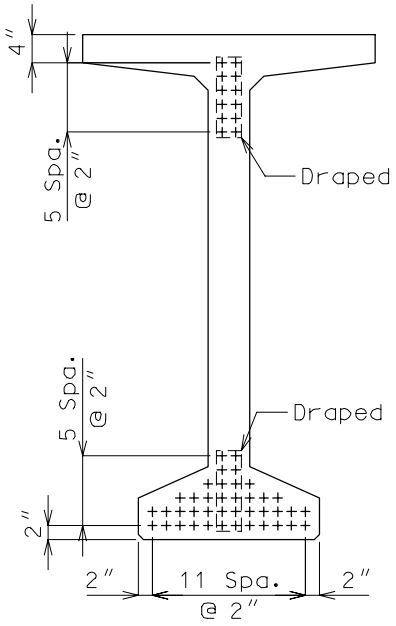

GIRDER SEQ. NO. 187
(40 STRANDS - 12 DRAPED)

ATTENTION: Location of draped strands shown in top flange are at end of girder and draped strands in bottom flange are at centerline.

The following properties for prestressed I-girders are valid for both f'_c=5,000 psi and f'_c=6,000 psi. The modification factor, N, is 8 for the initial moment of inertia and 7 for the final moment of inertia.

Section Properties

Beam Type 2 -- 6" Web

Section Area=	310.9	in^2
Section Y_b=	14.08	in
$I_{nontransformed}$=	33,974	in^4
Depth=	32	in
Strand Size=	½	in

Cont.								$I_{initial}$		I_{final}	
Span	#	T	D	S	E1D	E2D	E3D	(A1=#5)	(A1=#6)	(A1=#5)	(A1=#6)
Group	11	8	4	4	11.08	11.08	13.92	36,147	36,627	35,837	36,248
I	12	10	4	6	11.41	11.08	13.92	36,453	36,938	36,100	36,515
	13	12	6	6	11.41	10.08	12.92	36,587	37,075	36,215	36,632
	14	14	6	8	11.08	10.08	12.92	36,794	37,286	36,394	36,814
	15	16	8	8	11.08	9.08	11.92	36,866	37,360	36,456	36,878
	16	18	8	10	10.48	9.08	11.92	36,994	37,491	36,568	36,992
Group	20	8	2	6	11.41	10.08	14.92	36,147	36,627	35,837	36,248
II	21	10	2	8	11.58	10.08	14.92	36,453	36,938	36,100	36,515
	22	12	4	8	11.08	11.08	13.92	36,663	37,151	36,280	36,698
	23	14	4	10	11.28	9.08	13.92	36,794	37,286	36,394	36,814
	24	16	6	10	11.28	8.08	12.92	36,866	37,360	36,456	36,878
	25	18	6	12	10.75	8.08	12.92	36,994	37,491	36,568	36,992
Simple Span											
Group	12	8	4	4	11.08	11.08	13.92	36,147	36,627	35,837	36,248
I	13	10	4	6	11.41	11.08	13.92	36,453	36,938	36,100	36,515
	14	12	4	8	11.08	11.08	13.92	36,663	37,151	36,280	36,698
	15	14	4	10	11.28	9.08	13.92	36,794	37,286	36,394	36,814
	16	16	6	10	11.28	8.08	12.92	36,866	37,360	36,456	36,878
	17	18	6	12	10.75	8.08	12.92	36,994	37,491	36,568	36,992
	18	20	6	14	10.65	6.08	12.92	37,024	37,522	36,594	37,019

NOTE: # = sequence number
T = total number of strands
D = draped strands
S = straight strands

Section Properties

Beam Type 2 -- 7" Web

Section Area=	342.9	in^2
Section Y_b=	14.26	in
$I_{nontransformed}$=	36,812	in^4
Depth=	32	in
Strand Size=	½	in

Cont.								$I_{initial}$		I_{final}	
Span	#	T	D	S	E1D	E2D	E3D	(A1=#5)	(A1=#6)	(A1=#5)	(A1=#6)
Group	11	8	4	4	11.26	11.26	13.74	38,994	39,464	38,683	39,085
I	12	10	4	6	11.59	11.26	13.74	39,310	39,784	38,954	39,360
	13	12	6	6	11.59	10.26	12.74	39,450	39,927	39,075	39,482
	14	14	6	8	11.26	10.26	12.74	39,666	40,146	39,261	39,671
	15	16	8	8	11.26	9.26	11.74	39,742	40,225	39,327	39,739
	16	18	8	10	10.66	9.26	11.74	39,877	40,363	39,444	39,858
Group	20	8	2	6	11.59	10.26	14.74	38,994	39,464	38,683	39,085
II	21	10	2	8	11.76	10.26	14.74	39,310	39,784	38,954	39,360
	22	12	4	8	11.26	11.26	13.74	39,528	40,005	39,142	39,550
	23	14	4	10	11.46	9.26	13.74	39,666	40,146	39,261	39,671
	24	16	6	10	11.46	8.26	12.74	39,742	40,225	39,327	39,739
	25	18	6	12	10.93	8.26	12.74	39,877	40,363	39,444	39,858
Simple Span											
Group	12	8	4	4	11.26	11.26	13.74	38,994	39,464	38,683	39,085
I	13	10	4	6	11.59	11.26	13.74	39,310	39,784	38,954	39,360
	14	12	4	8	11.26	11.26	13.74	39,528	40,005	39,142	39,550
	15	14	4	10	11.46	9.26	13.74	39,666	40,146	39,261	39,671
	16	16	6	10	11.46	8.26	12.74	39,742	40,225	39,327	39,739
	17	18	6	12	10.93	8.26	12.74	39,877	40,363	39,444	39,858
	18	20	6	14	10.83	6.26	12.74	39,910	39,473	39,473	39,888

NOTE: # = sequence number
T = total number of strands
D = draped strands
S = straight strands

Section Properties
Beam Type 2 -- 8" Web

Section Area=	374.9	in^2
Section Y_b=	14.41	in
$I_{nontransformed}$=	39,632	in^4
Depth=	32	in
Strand Size=	½	in

Cont.								$I_{initial}$		I_{final}	
Span	#	T	D	S	E1D	E2D	E3D	(A1=#5)	(A1=#6)	(A1=#5)	(A1=#6)
Group	11	8	4	4	11.41	11.41	13.59	41,823	42,283	41,510	41,905
I	12	10	4	6	11.74	11.41	13.59	42,147	42,611	41,789	42,186
	13	12	6	6	11.74	10.41	12.59	42,292	42,760	41,914	42,313
	14	14	6	8	11.41	10.41	12.59	42,515	42,985	42,106	42,508
	15	16	8	8	11.41	9.41	11.59	42,596	43,068	42,176	42,579
	16	18	8	10	10.81	9.41	11.59	42,737	43,212	42,298	42,703
Group	20	8	2	6	11.74	10.41	14.59	41,823	42,283	41,510	41,905
II	21	10	2	8	11.91	10.41	14.59	42,147	42,611	41,789	42,186
	22	12	4	8	11.41	11.41	13.59	42,371	42,839	41,982	42,382
	23	14	4	10	11.61	9.41	13.59	42,515	42,985	42,106	42,508
	24	16	6	10	11.61	8.41	12.59	42,596	43,068	42,176	42,579
	25	18	6	12	11.08	8.41	12.59	42,737	43,212	42,298	42,703
Simple Span											
Group	12	8	4	4	11.41	11.41	13.59	41,823	42,283	41,510	41,905
I	13	10	4	6	11.74	11.41	13.59	42,147	42,611	41,789	42,186
	14	12	4	8	11.41	11.41	13.59	42,371	42,839	41,982	42,382
	15	14	4	10	11.61	9.41	13.59	42,515	42,985	42,106	42,508
	16	16	6	10	11.61	8.41	12.59	42,596	43,068	42,176	42,579
	17	18	6	12	11.08	8.41	12.59	42,737	43,212	42,298	42,703
	18	20	6	14	10.98	6.41	12.59	42,772	43,249	42,329	42,736

NOTE: # = sequence number
T = total number of strands
D = draped strands
S = straight strands

Section Properties

Beam Type 3 -- 6" Web

Section Area=	381.9	in^2
Section Y_b=	17.08	in
$I_{nontransformed}$=	61,841	in^4
Depth=	39	in
Strand Size=	½	in

Cont.								$I_{initial}$		I_{final}	
Span	#	T	D	S	E1D	E2D	E3D	(A1=#5)	(A1=#6)	(A1=#5)	(A1=#6)
Group	36	8	4	4	13.08	14.08	17.92	65,179	65,930	64,702	65,346
I	37	10	4	6	13.75	14.08	17.92	65,659	66,415	65,114	65,762
	38	12	4	8	13.58	14.08	17.92	66,014	66,776	65,421	66,072
	39	14	6	8	13.58	13.08	16.92	66,265	67,032	65,637	66,292
	40	16	6	10	13.48	13.08	16.92	66,614	67,386	65,938	66,597
	41	18	8	10	13.48	12.08	15.92	66,776	67,552	66,079	66,740
	42	20	8	12	13.08	12.08	15.92	67,020	67,799	66,290	66,954
	43	22	8	14	12.51	12.08	15.92	67,178	67,961	66,427	67,095
	44	24	10	14	12.51	11.08	14.92	67,270	68,056	66,508	67,177
Group	55	8	2	6	13.75	13.08	18.92	65,179	65,930	64,702	65,346
II	56	10	2	8	14.08	13.08	18.92	65,659	66,415	65,114	65,762
	57	12	2	10	13.88	13.08	18.92	66,014	66,776	65,421	66,072
	58	14	4	10	13.48	14.08	17.92	66,366	67,134	65,724	66,379
	59	16	4	12	13.75	12.08	17.92	66,614	67,386	65,938	66,597
	60	18	6	12	13.75	11.08	16.92	66,776	67,552	66,079	66,740
	61	20	6	14	13.37	11.08	16.92	67,020	67,799	66,290	66,954
	62	22	6	16	12.83	11.08	16.92	67,178	67,961	66,427	67,095
	63	24	8	16	12.83	10.08	15.92	67,270	68,056	66,508	67,177
Simple Span											
Group	26	8	4	4	13.08	14.08	17.92	65,179	65,930	64,702	65,346
I	27	10	4	6	13.75	14.08	17.92	65,659	66,415	65,114	65,762
	28	12	4	8	13.58	14.08	17.92	66,014	66,776	65,421	66,072
	29	14	4	10	13.48	14.08	17.92	66,366	67,134	65,724	66,379
	30	16	4	12	13.75	12.08	17.92	66,614	67,386	65,938	66,597
	31	18	6	12	13.75	11.08	16.92	66,776	67,552	66,079	66,740
	32	20	6	14	13.37	11.08	16.92	67,020	67,799	66,290	66,954
	33	22	6	16	12.83	11.08	16.92	67,178	67,961	66,427	67,095
	34	24	8	16	12.83	10.08	15.92	67,270	68,056	66,508	67,177

NOTE: # = sequence number
T = total number of strands
D = draped strands
S = straight strands

Section Properties

Beam Type 3 -- 7" Web

Section Area=	420.9	in^2
Section Y_b=	17.31	in
$I_{nontransformed}$=	66,991	in^4
Depth=	39	in
Strand Size=	½	in

Cont.								$I_{initial}$		I_{final}	
Span	#	T	D	S	E1D	E2D	E3D	(A1=#5)	(A1=#6)	(A1=#5)	(A1=#6)
Group	36	8	4	4	13.31	14.31	17.69	70,343	71,077	69,865	70,493
I	37	10	4	6	13.98	14.31	17.69	70,838	71,577	70,289	70,922
	38	12	4	8	13.81	14.31	17.69	71,207	71,951	70,607	71,243
	39	14	6	8	13.81	13.31	16.69	71,469	72,218	70,833	71,473
	40	16	6	10	13.71	13.31	16.69	71,832	72,585	71,146	71,789
	41	18	8	10	13.71	12.31	15.69	72,004	72,760	71,295	71,940
	42	20	8	12	13.31	12.31	15.69	72,259	73,019	71,516	72,164
	43	22	8	14	12.74	12.31	15.69	72,427	73,190	71,662	72,312
	44	24	10	14	12.74	11.31	14.69	72,526	73,292	71,749	72,401
Group	55	8	2	6	13.98	13.31	18.69	70,343	71,077	69,865	70,493
II	56	10	2	8	14.31	13.31	18.69	70,838	71,577	70,289	70,922
	57	12	2	10	14.11	13.31	18.69	71,207	71,951	70,607	71,243
	58	14	4	10	13.71	14.31	17.69	71,572	72,322	70,922	71,562
	59	16	4	12	13.98	12.31	17.69	71,832	72,585	71,146	71,789
	60	18	6	12	13.98	11.31	16.69	72,004	72,760	71,295	71,940
	61	20	6	14	13.60	11.31	16.69	72,259	73,019	71,516	72,164
	62	22	6	16	13.06	11.31	16.69	72,427	73,190	71,662	72,312
	63	24	8	16	13.06	10.31	15.69	72,526	73,292	71,749	72,401
Simple Span											
Group	26	8	4	4	13.31	14.31	17.69	70,343	71,077	69,865	70,493
I	27	10	4	6	13.98	14.31	17.69	70,838	71,577	70,289	70,922
	28	12	4	8	13.81	14.31	17.69	71,207	71,951	70,607	71,243
	29	14	4	10	13.71	14.31	17.69	71,572	72,322	70,922	71,562
	30	16	4	12	13.98	12.31	17.69	71,832	72,585	71,146	71,789
	31	18	6	12	13.98	11.31	16.69	72,004	72,760	71,295	71,940
	32	20	6	14	13.60	11.31	16.69	72,259	73,019	71,516	72,164
	33	22	6	16	13.06	11.31	16.69	72,427	73,190	71,662	72,312
	34	24	8	16	13.06	10.31	15.69	72,526	73,292	71,749	72,401

NOTE: # = sequence number
T = total number of strands
D = draped strands
S = straight strands

Section Properties

Beam Type 3 -- 8" Web

Section Area=	459.9	in^2
Section Y_b=	17.49	in
$I_{nontransformed}$=	72,106	in^4
Depth=	39	in
Strand Size=	½	in

Cont.								$I_{initial}$		I_{final}	
Span	#	T	D	S	E1D	E2D	E3D	(A1=#5)	(A1=#6)	(A1=#5)	(A1=#6)
Group	36	8	4	4	13.49	14.49	17.51	75,470	76,191	74,990	75,607
I	37	10	4	6	14.16	14.49	17.51	75,977	76,703	75,425	76,046
	38	12	4	8	13.99	14.49	17.51	76,357	77,087	75,752	76,376
	39	14	6	8	13.99	13.49	16.51	76,628	77,363	75,986	76,613
	40	16	6	10	13.89	13.49	16.51	77,002	77,740	76,308	76,939
	41	18	8	10	13.89	12.49	15.51	77,182	77,923	76,464	77,096
	42	20	8	12	13.49	12.49	15.51	77,446	78,191	76,692	77,328
	43	22	8	14	12.92	12.49	15.51	77,622	78,370	76,845	77,483
	44	24	10	14	12.92	11.49	14.51	77,728	78,479	76,938	77,577
Group	55	8	2	6	14.16	13.49	18.51	75,470	76,191	74,990	75,607
II	56	10	2	8	14.49	13.49	18.51	75,977	76,703	75,425	76,046
	57	12	2	10	14.29	13.49	18.51	76,357	77,087	75,752	76,376
	58	14	4	10	13.89	14.49	17.51	76,733	77,468	76,076	76,704
	59	16	4	12	14.16	12.49	17.51	77,002	77,740	76,308	76,939
	60	18	6	12	14.16	11.49	16.51	77,182	77,923	76,464	77,096
	61	20	6	14	13.78	11.49	16.51	77,446	78,191	76,692	77,328
	62	22	6	16	13.24	11.49	16.51	77,622	78,370	76,845	77,483
	63	24	8	16	13.24	10.49	15.51	77,728	78,479	76,938	77,577
Simple Span											
Group	26	8	4	4	13.49	14.49	17.51	75,470	76,191	74,990	75,607
I	27	10	4	6	14.16	14.49	17.51	75,977	76,703	75,425	76,046
	28	12	4	8	13.99	14.49	17.51	76,357	77,087	75,752	76,376
	29	14	4	10	13.89	14.49	17.51	76,733	77,468	76,076	76,704
	30	16	4	12	14.16	12.49	17.51	77,002	77,740	76,308	76,939
	31	18	6	12	14.16	11.49	16.51	77,182	77,923	76,464	77,096
	32	20	6	14	13.78	11.49	16.51	77,446	78,191	76,692	77,328
	33	22	6	16	13.24	11.49	16.51	77,622	78,370	76,845	77,483
	34	24	8	16	13.24	10.49	15.51	77,728	78,479	76,938	77,577

NOTE: # = sequence number
T = total number of strands
D = draped strands
S = straight strands

Section Properties

Beam Type 4 -- 6" Web

Section Area=	428.9	in^2
Section Y_b=	19.54	in
$I_{nontransformed}$=	92,450	in^4
Depth=	45	in
Strand Size=	½	in

Cont.								$I_{initial}$		I_{final}	
Span	#	T	D	S	E1D	E2D	E3D	(A1=#5)	(A1=#6)	(A1=#5)	(A1=#6)
Group	86	8	4	4	15.54	16.54	21.46	97,077	98,118	96,416	97,308
I	87	10	4	6	16.21	16.54	21.46	97,727	98,775	96,974	97,872
	88	12	4	8	16.04	16.54	21.46	98,231	99,286	97,408	98,310
	89	14	6	8	16.04	15.54	20.46	98,608	99,669	97,733	98,640
	90	16	6	10	15.94	15.54	20.46	99,103	100,170	98,160	99,071
	91	18	8	10	15.94	14.54	19.46	99,368	100,441	98,390	99,305
	92	20	8	12	15.54	14.54	19.46	99,735	100,813	98,707	99,626
	93	22	8	14	14.97	14.54	19.46	99,995	101,078	98,933	99,856
	94	24	8	16	15.29	12.54	19.46	100,168	101,254	99,083	100,009
	95	26	10	16	15.29	11.54	18.46	100,271	101,360	99,174	100,102
	96	28	10	18	15.32	9.54	18.46	100,323	101,414	99,220	100,149
Group	101	8	2	6	16.21	15.54	22.46	97,077	98,118	96,416	97,308
II	102	10	2	8	16.54	15.54	22.46	97,727	98,775	96,974	97,872
	103	12	4	8	16.04	16.54	21.46	98,231	99,286	97,408	98,310
	104	14	4	10	15.94	16.54	21.46	98,730	99,792	97,838	98,745
	105	16	6	10	15.94	15.54	20.46	99,103	100,170	98,160	99,071
	106	18	6	12	16.21	13.54	20.46	99,368	100,441	98,390	99,305
	107	20	6	14	15.83	13.54	20.46	99,735	100,813	98,707	99,626
	108	22	6	16	15.29	13.54	20.46	99,995	101,078	98,933	99,856
	109	24	6	18	15.32	11.54	20.46	100,168	101,254	99,083	100,009
	110	26	8	18	15.32	10.54	19.46	100,271	101,360	99,174	100,102
	111	28	8	20	15.14	8.54	19.46	100,323	101,414	99,220	100,149
	112	30	8	22	14.81	6.54	19.46	100,341	101,433	99,236	100,166
	113	32	8	24	14.37	4.54	19.46	100,342	101,435	99,238	100,168

NOTE: # = sequence number
T = total number of strands
D = draped strands
S = straight strands

Section Properties

Beam Type 4 -- 6" Web (continued)

Section Area=	428.9	in^2
Section Y_b=	19.54	in
$I_{nontransformed}$=	92,450	in^4
Depth=	45	in
Strand Size=	½	in

Simple								$I_{initial}$		I_{final}	
Span	#	T	D	S	E1D	E2D	E3D	(A1=#5)	(A1=#6)	(A1=#5)	(A1=#6)
Group	41	8	4	4	15.54	16.54	21.46	97,077	98,118	96,416	97,308
I	42	10	4	6	16.21	16.54	21.46	97,727	98,775	96,974	97,872
	43	12	4	8	16.04	16.54	21.46	98,231	99,286	97,408	98,310
	44	14	4	10	15.94	16.54	21.46	98,730	99,792	97,838	98,745
	45	16	6	10	15.94	15.54	20.46	99,103	100,170	98,160	99,071
	46	16	4	12	16.21	14.54	21.46	99,103	100,170	98,160	99,071
	47	18	6	12	16.21	13.54	20.46	99,368	100,441	98,390	99,305
	48	20	6	14	15.83	13.54	20.46	99,735	100,813	98,707	99,626
	49	22	6	16	15.29	13.54	20.46	99,995	101,078	98,933	99,856
	50	24	6	18	15.32	11.54	20.46	100,168	101,254	99,083	100,009
	51	26	8	18	15.32	10.54	19.46	100,271	101,360	99,174	100,102
	52	26	6	20	15.14	9.54	20.46	100,271	101,360	99,174	100,102
	53	28	8	20	15.14	8.54	19.46	100,323	101,414	99,220	100,149
	54	28	6	22	14.81	7.54	20.46	100,323	101,414	99,220	100,149
	55	30	8	22	14.81	6.54	19.46	100,341	101,433	99,236	100,166
	56	32	8	24	14.37	4.54	19.46	100,342	101,435	99,238	100,168

NOTE: # = sequence number
T = total number of strands
D = draped strands
S = straight strands

Section Properties

Beam Type 4 -- 7" Web

Section Area=	473.9	in^2
Section Y_b=	19.82	in
$I_{nontransformed}$=	100,400	in^4
Depth=	45	in
Strand Size=	½	in

Cont.								$I_{initial}$		I_{final}	
Span	#	T	D	S	E1D	E2D	E3D	(A1=#5)	(A1=#6)	(A1=#5)	(A1=#6)
Group	86	8	4	4	15.82	16.82	21.18	105,048	106,065	104,384	105,256
I	87	10	4	6	16.49	16.82	21.18	105,719	106,743	104,960	105,837
	88	12	4	8	16.32	16.82	21.18	106,242	107,272	105,410	106,291
	89	14	6	8	16.32	15.82	20.18	106,636	107,671	105,750	106,635
	90	16	6	10	16.22	15.82	20.18	107,151	108,192	106,193	107,083
	91	18	8	10	16.22	14.82	19.18	107,431	108,476	106,436	107,328
	92	20	8	12	15.82	14.82	19.18	107,815	108,866	106,768	107,664
	93	22	8	14	15.25	14.82	19.18	108,090	109,145	107,007	107,906
	94	24	8	16	15.57	12.82	19.18	108,275	109,334	107,168	108,070
	95	26	10	16	15.57	11.82	18.18	108,388	109,449	107,266	108,171
	96	28	10	18	15.60	9.82	18.18	108,446	109,510	107,318	108,224
Group	101	8	2	6	16.49	15.82	22.18	105,048	106,065	104,384	105,256
II	102	10	2	8	16.82	15.82	22.18	105,719	106,743	104,960	105,837
	103	12	4	8	16.32	16.82	21.18	106,242	107,272	105,410	106,291
	104	14	4	10	16.22	16.82	21.18	106,760	107,796	105,857	106,742
	105	16	6	10	16.22	15.82	20.18	107,151	108,192	106,193	107,083
	106	18	6	12	16.49	13.82	20.18	107,431	108,476	106,436	107,328
	107	20	6	14	16.11	13.82	20.18	107,815	108,866	106,768	107,664
	108	22	6	16	15.57	13.82	20.18	108,090	109,145	107,007	107,906
	109	24	6	18	15.60	11.82	20.18	108,275	109,334	107,168	108,070
	110	26	8	18	15.60	10.82	19.18	108,388	109,449	107,266	108,171
	111	28	8	20	15.42	8.82	19.18	108,446	109,510	107,318	108,224
	112	30	8	22	15.09	6.82	19.18	108,469	109,533	107,338	108,245
	113	32	8	24	14.65	4.82	19.18	108,472	109,537	107,341	108,248

NOTE: # = sequence number
T = total number of strands
D = draped strands
S = straight strands

Section Properties

Beam Type 4 -- 7" Web (continued)

Section Area=	473.9	in^2
Section Y_b=	19.82	in
$I_{nontransformed}$=	100,400	in^4
Depth=	45	in
Strand Size=	½	in

Simple								$I_{initial}$		I_{final}	
Span	#	T	D	S	E1D	E2D	E3D	(A1=#5)	(A1=#6)	(A1=#5)	(A1=#6)
Group	41	8	4	4	15.82	16.82	21.18	105,048	106,065	104,384	105,256
I	42	10	4	6	16.49	16.82	21.18	105,719	106,743	104,960	105,837
	43	12	4	8	16.32	16.82	21.18	106,242	107,272	105,410	106,291
	44	14	4	10	16.22	16.82	21.18	106,760	107,796	105,857	106,742
	45	16	6	10	16.22	15.82	20.18	107,151	108,192	106,193	107,083
	46	16	4	12	16.49	14.82	21.18	107,151	108,192	106,193	107,083
	47	18	6	12	16.49	13.82	20.18	107,431	108,476	106,436	107,328
	48	20	6	14	16.11	13.82	20.18	107,815	108,866	106,768	107,664
	49	22	6	16	15.57	13.82	20.18	108,090	109,145	107,007	107,906
	50	24	6	18	15.60	11.82	20.18	108,275	109,334	107,168	108,070
	51	26	8	18	15.60	10.82	19.18	108,388	109,449	107,266	108,171
	52	26	6	20	15.42	9.82	20.18	108,388	109,449	107,266	108,171
	53	28	8	20	15.42	8.82	19.18	108,446	109,510	107,318	108,224
	54	28	6	22	15.09	7.82	20.18	108,446	109,510	107,318	108,224
	55	30	8	22	15.09	6.82	19.18	108,469	109,533	107,338	108,245
	56	32	8	24	14.65	4.82	19.18	108,472	109,537	107,341	108,248

NOTE: # = sequence number
T = total number of strands
D = draped strands
S = straight strands

Section Properties

Beam Type 4 -- 8" Web

Section Area=	518.9	in^2
Section Y_b=	20.06	in
$I_{nontransformed}$=	108,288	in^4
Depth=	45	in
Strand Size=	½	in

Cont.								$I_{initial}$		I_{final}	
Span	#	T	D	S	E1D	E2D	E3D	(A1=#5)	(A1=#6)	(A1=#5)	(A1=#6)
Group	86	8	4	4	16.06	17.06	20.94	112,955	113,952	112,289	113,143
I	87	10	4	6	16.73	17.06	20.94	113,645	114,648	112,881	113,739
	88	12	4	8	16.56	17.06	20.94	114,185	115,193	113,345	114,208
	89	14	6	8	16.56	16.06	19.94	114,594	115,607	113,698	114,563
	90	16	6	10	16.46	16.06	19.94	115,126	116,144	114,156	115,026
	91	18	8	10	16.46	15.06	18.94	115,419	116,442	114,409	115,282
	92	20	8	12	16.06	15.06	18.94	115,818	116,846	114,755	115,631
	93	22	8	14	15.49	15.06	18.94	116,107	117,138	115,004	115,884
	94	24	8	16	15.81	13.06	18.94	116,303	117,337	115,175	116,057
	95	26	10	16	15.81	12.06	17.94	116,424	117,461	115,281	116,165
	96	28	10	18	15.84	10.06	17.94	116,489	117,528	115,338	116,223
Group	101	8	2	6	16.73	16.06	21.94	112,955	113,952	112,289	113,143
II	102	10	2	8	17.06	16.06	21.94	113,645	114,648	112,881	113,739
	103	12	4	8	16.56	17.06	20.94	114,185	115,193	113,345	114,208
	104	14	4	10	16.46	17.06	20.94	114,720	115,734	113,806	114,673
	105	16	6	10	16.46	16.06	19.94	115,126	116,144	114,156	115,026
	106	18	6	12	16.73	14.06	19.94	115,419	116,442	114,409	115,282
	107	20	6	14	16.35	14.06	19.94	115,818	116,846	114,755	115,631
	108	22	6	16	15.81	14.06	19.94	116,107	117,138	115,004	115,884
	109	24	6	18	15.84	12.06	19.94	116,303	117,337	115,175	116,057
	110	26	8	18	15.84	11.06	18.94	116,424	117,461	115,281	116,165
	111	28	8	20	15.66	9.06	18.94	116,489	117,528	115,338	116,223
	112	30	8	22	15.33	7.06	18.94	116,515	117,555	115,361	116,247
	113	32	8	24	14.89	5.06	18.94	116,520	117,560	115,366	116,252

NOTE: # = sequence number
T = total number of strands
D = draped strands
S = straight strands

Section Properties

Beam Type 4 -- 8" Web (continued)

Section Area=	518.9	in^2
Section Y_b=	20.06	in
$I_{nontransformed}$=	108,288	in^4
Depth=	45	in
Strand Size=	½	in

Simple								$I_{initial}$		I_{final}	
Span	#	T	D	S	E1D	E2D	E3D	(A1=#5)	(A1=#6)	(A1=#5)	(A1=#6)
Group	41	8	4	4	16.06	17.06	20.94	112,955	113,952	112,289	113,143
I	42	10	4	6	16.73	17.06	20.94	113,645	114,648	112,881	113,739
	43	12	4	8	16.56	17.06	20.94	114,185	115,193	113,345	114,208
	44	14	4	10	16.46	17.06	20.94	114,720	115,734	113,806	114,673
	45	16	6	10	16.46	16.06	19.94	115,126	116,144	114,156	115,026
	46	16	4	12	16.73	15.06	20.94	115,126	116,144	114,156	115,026
	47	18	6	12	16.73	14.06	19.94	115,419	116,442	114,409	115,282
	48	20	6	14	16.35	14.06	19.94	115,818	116,846	114,755	115,631
	49	22	6	16	15.81	14.06	19.94	116,107	117,138	115,004	115,884
	50	24	6	18	15.84	12.06	19.94	116,303	117,337	115,175	116,057
	51	26	8	18	15.84	11.06	18.94	116,424	117,461	115,281	116,165
	52	26	6	20	15.66	10.06	19.94	116,424	117,461	115,281	116,165
	53	28	8	20	15.66	9.06	18.94	116,489	117,528	115,338	116,223
	54	28	6	22	15.33	8.06	19.94	116,489	117,528	115,338	116,223
	55	30	8	22	15.33	7.06	18.94	116,515	117,555	115,361	116,247
	56	32	8	24	14.89	5.06	18.94	116,520	117,560	115,366	116,252

NOTE: # = sequence number
T = total number of strands
D = draped strands
S = straight strands

Section Properties

Beam Type 6 -- 6.5" Web

Section Area=	643.6	in^2
Section Y_b=	25.92	in
$I_{nontransformed}$=	235,735	in^4
Depth=	54	in
Strand Size=	½	in

Cont.								$I_{initial}$		I_{final}	
Span	#	T	D	S	E1D	E2D	E3D	(A1=#6)	(A1=#7)	(A1=#6)	(A1=#7)
Group	141	14	4	10	23.52	22.92	23.08	248,115	249,649	246,353	247,665
I	142	16	4	12	23.25	22.92	23.08	249,115	250,657	247,213	248,531
	143	18	6	12	23.25	21.92	22.08	249,933	251,482	247,918	249,241
	144	20	6	14	23.06	21.92	22.08	250,920	252,478	248,769	250,098
	145	22	6	16	22.92	21.92	22.08	251,901	253,467	249,616	250,951
	146	24	8	16	22.92	20.92	21.08	252,545	254,117	250,173	251,513
	147	26	8	18	22.59	20.92	21.08	253,342	254,921	250,862	252,207
	148	28	8	20	22.32	20.92	21.08	254,133	255,720	251,547	252,897
	149	30	10	20	22.32	19.92	20.08	254,626	256,218	251,975	253,330
	150	32	10	22	22.10	19.92	20.08	255,408	257,008	252,653	254,014
	151	34	10	24	21.75	19.92	20.08	256,032	257,638	253,195	254,560
	152	36	10	26	21.46	19.92	20.08	256,651	258,263	253,734	255,103
	153	38	12	26	21.46	18.92	19.08	257,011	258,628	254,048	255,421

NOTE: # = sequence number
T = total number of strands
D = draped strands
S = straight strands

Section Properties

Beam Type 6 -- 7.5" Web

Section Area=	697.6	in^2
Section Y_b=	26.00	in
$I_{nontransformed}$=	248,915	in^4
Depth=	54	in
Strand Size=	½	in

Cont.								$I_{initial}$		I_{final}	
Span	#	T	D	S	E1D	E2D	E3D	(A1=#6)	(A1=#7)	(A1=#6)	(A1=#7)
Group	141	14	4	10	23.60	23.00	23.00	261,329	262,852	259,561	260,864
I	142	16	4	12	23.33	23.00	23.00	262,338	263,868	260,429	261,737
	143	18	6	12	23.33	22.00	22.00	263,164	264,701	261,141	262,454
	144	20	6	14	23.14	22.00	22.00	264,162	265,707	262,001	263,319
	145	22	6	16	23.00	22.00	22.00	265,154	266,706	262,856	264,180
	146	24	8	16	23.00	21.00	21.00	265,807	267,365	263,421	264,749
	147	26	8	18	22.67	21.00	21.00	266,613	268,178	264,118	265,452
	148	28	8	20	22.40	21.00	21.00	267,415	268,987	264,812	266,150
	149	30	10	20	22.40	20.00	20.00	267,917	269,493	265,247	266,589
	150	32	10	22	22.18	20.00	20.00	268,710	270,294	265,935	267,282
	151	34	10	24	21.83	20.00	20.00	269,344	270,933	266,484	267,836
	152	36	10	26	21.54	20.00	20.00	269,973	271,569	267,031	268,387
	153	38	12	26	21.54	19.00	19.00	270,341	271,941	267,353	268,712

NOTE: # = sequence number
T = total number of strands
D = draped strands
S = straight strands

Section Properties

Beam Type 6 -- 8.5" Web

Section Area=	751.6	in^2
Section Y_b=	26.07	in
$I_{nontransformed}$=	262,087	in^4
Depth=	54	in
Strand Size=	½	in

Cont.								$I_{initial}$		I_{final}	
Span	#	T	D	S	E1D	E2D	E3D	(A1=#6)	(A1=#7)	(A1=#6)	(A1=#7)
Group	141	14	4	10	23.67	23.07	22.93	274,530	276,043	272,758	274,052
I	142	16	4	12	23.40	23.07	22.93	275,547	277,068	273,633	274,932
	143	18	6	12	23.40	22.07	21.93	276,382	277,908	274,352	275,656
	144	20	6	14	23.21	22.07	21.93	277,388	278,922	275,219	276,528
	145	22	6	16	23.07	22.07	21.93	278,389	279,930	276,082	277,396
	146	24	8	16	23.07	21.07	20.93	279,050	280,596	276,653	277,971
	147	26	8	18	22.74	21.07	20.93	279,866	281,418	277,357	278,680
	148	28	8	20	22.47	21.07	20.93	280,677	282,236	278,059	279,386
	149	30	10	20	22.47	20.07	19.93	281,186	282,750	278,500	279,831
	150	32	10	22	22.25	20.07	19.93	281,989	283,559	279,196	280,531
	151	34	10	24	21.90	20.07	19.93	282,632	284,207	279,753	281,093
	152	36	10	26	21.61	20.07	19.93	283,271	284,851	280,307	281,651
	153	38	12	26	21.61	19.07	18.93	283,645	285,230	280,634	281,981

NOTE: # = sequence number
T = total number of strands
D = draped strands
S = straight strands

Section Properties

Beam Type 7 -- 6" Web

Bulb Tee Girder

Section Area=	787.4	in^2
Section Y_b=	37.58	in
$I_{nontransformed}$=	571,047	in^4
Depth=	72.5	in
Strand Size=	½	in

Simple								$I_{initial}$ *		I_{final} *	
Span	#	T	D	S	E1D	E2D	E3D	(A1=#5)	(A1=#6)	(A1=#5)	(A1=#6)
Group	174	14	4	10	35.58	34.58	29.92	599,364	603,636	595,327	598,983
I	175	16	4	12	35.25	34.58	29.92	601,730	606,025	597,361	601,033
	176	18	6	12	35.25	33.58	28.92	603,809	608,125	599,150	602,838
	177	20	6	14	35.01	33.58	28.92	606,152	610,490	601,167	604,871
	178	22	6	16	34.83	33.58	28.92	608,482	612,843	603,174	606,895
	179	24	8	16	34.83	32.58	27.92	610,272	614,652	604,718	608,453
	180	26	8	18	34.69	32.58	27.92	612,580	616,981	606,708	610,459
	181	28	8	20	34.58	32.58	27.92	614,875	619,299	608,690	612,457
	182	30	10	20	34.58	31.58	26.92	616,398	620,839	610,007	613,788
	183	32	10	22	34.31	31.58	26.92	618,402	622,864	611,740	615,536
	184	34	10	24	34.08	31.58	26.92	620,395	624,878	613,466	617,276
	185	36	10	26	33.89	31.58	26.92	622,379	626,881	615,183	619,009
	186	38	10	28	33.58	31.58	26.92	624,101	628,622	616,677	620,517
	187	40	12	28	33.58	30.58	25.92	625,364	629,902	617,775	621,627

NOTE: # = sequence number
T = total number of strands
D = draped strands
S = straight strands

* Beam Types 2, 3, 4, and 6 use 2 - A1 bars; Bulb Tee Girders use 4 - A1 bars

MATERIALS **Design**

Concrete:

Prestressed Members = Class A1

f'c = 5000 psi f'c = 6000 psi n = 6 (Strength)

f'ci = 4000 psi f'ci = 4500 psi n = 8 (Deflection)
(For notations, refer to current AASHTO Specifications).

Deck Slab = Class B2

f'c = 4000 psi n = 8

Reinforcing Steel:

Mild Steel

fy = 60,000 psi (Refer to Missouri Standard
fs = 24,000 psi Specifications)

Prestress Steel

Refer to AASHTO M203 (ASTM A416) Grade 270 (✳) for uncoated seven-wire low relaxation strands, with exceptions as shown in the table below:

Nominal Diameter of Strands	inch	0.5
Nominal Area of Strands	sq. in.	0.1530
Minimum Ultimate Strength	lbs.	41,300
Maximum Prestress	lbs.	31,000

(✳) Grade 270 Which refers to the average ultimate strength = 270 ksi

The maximum prestress in the table represents about 75% of the ultimate strength.

The size of the strands to be used will be limited to $\frac{1}{2}''$ diameter. Strands will be draped where practical.

Note: Use of higher strength concrete (f'c = 6,000 psi) or larger strand size may be required in unusual situations. Consult Structural Project Manager.

ALLOWABLE CONCRETE STRESSES

Design

The following criteria is shown for clarity and is in accordance with AASHTO 9.15.

$f'c$ = 5,000 psi, $f'ci$ = 4,000 psi

A. Temporary stresses before losses except as noted:

Compression 0.6 $f'ci$ = 0.6 x 4,000 psi = 2448 psi (✳)

Tension
Precompressed tensile zone .....
No temporary allowable stresses are specified.
See paragraph "B" below.

In tension areas with no
bonded reinforcement..... $3\sqrt{f'ci} = 3\sqrt{4,000}$ = 190 psi

Where the calculated tensile stress exceeds this value, bonded reinforcement shall be provided to resist the total tension force in the concrete computed on the assumption of an uncracked section. The maximum tensile stress shall not exceed...

$7.5\sqrt{f'ci} = 7.5\sqrt{4,000}$ = 475 psi

B. Stresses at service loads after losses:

Compression..... 0.4 $f'c$ = 0.4 x 5,000 = 2,000 psi

Tension in the precompressed tensile zone .....

(a) For members with bonded reinf. (✳✳).. $6\sqrt{f'c} = 6\sqrt{5000}$ = 425 psi

(b) For members without bonded reinf.....= Zero

Tension in other areas
Tension in other area is limited by the allowable temporary stresses specified in "A" above

C. Cracking stress:

Modulus of rupture from tests or (for normal weight concrete)..

.....$7.5\sqrt{f'c} = 7.5\sqrt{5,000}$ = 530 psi

D. Negative moment stresses in girders made continuous after deadload of slab is in place:

Tension in negative moment reinforcement..... fy = 60,000 psi
fs = 24,000 psi

Compression in concrete at bottom of girder
(See paragraph no. 2, page 1.1-3 this section
and AASHTO 9.7.2)..... $f'c$ = 5,000 psi
fc = 0.6$f'c$

(✳) BR200 allows 2% overstress
(✳✳) Strands qualify if not debonded at ends.

Design

PRESTRESS LOSS (LOW RELAXATION)
AASHTO 9.16.2

fs = 270,000 psi, Grade 270 low relaxation strands
f'c = 5,000 psi
$f'c_i$ = 4,000 psi

$$\left[\frac{(SH) \quad (ES) \quad (CR_C) \quad (CR_S)}{6000 + \frac{Es}{Eci} fc + 8.5\ fc + (5000 - 0.1ES - 0.05(SH + CRc))}{fs_i}\right]$$

Reduce to : $$\frac{10{,}700 + \left(0.9\left(\frac{E_S}{Ec_i}\right) + 8.08\right) fc}{fsi}$$

SH = Shrinkage
ES = Elastic Strain
CR_C = Concrete Creep
CR_S = Steel Creep

CRc = 12 fcir - 7 fcds
CRc = 12 fc - 7/2 fc = 8.5fc (Approximate Estimate)

$Ec_i = 150^{1.5}\ 33\sqrt{f'ci}$, $ES = \frac{Es}{Ec_i} fcir = \frac{Es}{Ec_i} fc$ (Approximate Estimate)

fcir = Concrete stress at centroid of P/S steel at point considered due to P/S and dead load at release.
fc = fcir (Assume fcir = fc)
fc = 0.4(4,000) = 1,600 psi (Estimate average)
fcds = Concrete stress at centroid of P/S Steel (due to dead load) (Assume fcds = 1/2 fc)
fsi = Initial stress in P/S steel
fsi = 270,000 psi x 75% = 202,500 psi

$Eci = 150^{1.5}\ 33\sqrt{4{,}000} = 3{,}834{,}253.5$ psi
Es = 28,000,000 psi (AASHTO 9.16.2.1.)

$\frac{Es}{Ec_i} = 7.30$

$$\frac{10{,}700 + (0.9 \times 7.30 + 8.08)\ 1600}{202{,}500} = 16.9\%$$ (Total loss)

202.5 ksi x 16.9% = 34.22 ksi

Total loss due to all causes, except friction, is 34.22 ksi.
(Friction losses are applied to post-tensioned girder only.)
Use 8.84% for initial loss and 8.84% for final loss for design.

202.5 ksi x 8.84% = 17.90 ksi = initial loss
202.5 - 17.90 = 184.60 ksi
184.60 ksi x 8.84% = 16.32 ksi = final loss
17.90 + 16.32 = 34.22 ksi ≈ 34.22 ksi = 202.5 ksi x 16.9% = total loss

In the above design example, if tension exceeds AASHTO Specifications, (425 psi for 5,000 psi concrete) the girder will have to be modified to limit stress to 425 psi.

PRESTRESS LOSS (LOW RELAXATION) (CONT.) **Design**

$f'c = 6{,}000$ psi
$f'c_i = 4{,}500$ psi
Grade 270 low relaxation strands
$fc = 0.4(4{,}500) = 1{,}800$ psi (Estimated average)

$$Ec_i = 150^{1.5}\ 33\sqrt{f'ci} = 4{,}066.840 \text{ psi}$$

$$\frac{Es}{Ec} = \frac{28{,}000{,}000}{4{,}066{,}840} = 6.89$$

AASHTO 9.16.2.1.3: CRc =12fc - 7/2fc = 8.5fc (approximate estimate)

$$\left[\overset{(SH)}{6{,}000} + \overset{(ES)}{\frac{Es}{Ec_i}fc} \overset{(CR_c)}{+8.5f_c} \overset{(CR_s)}{+(5{,}000 - 0.1ES - 0.05(SH + CR_c))}\right]$$

Reduce to: $$\frac{10{,}700 + (0.9\left(\frac{Es}{Ec_i}\right) + 8.08)\ fc}{fsi}$$

$fc = 0.4(4{,}500) = 1{,}800$ psi (estimated average)

$$\frac{Es}{Ec_i} = 6.89$$

fsi = Initial stress in low relaxation strands stressed to 75% of ultimate (✳)
fsi = 270,000 psi x 75% = 202,500 psi

$$\frac{10{,}700 + (0.9\text{x}6.89 + 8.08)\text{x}1800}{202{,}500} = 18.0\%$$

202.50 ksi x 18.0% = 36.45 ksi = total loss except friction
Use 9.44% for initial loss and 9.44% for final loss.

202.50 ksi x 9.44% = 19.12 ksi = initial loss
202.5 - 19.12 = 183.38 ksi
183.38 ksi x 9.44% = 17.31 ksi = final loss
19.12 + 17.31 = 36.43 ksi ≈ 36.45 ksi = 202.5 ksi x 18.0% = total loss

P/s force initial = (183.38 ksi)(0.153 in.^{2}/strands)(no. of strands)
P/s force final = ((202.5 - 36.43) ksi)(0.153 in.^{2}/strand)(no. of strands)

(✳) Suggested by FHWA: when using 3/8″ Ø strands, max. fsi = 0.7 x 250 ksi or 0.7 x ultimate stress, whichever is smaller. Larger initial stresses will cause debonding.

Design

PRESTRESS LOSS (LOW RELAXATION) (CONT.)
PRESTRESS CONCRETE GIRDER FORMULAE
FOR STRESS CALCULATION

(-) Tension; (+) Compression

Temp. Stress

Allow Top $7.5\sqrt{f'ci} = 0.474$ ksi tension for $f'ci = 4{,}000$ psi
Bott. $0.6\ f'ci = 2.4$ ksi compression for $f'ci = 4{,}000$ psi

Temp. Top =

$$\frac{(1.0 - \text{initial loss})(P/S\ F)}{Ag} - \frac{(1.0 - \text{initial loss})(P/S\ F)(ECC_{nc})}{St_{nc}} + \frac{M_{Gdr}}{St_{nc}}$$

Temp. Bott. =

$$\frac{(1.0 - \text{initial loss})(P/S\ F)}{Ag} + \frac{(1.0 - \text{initial loss})(P/S\ F)(ECC_{nc})}{Sb_{nc}} - \frac{M_{Gdr}}{Sb_{nc}}$$

Design Load Stress

Allow Top $0.4\ f'c = 2.0$ ksi compression for $f'c = 5{,}000$ psi
Bott. $6.0\sqrt{f'c} = 0.424$ ksi tension for $f'c = 5{,}000$ psi

Top final =

$$\text{Temp. Top Stress} - \frac{(\text{Final loss})(P/S\ F)}{A_c} + \frac{(\text{Final loss})(P/S\ F)(ECC_c)}{St_c} + \frac{M_{Slb+Dph}}{St_{nc}} + \frac{M_{DLC}}{St_c} + \frac{M_{LL+I}}{St_c}$$

Bott. final =

$$\text{Temp. Bott. Stress} - \frac{(\text{Final loss})(P/S\ F)}{A_c} - \frac{(\text{Final loss})(P/S\ F)(ECC_c)}{Sb_c} - \frac{M_{Slb+Dph}}{Sb_{nc}} - \frac{M_{DLC}}{Sb_c} - \frac{M_{LL+I}}{Sb_c}$$

0.153 sq. in. = Area of one 1/2 inch strand
270 ksi = f's = Ult, Str. P/s strand
202.5 ksi = 0.75 (270) = Initial steel stress

0.0884 = 8.84% Initial loss - low relaxation
0.0884 = 8.84% Final loss - low relaxation
See Bridge Manual Section 3.55, page 1.12-1
4 Str. 2 Draped
202.5 (0.153) = 30.98 kips/Str. P/s force
6 Strands (30.98) = 185.90 P/s force

Ac	= Area Composite
Ag	= Area Girder
Ecc_c	= Eccentricity of prestress force of composite section
Ecc_{nc}	= Eccentricity of prestress force of non-composite section
M_{DLC}	= Composite dead load moment
M_{Gdr}	= Girder dead load moment
M_{LL+I}	= Live load + impact moment
$M_{Slb+Dph}$	= Slab + diaphragm moment
P/s F	= Prestress forces in girder
Sb_c	= Composite section modulus at bottom of girder
Sb_{nc}	= Non-composite section modulus at bottom of girder
St_c	= Composite section modulus at top of girder
St_{nc}	= Non-composite section modulus at top of girder

PRESTRESS CAMBER **Design**

Reference: Computer Program BR139B

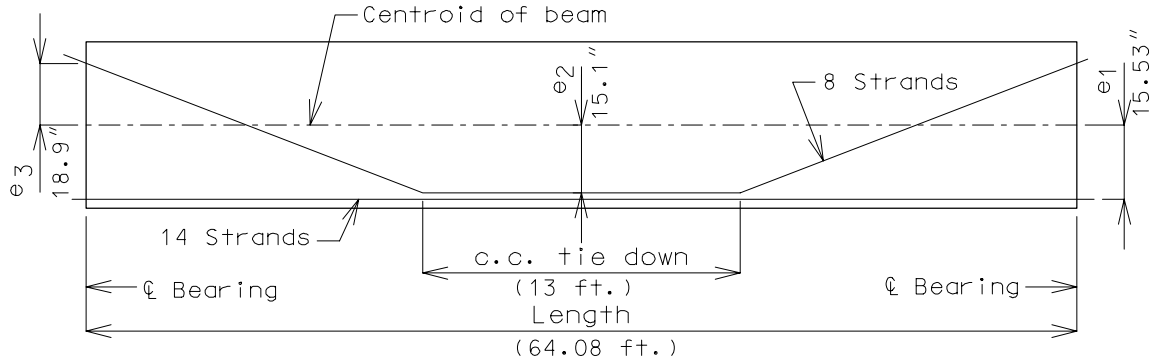

I4 = 107,888 in.^{4}
(non-transformed)
Beam wt. = 0.541 (k/ft.)

Used to resist uplift before beam is set on bent.

I4 =114,383 in.^{4}
(transformed)
Slab wt. = 0.92 (k/ft.)
Diaphragm wt. = 2.65 (k)

Used after beam is in place.

Mult. factor $[1 + (1-e^{-\varnothing})] = 1.77$

$F = 1.77$

$e = 2.718$

$\varnothing = \varepsilon \text{ creep} \times E_{28days}$

$E = 150^{1.5} \quad 33\sqrt{f'c}$

εcreep = (See page 3 PCA design of precast prestressed concrete girders. Use 40% factor based on creep at erection for 28 days.)

	Mult. Factor (F)	
	f'c = 5,000 psi	f'c = 6,000 psi
Beam Type 2	1.780	1.773
Beam Type 3	1.772	1.765
Beam Type 4	1.775	1.768
Beam Type 6	1.761	1.754

The following formulas are used to determine

Camber due initial strand stress (inch),
deflection due beam weight (inch),
camber due strands, beam weight and 28 day creep (inch),
camber L/4 due strands, beam weight and 28 day creep (inch),
deflection due to slab weight (inch),
camber centerline due strands, beam weight, 28 day creep, slab and diaphragm (inch), and
camber quarterpoint due strands, beam weight, 28 day creep, slab and diaphragm (inch).

PRESTRESS CAMBER (CONT.) **Design**

Formulas used:

Positive deflect up ▲

Negative deflect down ▼

$$\blacktriangle \triangle_1 = 144 \times 10^3 \times \left[\frac{F_{01}(e_1)(L^2)}{8E_i I} + \frac{F_{02}(e_2+e_3)}{E_i I}\left(\frac{L^2}{8} - \frac{a^2}{6}\right) - \frac{F_{02}(e_3)(L^2)}{8E_i I} \right]$$

$$\left(a = [L - (\text{℄ to ℄ tie downs})] \div 2\right) \text{ ft.}$$

Beam weight camber

$$\blacktriangledown \triangle_2 = \frac{5W_B(L^4)}{384E_i I}\ (1728 \times 10^3)$$

Slab weight camber

$$\blacktriangledown \triangle_s = \left[\frac{5W_S(L^4)}{384E_f I_{TR}} + \frac{P(L^3)}{48E_f I_{TR}} + \frac{2PsX(3L^2-4X^2)}{48E_f I_{TR}} \right](1728 \times 10^3)$$

Force straight strands (1/2″ low relaxation strands)

F_{01} = (no. of straight strands)x[31.0-(17.1 x 0.153)] kips

Force draped strands ($\frac{1}{2}$″ low relaxation strands)

F_{02} = (no. of draped strands)x[31.0-(17.1 x 0.153)] kips

270 ksi x 75% x (0.153 sq. in.) = 31 kips per strand
202.5 x (1-0.0884) = 184.6 ksi
184.6 x (1-0.0884) = 168.28 ksi
202.5 - 168.28 = 34.22 ksi = Total loss
Average loss = Total loss/2 = 34.22/2 = 17.1 ksi

e_1 = dist. centroid beam to centroid straight strand (in.)
e_2 = dist. centroid beam to low centroid draped at center of beam (in.)
e_3 = dist. centroid beam to up centroid draped at end of beam (in.)
L = length (ft.) (℄ bearing to ℄ bearing).
I = moment of inertia (in.^{4}) non-transformed.
I_{TR} = moment of inertia (in.^{4}) transformed.
Ps = concentrated loads due to variable slab thickness on each end.
X = dist. from ℄ brg. to Ps.
P = concentrated load due to diaphragm at center of span (kips)
W_B = uniform beam load (kips/ft.)
W_S = uniform slab load (kips/ft.)
F = factor for 28 day creep
E_i = modulus of elasticity corresponding to initial girder concrete strength
E_f = modulus of elasticity corresponding to final girder concrete strength

$$\triangle ℄ = F(\triangle_1 - \triangle_2) - \triangle s$$

$\triangle$ @ 0.10 = 0.314 ($\triangle$ @ ℄)
$\triangle$ @ 0.20 = 0.593 ($\triangle$ @ ℄)
$\triangle$ @ 0.25 = 0.7125 ($\triangle$ @ ℄)
$\triangle$ @ 0.30 = 0.813 ($\triangle$ @ ℄)
$\triangle$ @ 0.40 = 0.952 ($\triangle$ @ ℄)

Note: Compute and show on plans camber at $\frac{1}{4}$ points for bridges with spans less than 75′, 1/10 points for spans 75′ and over.

SUPERSTRUCTURE DESIGN **Design**

Live Load Distribution:

The live load distribution to girders may be assumed to be the same as the AASHTO distribution for concrete floors on steel I-Beam stringers. These factors may be found in section 1.3.

Ultimate Load Capacity:

The ultimate load capacity shall be not less than 1.3 times (the weight of the girder plus the weight of the slab and diaphragms plus the weight of the future wearing surface) plus 2.17 times the design live load plus impact.

Ultimate Strength:

The ultimate moment on a prestressed girder as determined in accordance with the ultimate load capacity indicated above, shall not be greater than the ultimate strength determined as follows:

Where $t \leqq 0.2d$

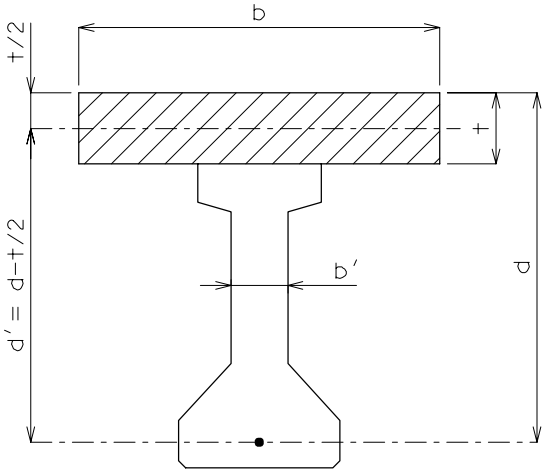

Where $t > 0.2d$

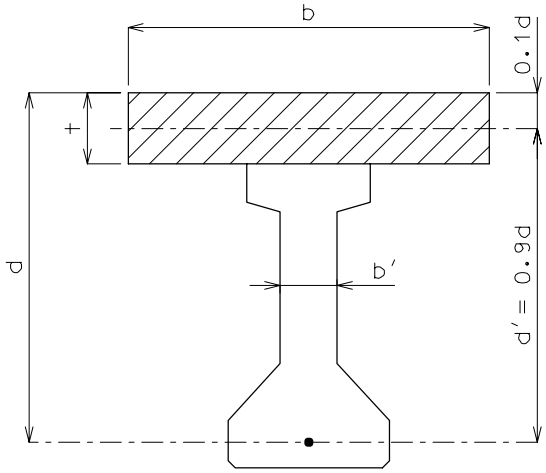

$$\left.\begin{array}{l} M_u = A_s f'_s \ (d-t/2) \\ \quad\text{or} \\ M_u = 0.85\ f'_c\ bt\ (d-t/2) \end{array}\right\} \text{Use the lesser in each case} \left\{\begin{array}{l} M_u = A_s f'_s \ (0.9d) \\ \quad\text{or} \\ M_u = 0.85\ f'_c\ b(0.2d)\ (0.9d) \end{array}\right.$$

Where: A_s = Area of p/s strands in bottom flange
b, b′, t and d = as shown above
f'_s = Ultimate strength of p/s strands
f'_c = Ultimate strength of slab concrete = 4,000 psi

Maximum Prestressing Steel Area:

$$As = \frac{0.85\ f'_c\ b\ t}{f's} \quad \text{When } t \leqq 0.2d$$

$$As = \frac{0.85\ f'_c\ b\ (0.2d)}{f's} \quad \text{When } t > 0.2d$$

In lieu of the above, AASHTO - Article 9.17 & 9.18 may be used.
(This is the method used by computer program BR200)

WEB REINFORCEMENT **Design**

(5″ Min. - 21″ Max. bar spacing for #4 bars)
(5″ Min. - 24″ Max. bar spacing for #5 bars)

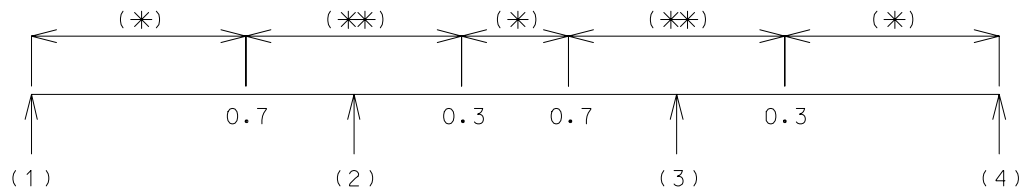

(✳) Prestressed concrete members shall be reinforced for diagonal tension stresses. Shear reinforcement shall be placed perpendicular to the axis of the member. The formula to be used to compute areas of web reinforcement is as follows:

$$A_V = \frac{(V_U - V_C)S}{2f_{sy}jd}; \text{ where } V_C = (0.06f'c)b'jd, \text{ but not more than } 180\ b'jd.$$

But shall not be less than $A_V = \frac{100\ b's}{60{,}000} = 0.00167\ b's$.

(✳✳) Since large moments and large shears occur in the same area of the girder near the interior supports, the AASHTO formula (AASHTO - 9.20 -Shear) for computing the area of web reinforcement has been modified. The formula to be used to compute areas of web reinforcement <u>near interior supports</u> is as follows:

$$A_V = \frac{(V_U - V_C)S}{f_{sy}jd}; \quad V_C = 180\ b'jd.$$

The value "jd" is the distance from the slab reinforcement to the center-of-gravity of the compression area under ultimate loads.

Use #4 shear reinforcement when possible. Alternate B1 bar will not work with #5. (See page 1.1-6A)

WEB REINFORCEMENT (CONT.) **Design**

ANCHORAGE ZONE REINFORCEMENT - AASHTO Article 9.21.3

The following detail meets the criteria for anchorage zone reinforcement for pretensioned girders (AASHTO Article 9.21.3) for all MoDOT standard girder shapes.

Standard P/S Girder End Section

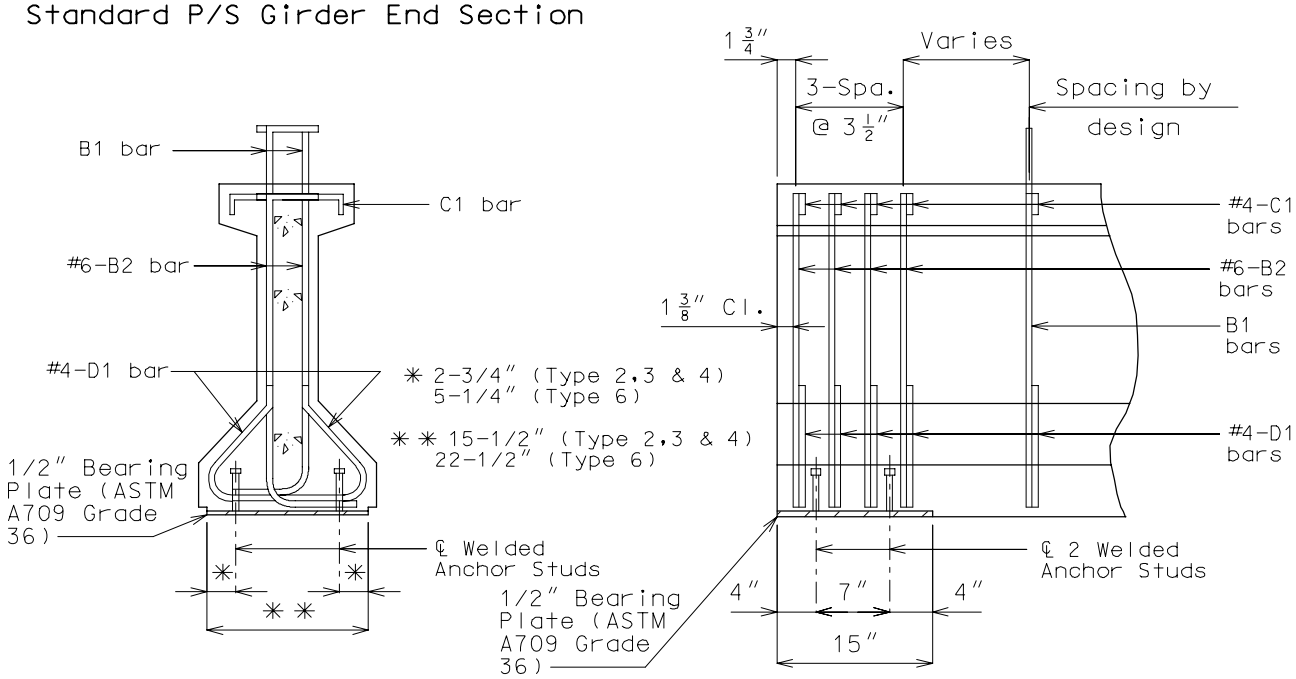

SOLE PLATE ANCHOR STUDS

The standard 1/2″ sole plate will be anchored with four 1/2″ x 4″ studs.

Studs shall be designed to meet the criteria of AASHTO Div. I-A in Seismic Performance Category C or D.

Stud capacity is determined as follows:

Stud Cap. = (n)(As)(0.4Fy)(1.5)

where: n = no. of studs
As = area of stud
Fy = yield strength of stud (50 ksi)
0.4Fy = Allowable Shear in Pins AASHTO Table 10.32.1A
1.5 = seismic overload factor

If required, increase the number of 1/2″ studs to six and space between open B2 bars. If this is still not adequate, 5/8″ studs may be used. The following table may be used as a guide to upper limits of dead load reactions:

Seismic Bearing Plate Anchor Design

No. of Studs	Stud Dia.	Max. Allowable D.L. Reaction (Kips)	
		A = 0.30	A = 0.36
4	1/2″	78	65
6	1/2″	117	98
4	5/8″	122	102
6	5/8″	184	153

The minimum 3/16″ fillet weld between the 1/2″ bearing plate and 1-1/2″ sole plate is adequate for all cases.

Detensioning

In all detensioning operations the prestressing forces must be kept symmetrical about the vertical axis of the member and must be applied in such a manner as to prevent any sudden or shock loading.

General Information

Splicing:

One approved splice per pretensioning strand will be permitted provided the splices are so positioned that none occur within a member. Strands which are being spliced shall have the same "Twist" or "Lay". Allowance shall be made for slippage of the splice in computing strand elongation.

Wire failure:

Failure of one wire in a seven wire pretensioning strand may be accepted, provided that, it is not more than two percent of the total area of the strands.

Sand Blasting:

On structures where it is questionable as to the clarity of areas to be sandblasted: show limits of sandblasted area in a plan view of details on girder ends (bent sheet). However, generally, sandblasting is covered by Missouri Standard Specification 705.4.14.

DIMENSIONAL TOLERANCES (✳) **Design**

Note: The following dimensional tolerances will be required.

Length of beam	± 1/8 inch per 10 feet of beam length, but not greater than 3/4 inch
Width (flanges, web and fillets)	+ 3/8 inch, - 1/4 inch
Depth (flanges, web and fillets)	± 1/4 inch
Depth (overall)	+ 1/2 inch, - 1/4 inch
Horizontal alignment (deviation from a straight line parallel to centerline of member)	1/2 inch max., to 40 feet lengths 3/4 inch max., 40 to 60 feet lengths 1 inch max., 60 feet or greater lengths
Camber (deviation from design camber within 7 days of strand release)	± 1/2 inch to 80 feet length, ± 1 inch greater than 80 feet length
Stirrup bars (projection above top of beam)	± 3/4 inch
Stirrup bars (longitudinal spacing)	± 2 inches
Tendon position	± 1/4 inch center of gravity of strand group and individual tendons
Position of deflection points for deflected strands	± 6 inches, longitudinal
Position of lifting devices	± 6 inches, longitudinal
Side inserts (centerline to centerline and centerline to end)	± 1/2 inch
Coil Inserts (Centerline to centerline and centerline to end)	± 2 inches horizontal, except must be 3 inches or more from end of beam and within reinforcement cage of bent, ±1 inch vertical
Slab Drain Inserts	± 1/2 inch from designated location, engineer may approve location ± 6 inches from design, multiple inserts for single drain must be within ± 1/2 inch of vertical line
Exposed beam ends (deviation from square or designated skew)	Horizontal ± 1/4 inch, vertical ± 1/8 inch per foot of beam height
Bearing area (deviation from plane)	± 1/8 inch
Bearing plates (centerline to centerline)	± 1/8 inch per 10 feet of beam length, but not greater than 3/4 inch
Bearing plates (centerline to end of beam)	± 1/2 inch
Diaphragm Hole Location	±1-1/2 inches for centerline of group ±1/2 inch within group

✳ Also see Section 705.5 of Missouri Standard Specifications.

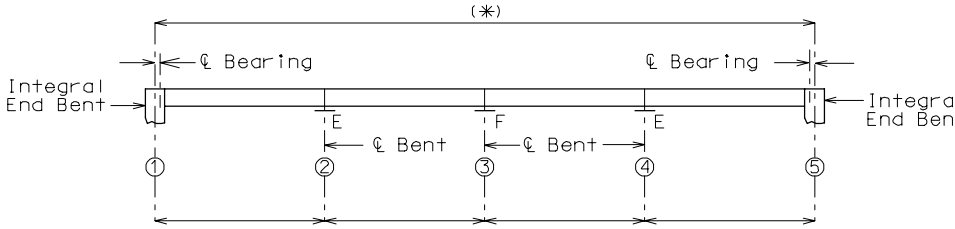

(✳) Maximum length from End Bent to End Bent = 600 feet.

TYPICAL CONTINUOUS PRESTRESS STRUCTURE
(INTEGRAL END BENTS)

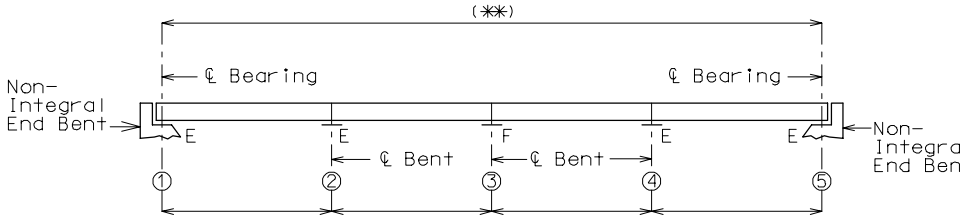

(✳✳) Maximum length from End Bent to End Bent = 800 feet.

TYPICAL CONTINUOUS PRESTRESS STRUCTURE
(NON-INTEGRAL END BENTS)

Haunching and Girder Steps

Haunching for a P/S I-Girder bridge is the distance between the top of the girder and the bottom of the slab.

Haunching shall be computed at quarter (1/4) points for bridges with spans less than 75 feet, and at tenth (1/10) points for spans 75 feet and longer. A haunching diagram, as shown below, shall be provided on all P/S I-Girder bridges.

A minimum haunch of 1 inch at the centerline of girder and 1/2 inch at the edge of the girder shall be provided to allow for construction tolerances and normal concrete variations.

A maximum haunch at the centerline of the girder of 2-1/2 inches is allowed when prestressed panels are used, and 3-1/2 inches when only the cast in place option is used. (The maximum joint filler thickness supporting panels is 2"; the remaining haunch thickness will be addressed by varying the slab thickness)

When haunches greater than 2-1/2 inches occur with prestressed panels, steps shall be provided on the girder, as shown on the following page, to keep the haunch between 1 and 2 inches. The minimum step height shall be 1/2 inch with 1/2 inch increments with no limit to the number of steps. If the steps accumulate to 1" or more, adjust the height of the B1 bars in 1 inch increments

Tops of girders, for bridges with superelevations of more than 2 percent, shall be sloped across the top flange to match the superelevation, as shown on the following sheet. The minimum thickness of the top flange shall be the

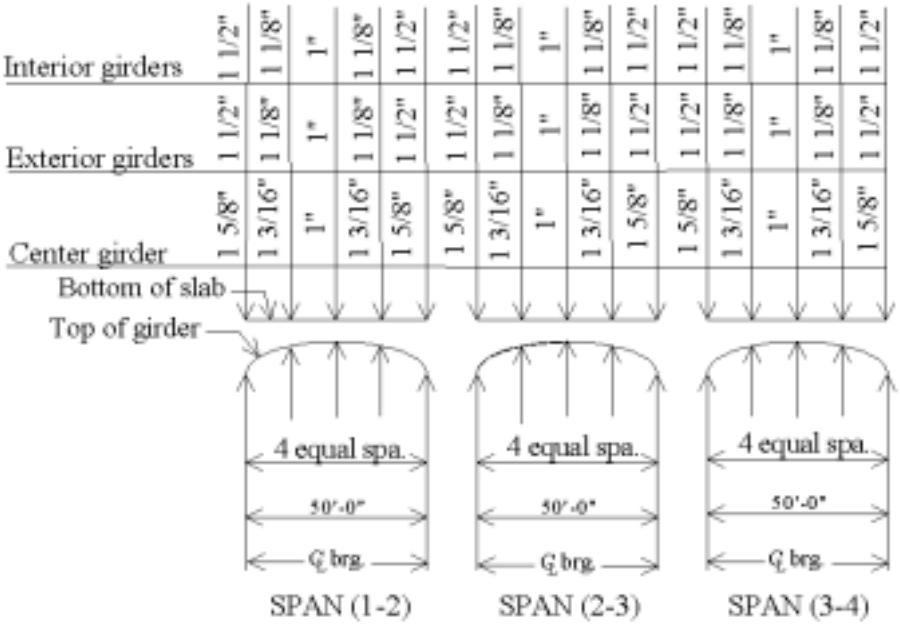

Theoretical Slab Haunching Diagram Example

standard flange thickness and the overall height at the minimum point shall be the standard girder height.

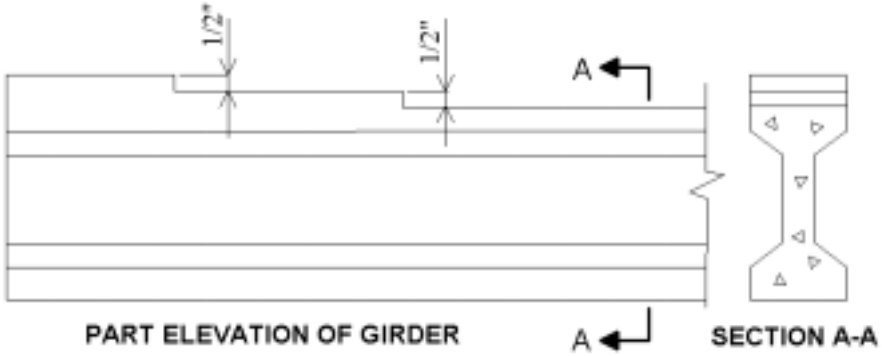

Top Flange Step Example

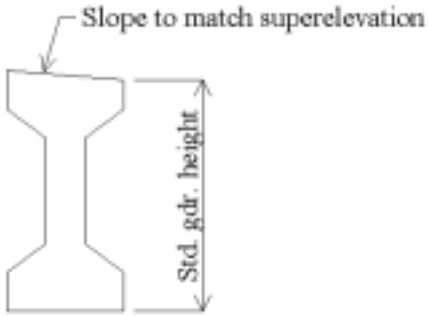

Sloped Top Flange Example

Beam Lengths and Geometric Layout

Tangent Bridges

Beam lengths for end spans of tangent bridges shall be computed using the requirements shown on the following sheet and, if possible, shall be the same length as girders in intermediate spans of equal length as specified on the Design Layout.

Beam Lengths for intermediate spans shall be computed using the requirements shown on the following sheet.

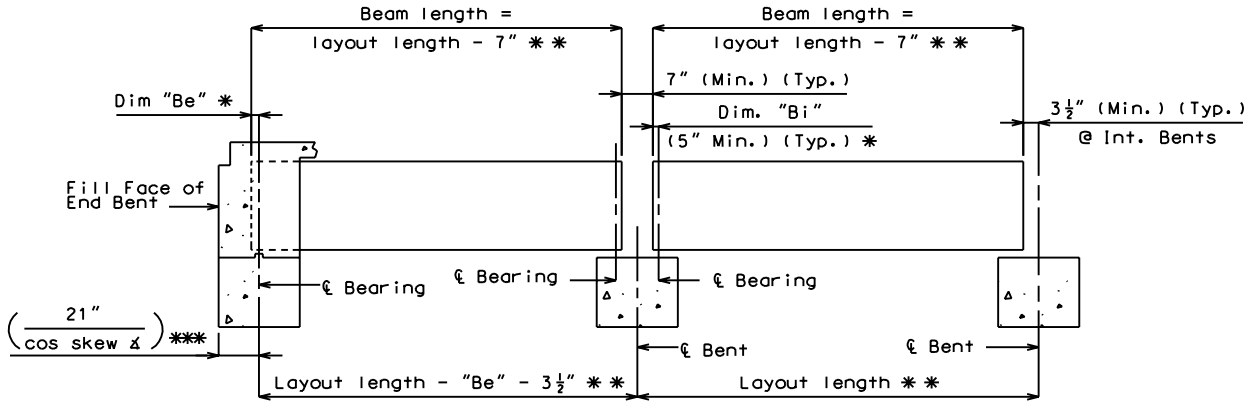

Integral End Bents

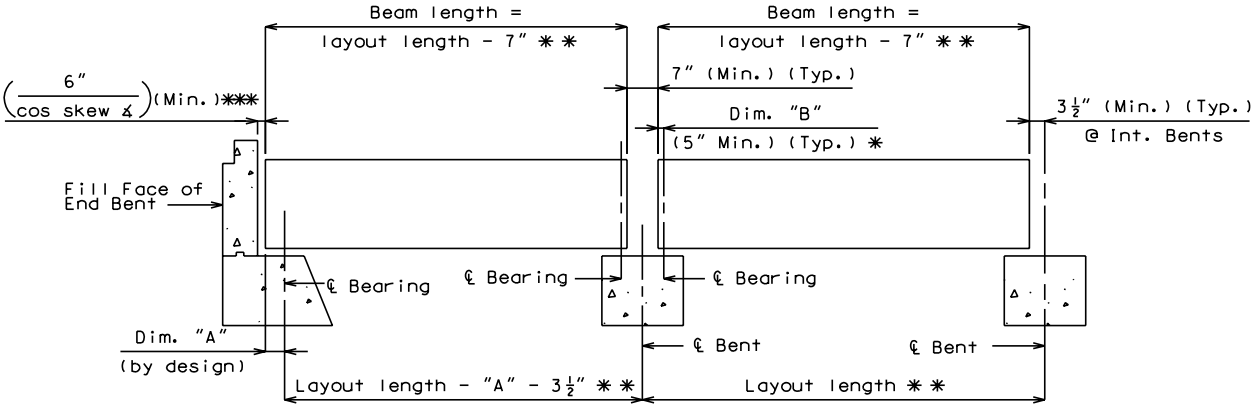

Non-Integral End Bents

Note: Formulas assume same size bearing pads at end bent and intermediate bents.

*** Minimum dimension from edge of bearing pad to end of girder equals one inch.***

**** Design layout lengths are horizontal lengths. Girder lengths should be adjusted according to grade and shall be specified to the nearest 1/8 inch.***

***** For large skews, end bent beam caps may need to be larger to provide edge distance.***

****** See Sections 3.30 and 3.35 to determine this dimension.***

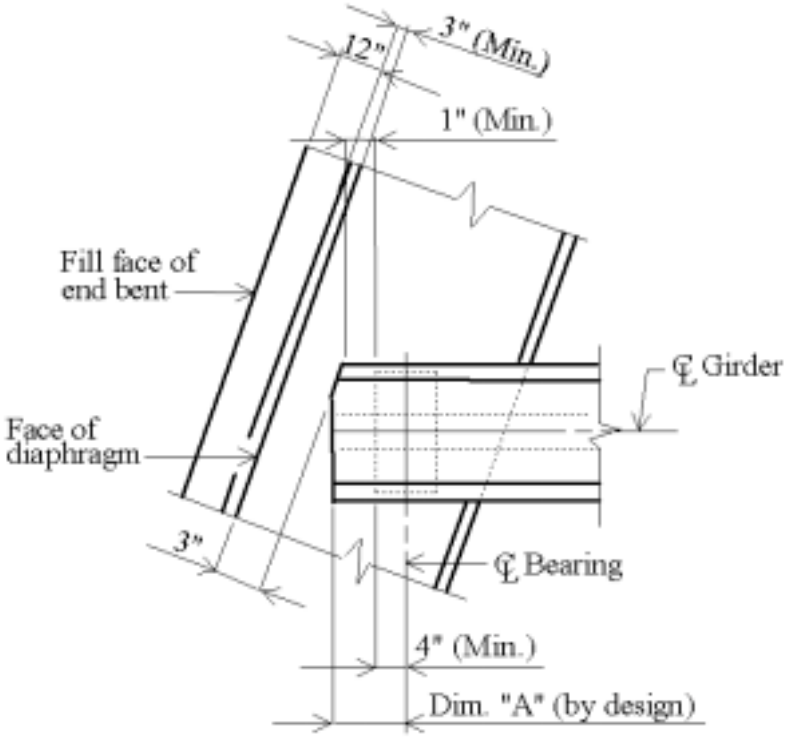

Part Plan Showing Coping Detail

Note: Non-Integral end bents with skews greater than 40 degrees shall always have girder ends coped. Skews less than 40 degrees shall have girder ends coped on case by case basis. It is preferable to not cope across the web.

Curved Bridges

Layout of any curved structure will have to be done using the coordinate geometry programs available at the time. To layout the bridge, the steps are as follows:

1 Start out by laying in the centerline (CL) of the survey curve.
2 Locate the tie point of the bridge. This point will usually be on the CL of the survey curve but may be on a baseline which is offset a certain distance to the CL of the survey curve.
3 A second tie point may be required if the skew is not measured to the CL of roadway at the bridge tie point. If this is the case, establish the tie point at the specified station and plot the skew line at the required angle.
4 Next, on the centerline of structure or baseline curve, locate the station of the CL of bent for each intermediate bent and the fill face for the end bents. Once these points are located, plot lines through these stations parallel to skew line. Normally the layout file will specify that all bents are parallel to the skew line, however, there may be times when the bents are radial or have varying skews.

5 When locating the stations in the preceding step, the distance between CL of intermediate bents are exactly the layout lengths specified on the file. The end spans however need to follow the procedure for calculating length set forth in this Section. If the layout length of the end span is the same as the intermediate spans, the length of the end span should be adjusted so that the girder lengths are, if possible, equal to intermediate spans with the same layout length.

6 When the CL of the intermediate bents and the fill face lines have been added, chords should be drawn connecting these points sequentially. For example if you have a three span bridge, chords should be drawn from the fill face of bent 1 to CL of bent 2, CL bent 2 to CL bent 3, and CL bent 3 to fill face bent 4.

7 When all the chords are in, offset each girder in each span parallel to this chord. The perpendicular distance between girders will be the same for all spans, but the skew distance between girders along the bent will vary from bent to bent depending on the skew to the CL at that point. The designer needs to be aware of the fact that at an intermediate bent the distance between bearings on the approaching and leaving span sides will be different distances. These bearings will not line up across the bent and will actually diverge more the farther away they are from the CL of the survey.

8 When establishing the CL of bearing points, the designer needs to allow for a minimum of seven (7) inches between ends of girders at the bents while keeping in mind that the girders will be offset and at different skews. If the offset is greater than half the girder flange width, see the Chief Structural Designer. The distance from the end of girder to CL of bearing point should be half of the bearing length plus one inch minimum clearance. Once the distance for CL bent to CL of bearing is calculated, the designer should offset lines by that dimension on either side of the CL of bent. These lines will then be intersected with each of the girder lines to create the bearing points on each bent.

9 Between the bearing points at the ends of the girders, quarter points or tenth points need to be established, depending on the girder span. These points will be used in calculating the haunch and bottom of slab elevations for the bridge deck.

10 The bridge deck and barrier curbs can be laid in by offsetting the CL of roadway to each side by the proper distance. Curves should be laid in to designate both the inside and outside edges of the barrier curb. These will later be useful in laying in the wings and end bents.

11 After the outside edge of slab curves are plotted, the curve offsets need to be found. The intersection point of the outside edge of slab and the CL of each bent or fill face can be connected with chords. The distance between these chords and their partner curves need to be calculated at five feet intervals beginning at the center point of each chord. (Section 2.4)

12 Joints are placed in the barrier curb at each bent. These joints are placed perpendicular to the CL of the roadway thru the intersection point of the CL bent and the inside of barrier curb.

13 Wing layout length is given on the profile sheets in the layout file. An arc should be struck so as to intersect the inside of barrier curb the specified length from a point at the intersection of the fill face and the inside of barrier curb. This point will mark the end of the wing which is perpendicular to the CL of the roadway.

The vertical curve information needs to be added so the program can calculate the elevations at the desired stations. After this is done, the designer can request any of the following information which will be needed:

Stations and elevations of all points
Offset distances to the chords
Lengths of girders
Distances between bearings
Angles between girders and each bent
Lengths of bents
Lengths of barrier curbs between joints
Minimum vertical clearance (Must lay in lower roadway)

Details

OPEN INTERMEDIATE DIAPHRAGMS
EXPANSION INTERMEDIATE BENT WITH CONTINUOUS SLAB
DIMENSIONS:

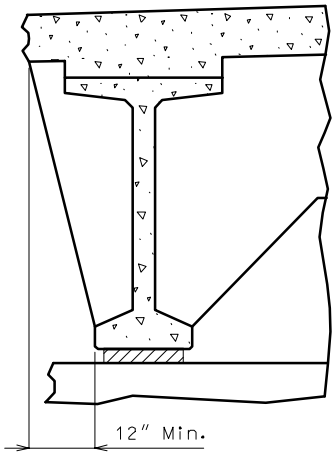

PART ELEVATION
FOR BULB TEE GIRDERS

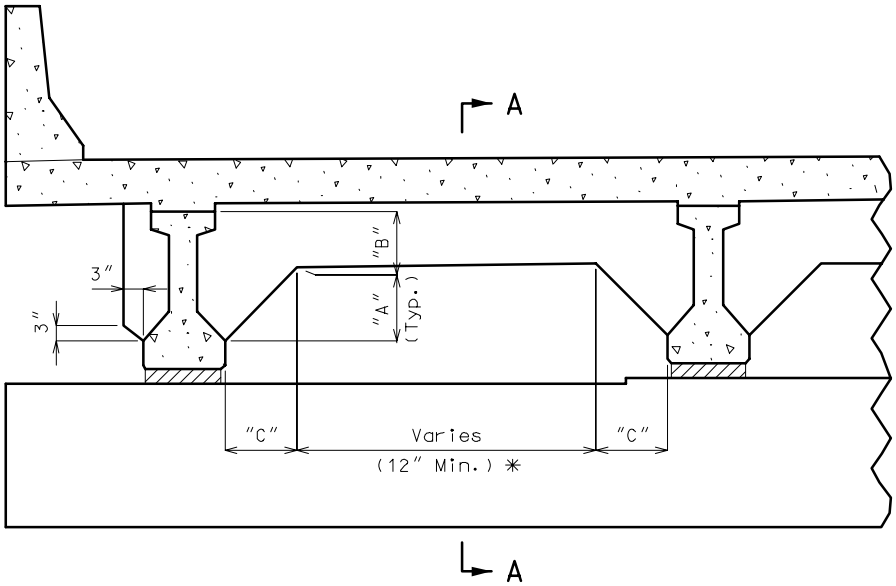

PART ELEVATION

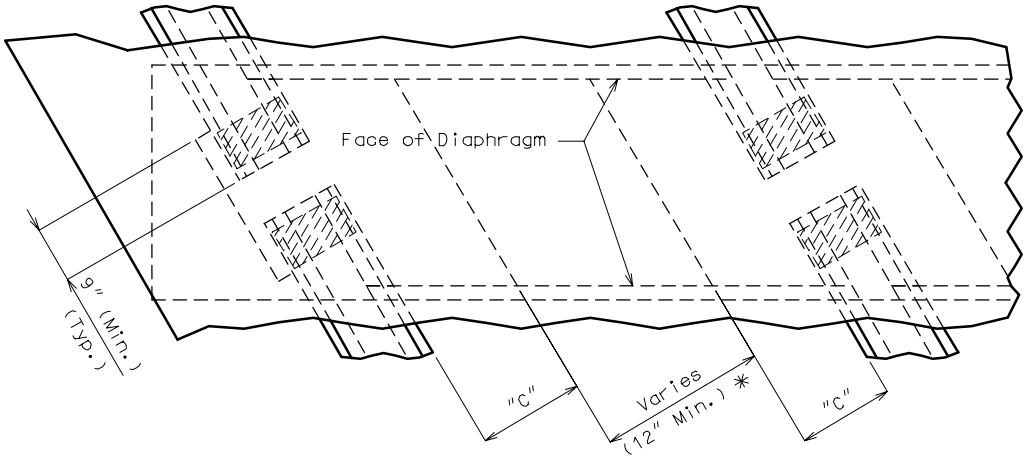

PART PLAN

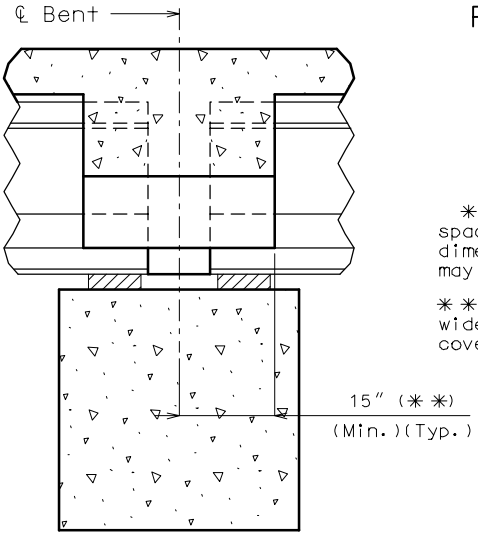

PART SECTION A-A

NOTE: For Seismic Performance Category (SPC) A provide slotted sole plates for longitudinal temperature movement. For SPC B, C and D provide slotted sole plates for longitudinal temperature plus earthquake movements. Anchor bolts shall be designed according to Section 1.2 Page 7.16.

✳ For Bulb Tee Girder spacings less than 8'-8" dimensions "A", "B" & "C" may have to be modified.

✳✳ Make sure the Diaphragm is wide enough to provide enough cover for the Coil Tie Rods.

GIRDER TYPE	DIMENSIONS		
	"A"	"B"	"C"
TYPE "2" 2'-8"	12"	15"	13"
TYPE "3" 3'-3"	17"	15"	19"
TYPE "4" 3'-9"	19"	18"	21"
TYPE "6" 4'-6"	2'-3"	21"	2'-1"
BULB TEE 6'-0½" ✳	3'-0"	2'-6½"	2'-9"

OPEN INTERMEDIATE DIAPHRAGMS
EXPANSION INTERMEDIATE BENT WITH CONTINUOUS SLAB
COIL TIE RODS:

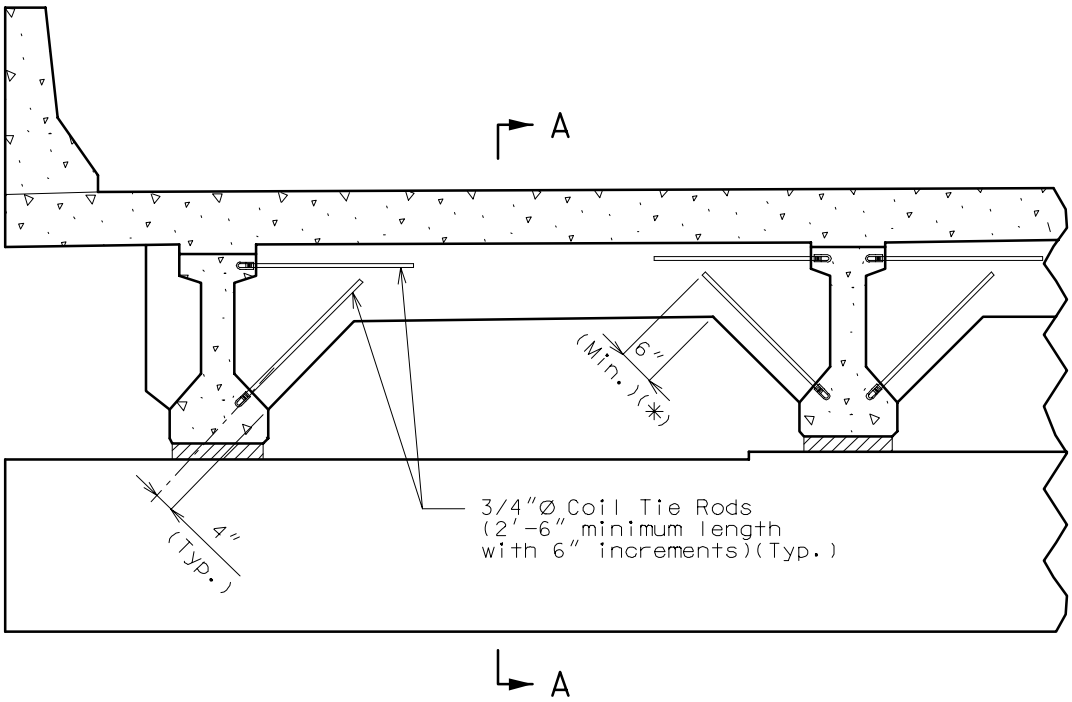

PART ELEVATION

NOTE: For location of the Coil Tie Rods in a plan view. See this Bridge Manual Section.

(✳) 6″ (Min.) shall be used for all I-Girders and Bulb Tee Girders.

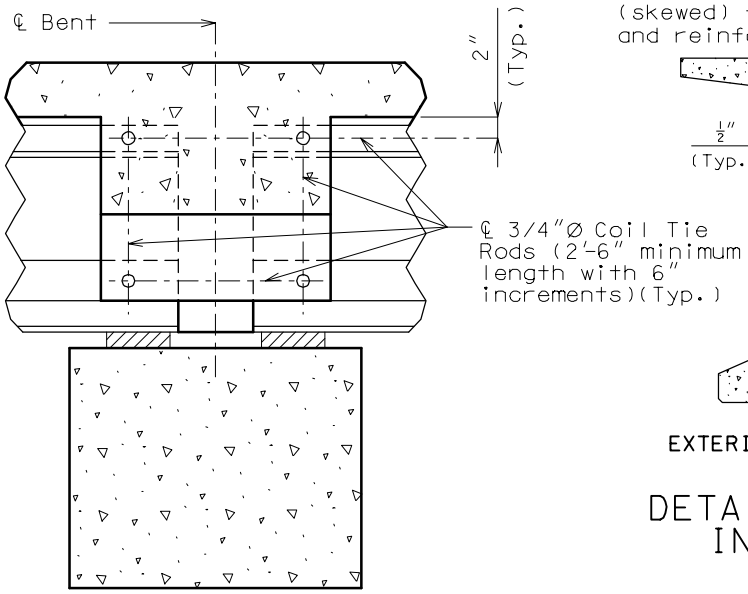

PART SECTION A-A

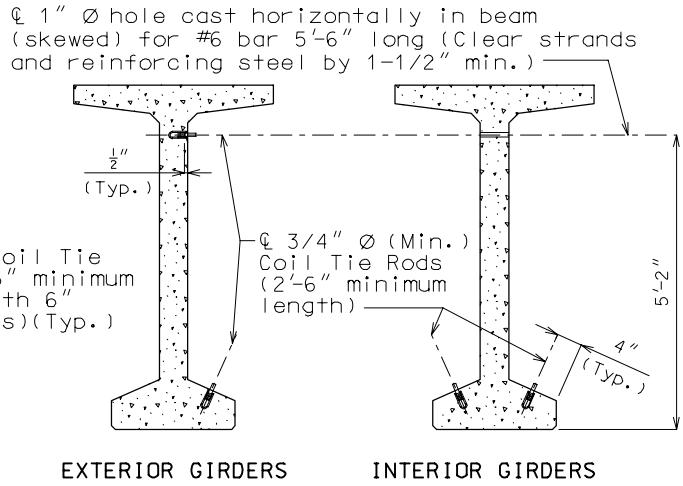

DETAILS OF COIL TIE RODS IN BULB TEE GIRDERS

Details

OPEN INTERMEDIATE DIAPHRAGMS
EXPANSION INTERMEDIATE BENT WITH CONTINUOUS SLAB
REINFORCEMENT:

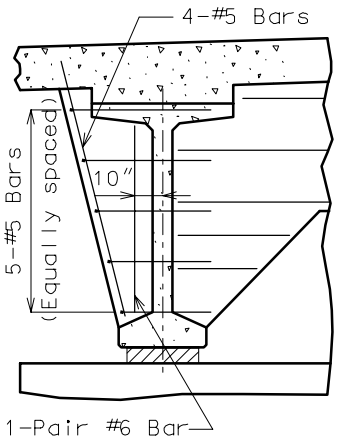

PART ELEVATION FOR
BULB TEE GIRDERS

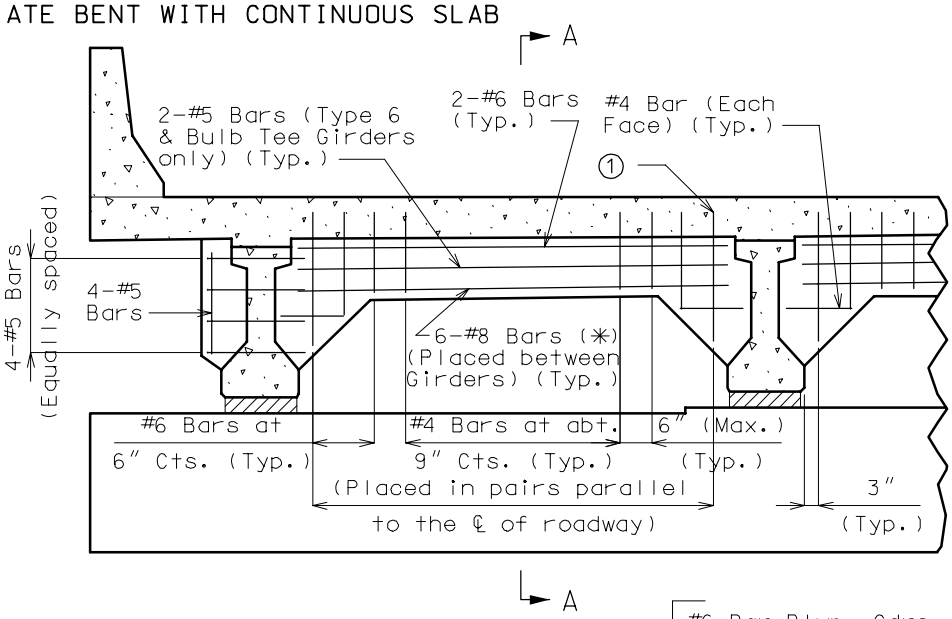

PART ELEVATION

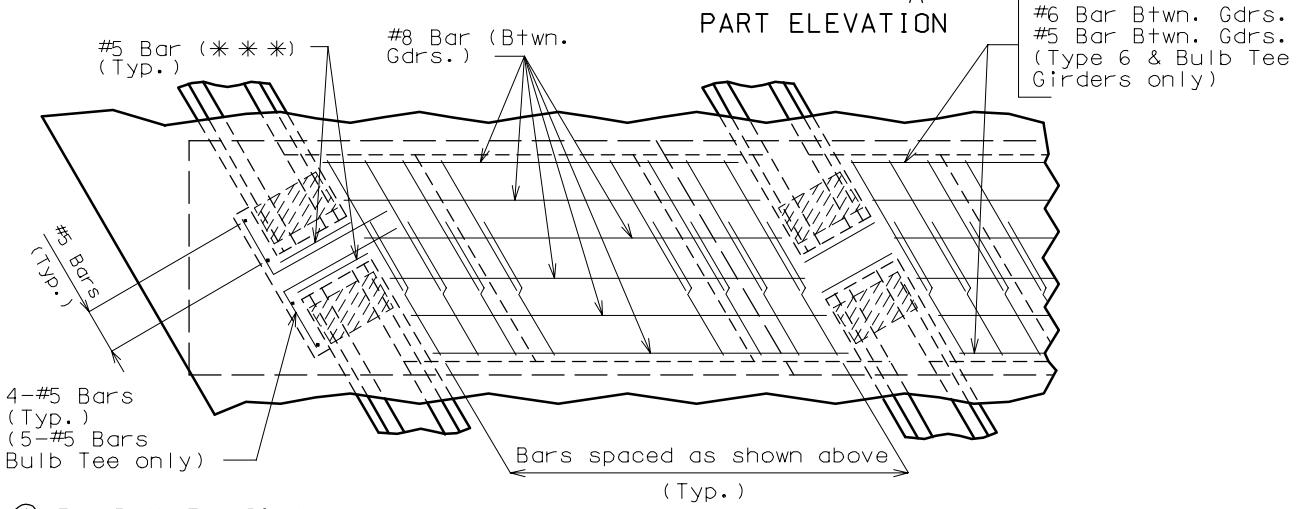

① For Bulb Tee Girders the first #6 Bar shall be placed 10" from the ℄ of Web (Top Flange will prevent some Bars from extending into the Slab).

PART PLAN

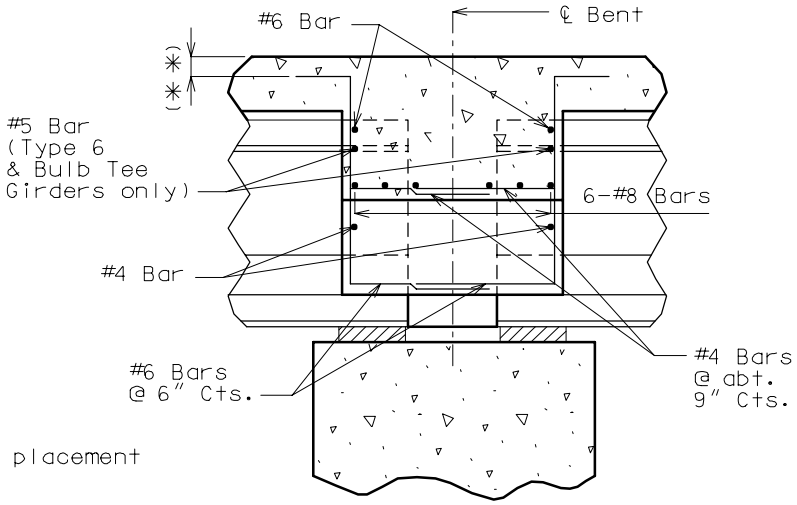

(✳) See Detail "A" for the placement of reinforcement.

(✳✳) Use the same clearance as longitudinal slab steel.

(✳✳✳) #5 Bars for each layer of bent up strands.

PART SECTION A-A

CLOSED INTERMEDIATE DIAPHRAGMS
FIXED INTERMEDIATE BENTS:

Details

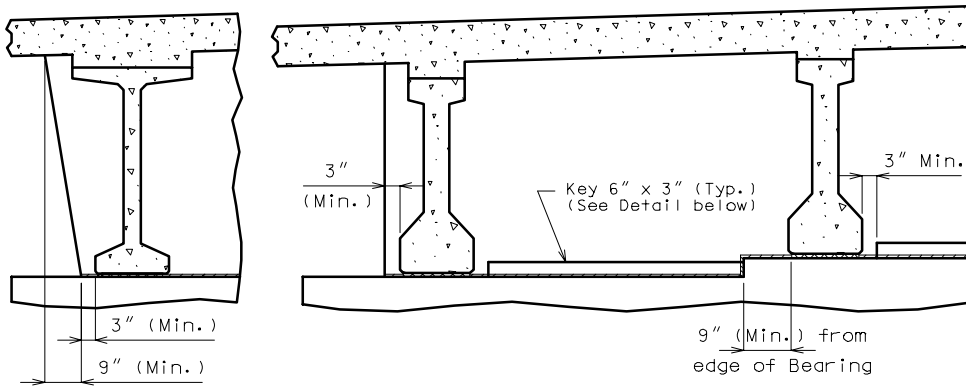

PART ELEVATION FOR BULB TEE GIRDERS

PART ELEVATION

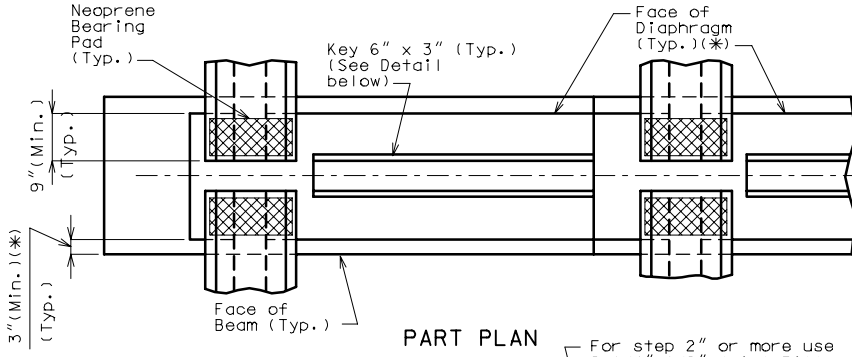

PART PLAN

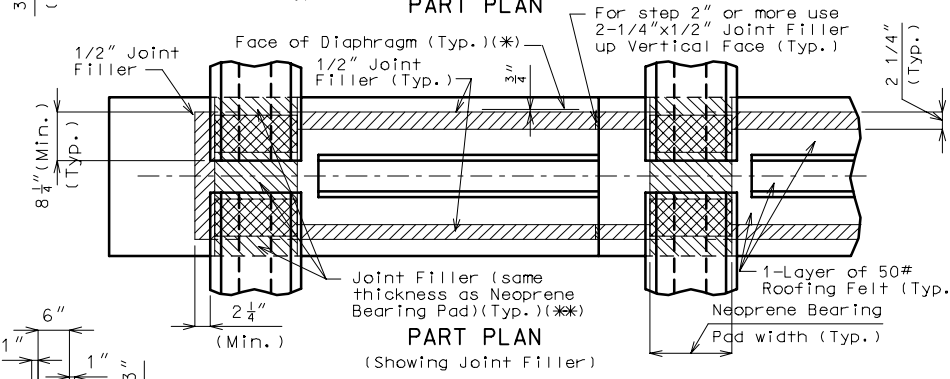

PART PLAN
(Showing Joint Filler)

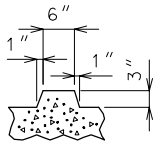

DETAIL OF KEY

(✳) Make flush with Bent Caps less than 3'-0" wide. For Bent Caps 3'-0" and over, make Diaphragms 2'-6" wide unless skew requires wider Diaphragms to accommodate Coil Ties.

(✳✳) For tapered bearings or for bearings with different thickness use the following note: "Fill area under girders with Joint Filler."

CLOSED INTERMEDIATE DIAPHRAGMS
EXPANSION INTERMEDIATE BENT:

Details

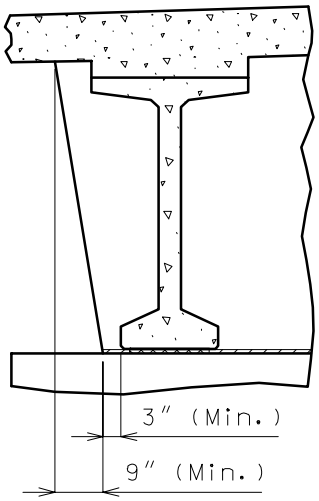

PART ELEVATION FOR BULB TEE GIRDERS

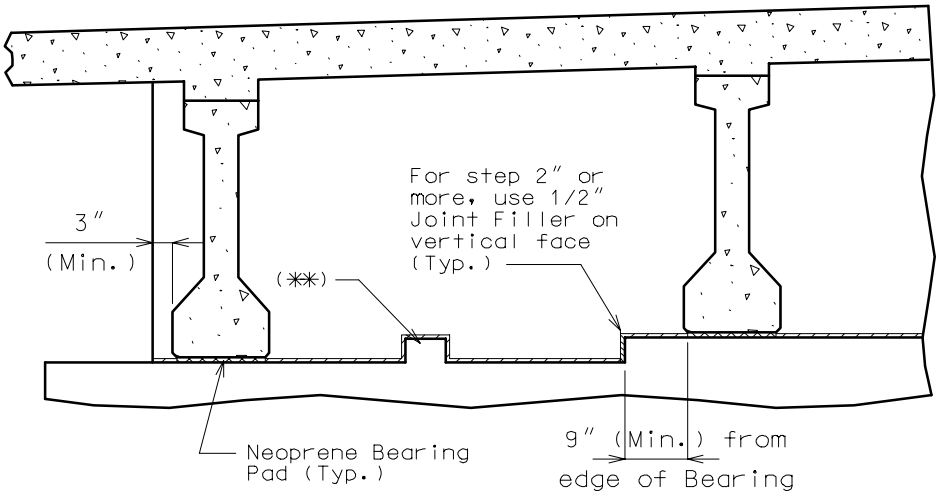

PART ELEVATION

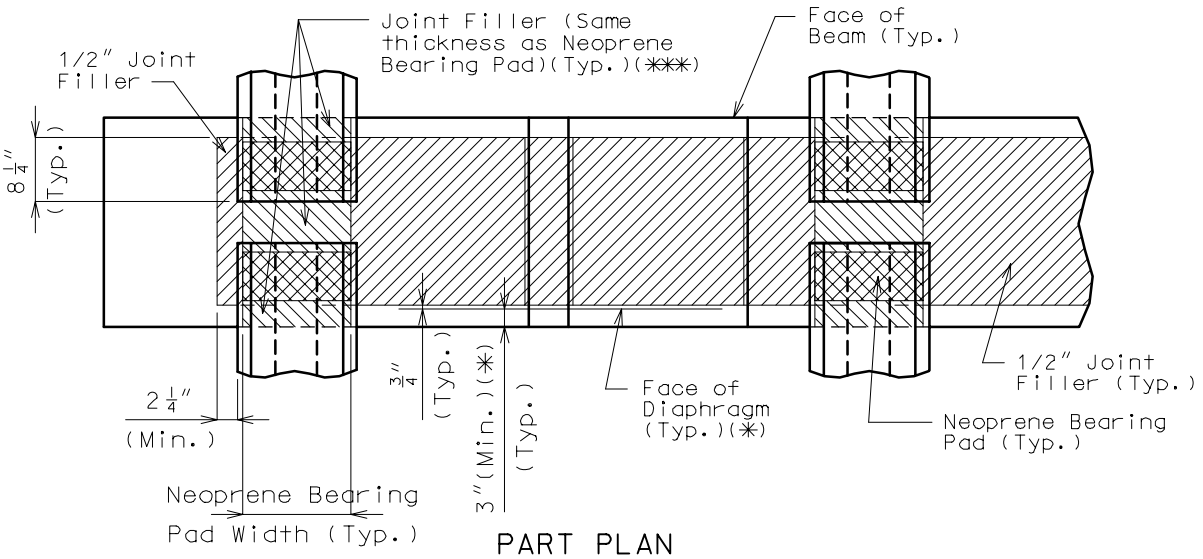

PART PLAN

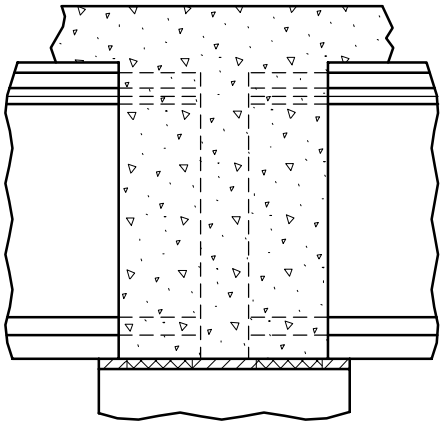

PART LONGITUDINAL ELEVATION

(✱) Make flush with Bent Caps up to 3′-0″ wide. For Bent Caps 3′-0″ and over, make Diaphragm 2′-6″ wide unless skew requires wider Diaphragm to accommodate Coil Ties.

(✱✱) Use Shear Blocks when Bent Cap steps down in one direction or when there are less than two steps in each direction with maximum step height less than 1-1/2″ each.

Shear Blocks shall be detailed parallel to the centerline of roadway and shall be designed to resist 0.20 times the tributary weight where tributary weight is defined as the total bent dead load reaction (AASHTO 5.2). See this Section Page 4.1-2 for design method.

(✱✱✱) For tapered bearings or for bearings with different thickness use the following note: "Fill area under girders with Joint Filler."

CLOSED INTERMEDIATE DIAPHRAGMS
FIXED AND EXPANSION INTERMEDIATE BENTS:
REINFORCEMENT (SQUARE STRUCTURE)

Details

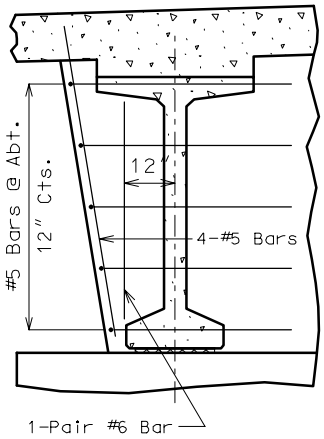

PART ELEVATION FOR BULB TEE GIRDERS

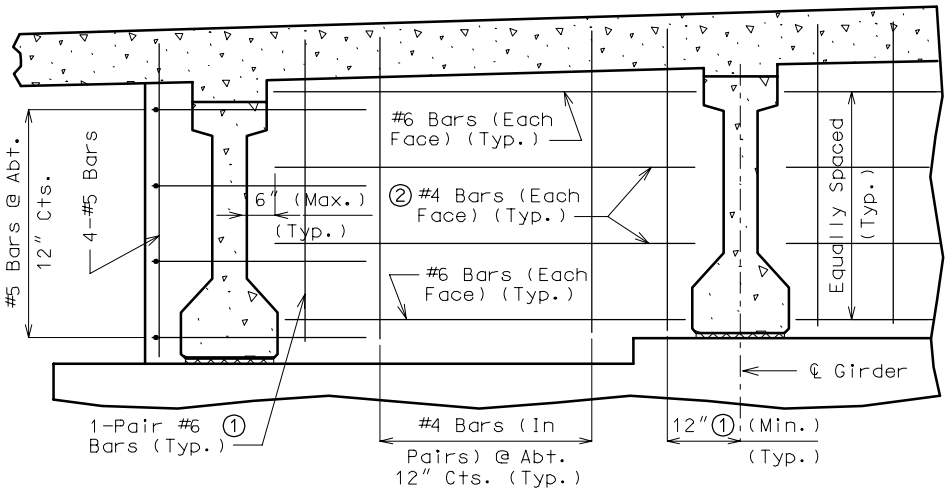

PART ELEVATION

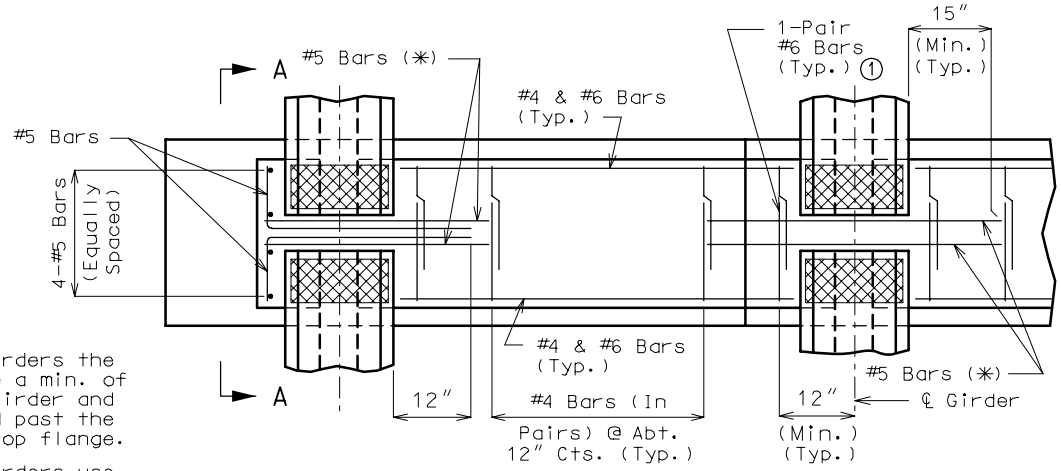

① For Bulb Tee Girders the #6 Bar shall be a min. of 15" from ℄ of Girder and will not extend past the bottom of the top flange.

② For Bulb Tee Girders use 3-#4 Bars in each Diaphragm face

(✳) #5 Bars for each layer of bent up strands.

PART PLAN

(✳✳) Use the same clearance as the longitudinal slab steel.

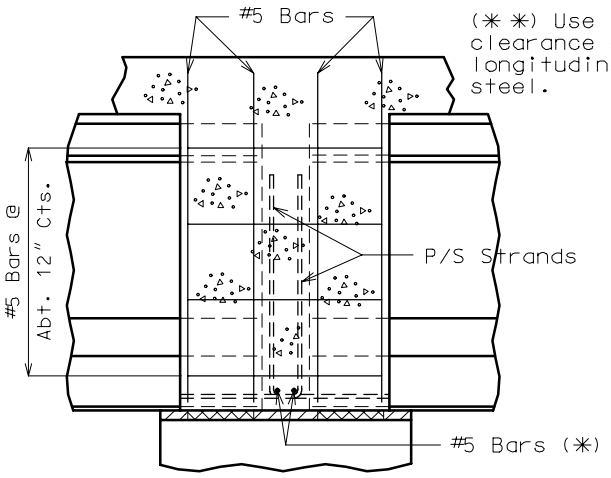

PART ELEVATION A-A

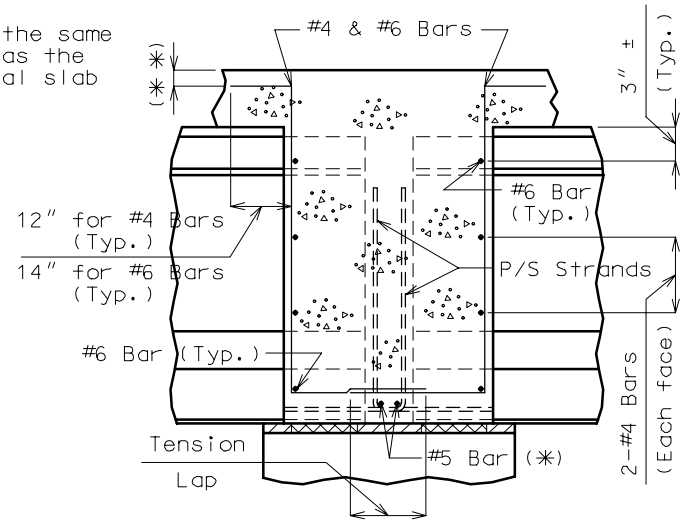

SECTION THRU DIAPHRAGM

CLOSED INTERMEDIATE DIAPHRAGMS
FIXED AND EXPANSION INTERMEDIATE BENTS:
REINFORCEMENT (SKEWED STRUCTURE)

Details

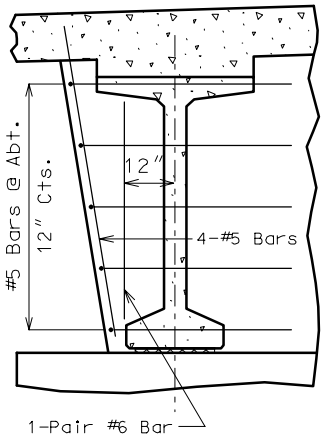

PART ELEVATION FOR BULB TEE GIRDERS

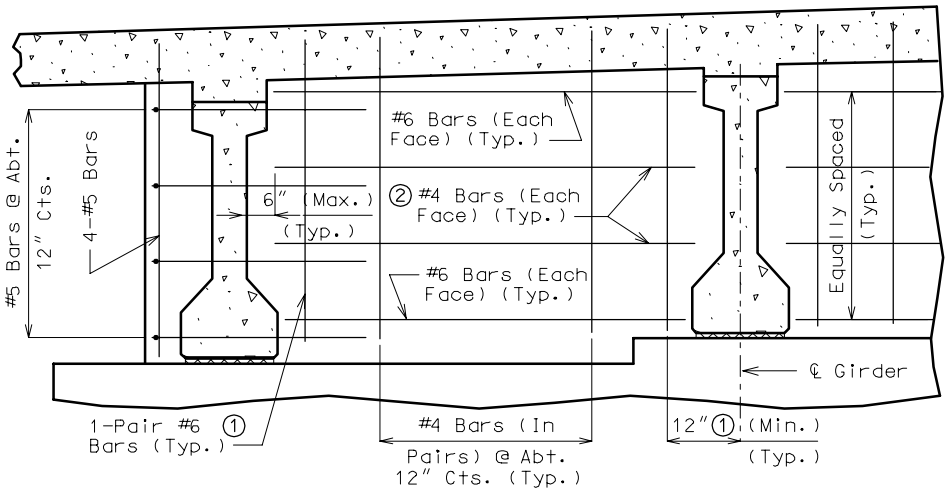

PART ELEVATION

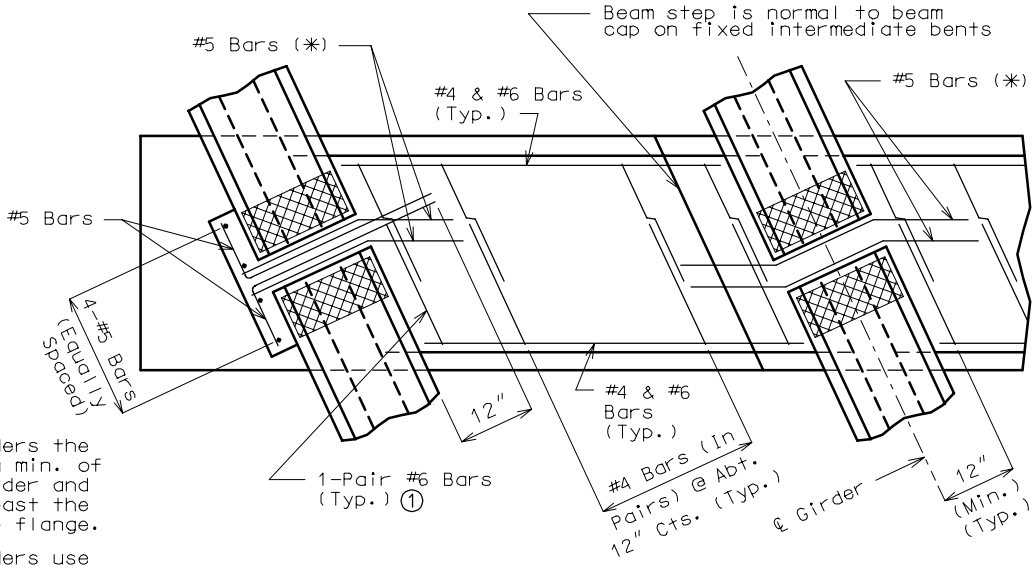

① For Bulb Tee Girders the #6 Bar shall be a min. of 15" from ℄ of Girder and will not extend past the bottom of the top flange.

② For Bulb Tee Girders use 3-#4 Bars in each Diaphragm face

PART PLAN

(✳) #5 Bars for each layer of bent up strands.

(✳✳) Omit leg on outside of exterior girder.

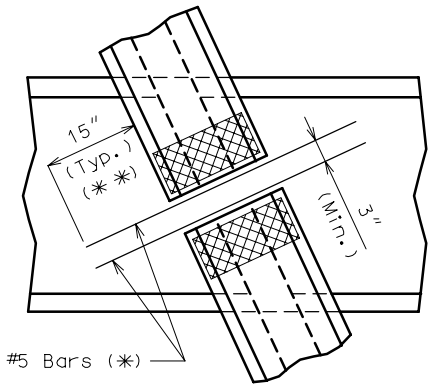

SKEWS THRU 25°

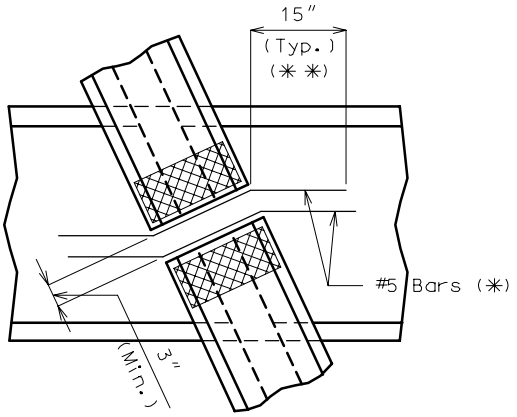

SKEWS OVER 25°

CLOSED INTERMEDIATE DIAPHRAGMS
(CHANGE IN GIRDER HEIGHT AT FIXED BENTS)

Details

Change girder heights within a continuous girder series only when specified on Design Layout or by Structural Project Manager.

Girder heights can only be changed at fixed bents for continuous series.

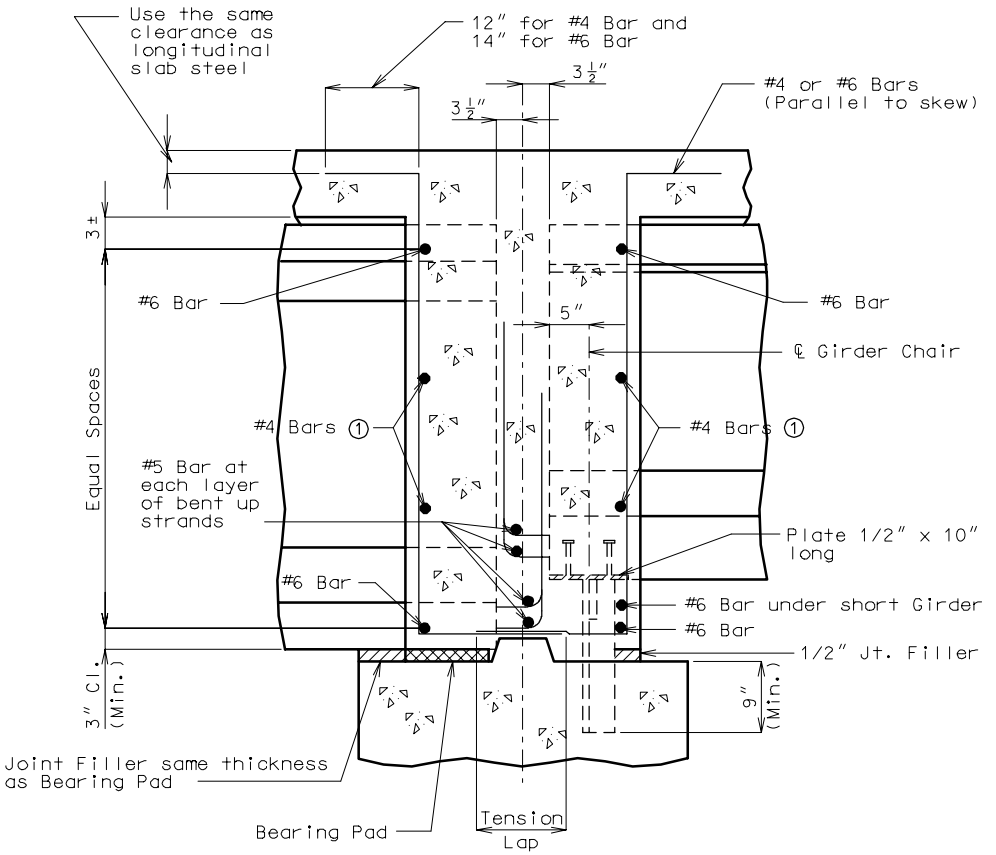

SECTION THRU DIAPHRAGM

NOTE: Girder heights can change a maximum of one Girder type.

① For Bulb Tee Girders use 3-#4 Bars in each Diaphragm face.

CLOSED INTERMEDIATE DIAPHRAGMS
(CHANGE IN GIRDER HEIGHT AT FIXED BENTS)

Details

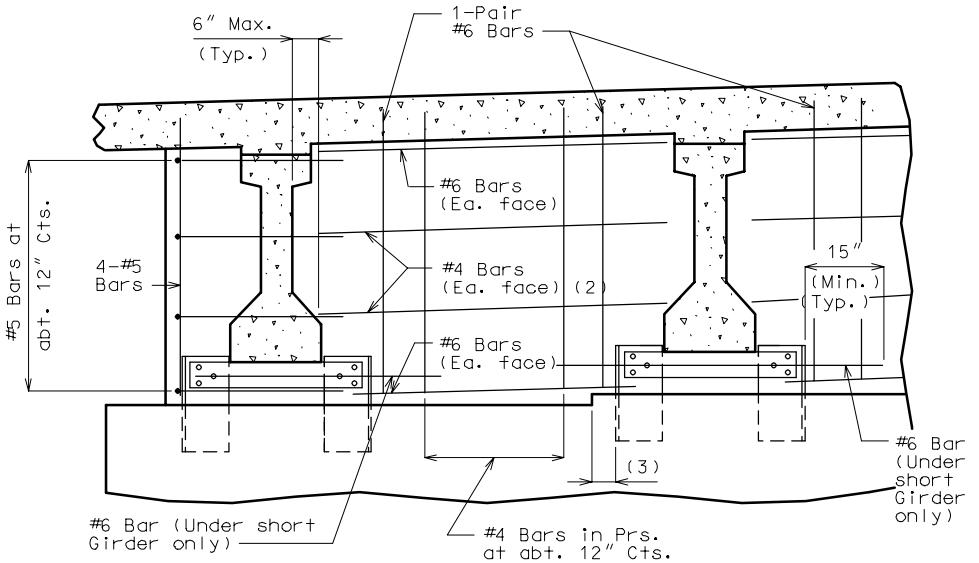

PART ELEVATION

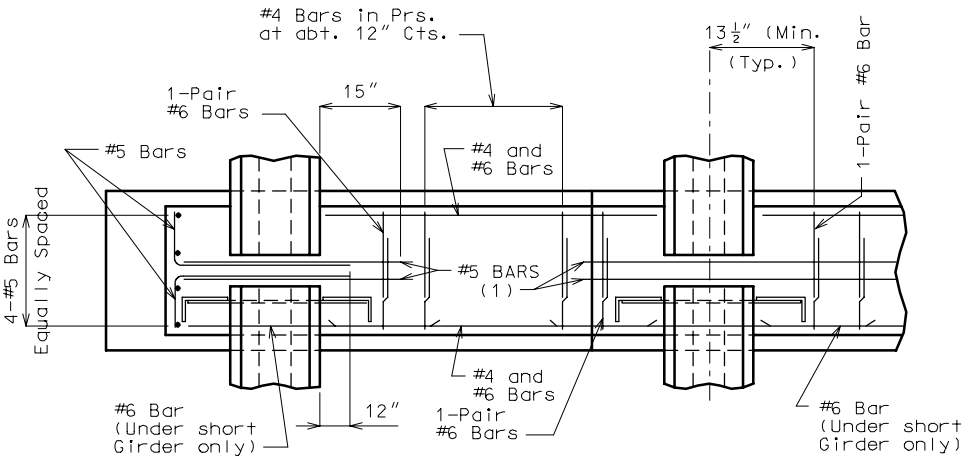

PART PLAN

(1) At each layer of bent strands.

(2) Bulb Tee Girders use 3-#4 Bars in each Diaphragm face.

(3) 3″ Min. when using beam step.

CLOSED INTERMEDIATE DIAPHRAGMS
(CHANGE IN GIRDER HEIGHT AT FIXED BENTS)
EDGE DISTANCE DETAILS:

Details

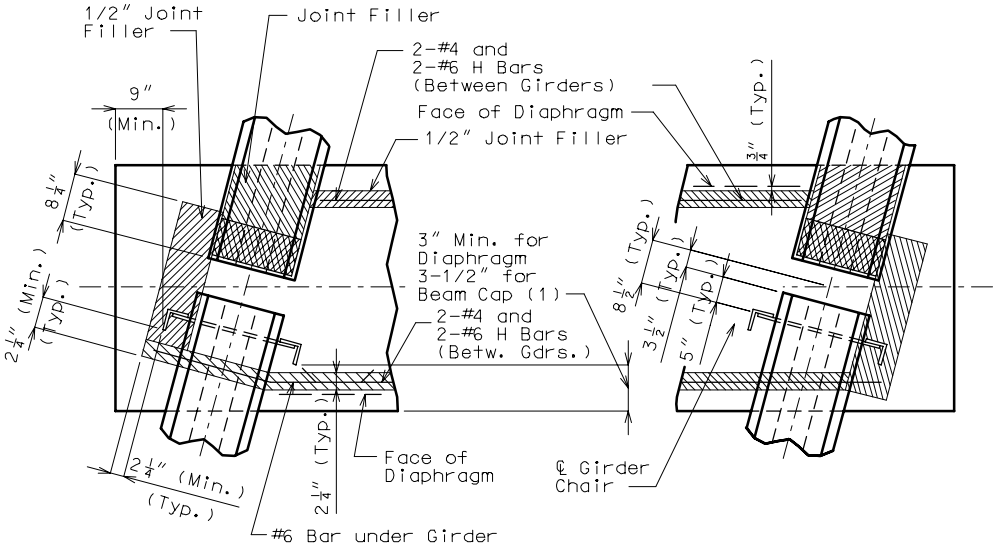

PART PLAN SKEWED STRUCTURES

NOTE: Field bending may be required for #4 and #6 H Bars In Skewed Structures near short Exterior Girder.

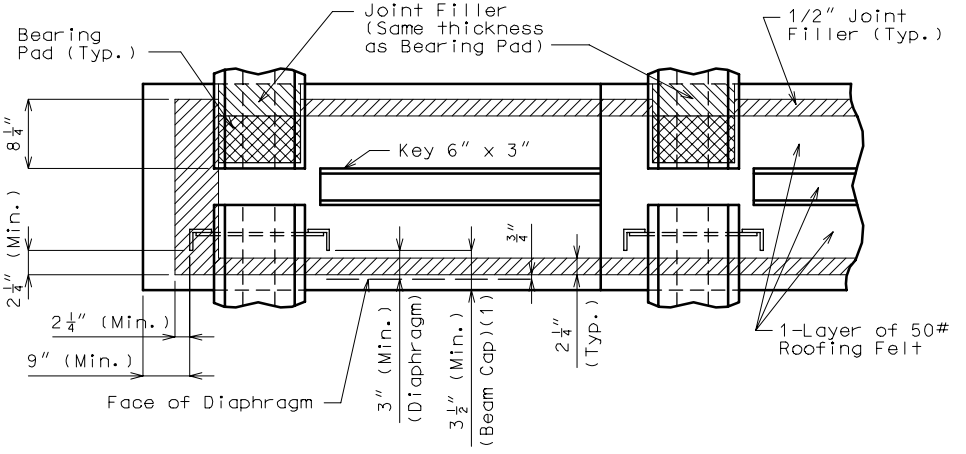

PART PLAN SQUARE STRUCTURES

(1) When Beam width is controlled by Girder Chair clearance, make Diaphragm Flush with Beam Cap.

CLOSED INTERMEDIATE DIAPHRAGMS
(CHANGE IN GIRDER HEIGHT AT FIXED BENTS)
GIRDER CHAIR DETAILS:

Details

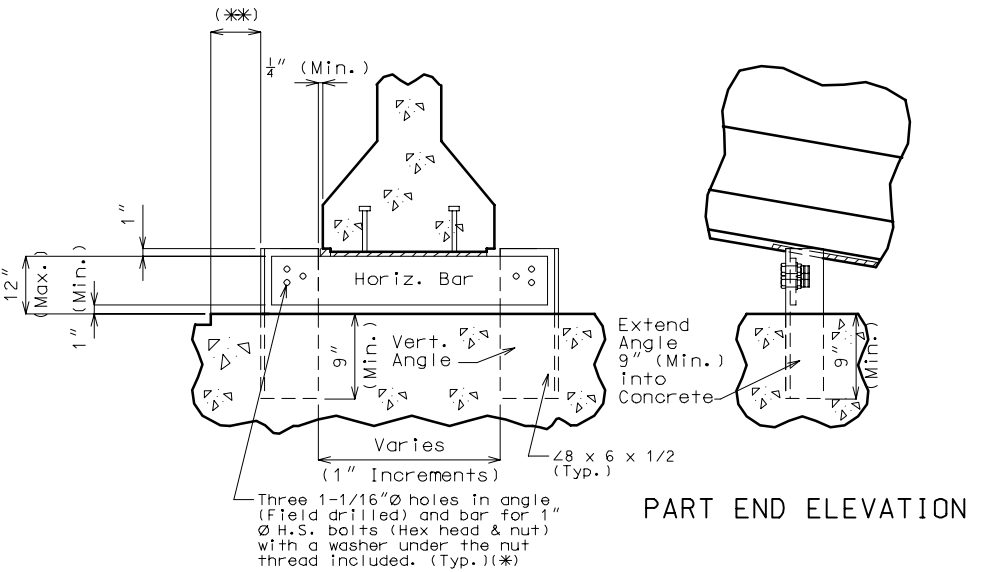

PART FRONT ELEVATION

SERVICE LOAD REACTIONS	VERTICAL ANGLE	HORIZONTAL BAR
90 Kips	8 x 6 x 1/2	7″ x 7/8″

Use DL1 and 50#/Sq.Ft. Construction Load for Reactions.

(✱) See page 4.3-1 of Sec. 3.72 for details of girder chair.

(✱✱) 3″ Min. when using beam step.

CLOSED INTERMEDIATE DIAPHRAGMS
(3/4" CHAMFER AND 1/2" JOINT FILLER)

Details

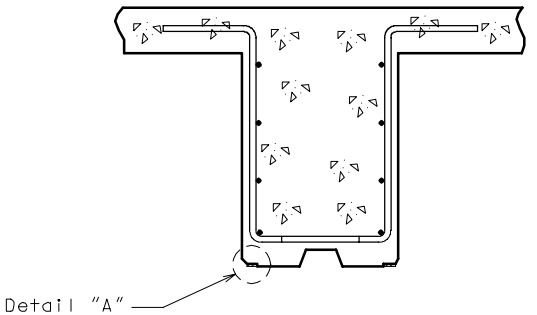

SECTION THRU
INTERMEDIATE DIAPHRAGMS

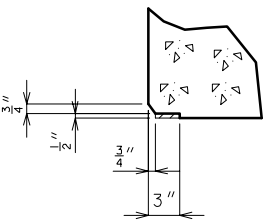

DETAIL "A"

INTERMEDIATE DIAPHRAGMS

USE STEEL INTERMEDIATE DIAPHRAGMS FOR PRESTRESS SPANS OVER 50 FEET.

Details

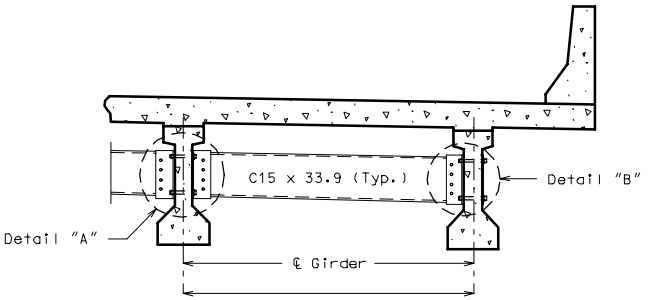

PART SECTION SHOWING
INTERMEDIATE DIAPHRAGMS

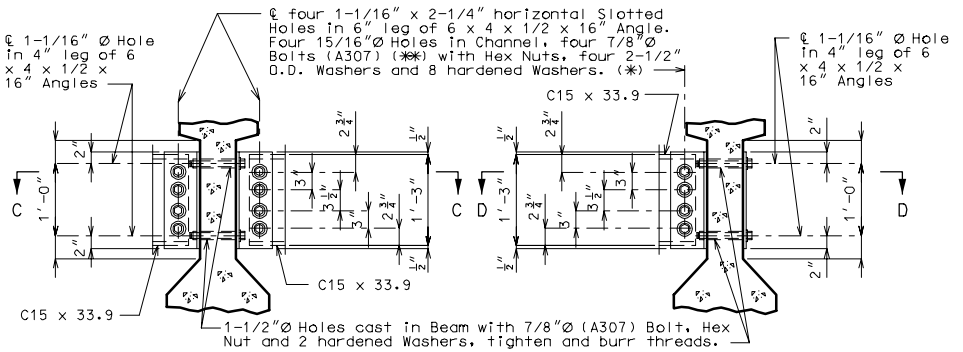

DETAIL "A" DETAIL "B"

(✱) In lieu of 2-1/2" O.D. washers, contractor may substitute a 3/16" (Min. thickness) plate with four 15/16"Ø holes and one hardened washer per bolt.

(✱✱) These bolts shall be tightened to provide a tension of one-half that specified by section 712.10.2 of the Missouri Standard Specifications.

NOTE: Use Detail "A" at interior girder for diaphragms straight in line across structure. (Use straight diaphragm normal to girders for skews thru 20°).

Use Detail "B" for exterior girder and interior girder for diaphragms stepped across structure. (Use stepped diaphragm for skews over 20°).

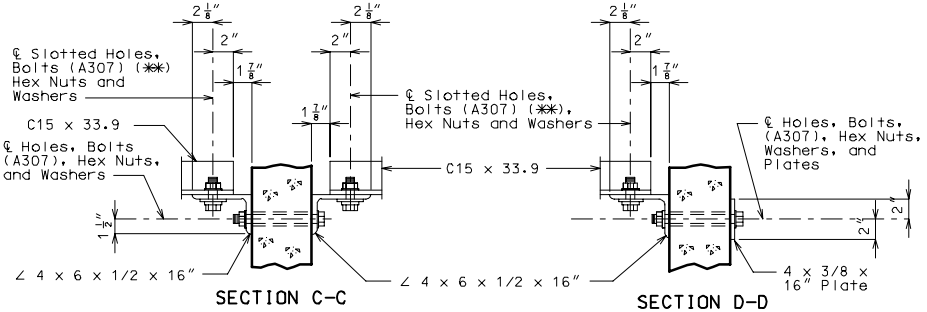

SECTION C-C SECTION D-D

NOTE: For General Notes, (✱) and (✱✱), see Bridge Manual Section 4.

INTERMEDIATE DIAPHRAGMS
USE STEEL BENT PLATE FOR ALL BULB TEE SPANS

Details

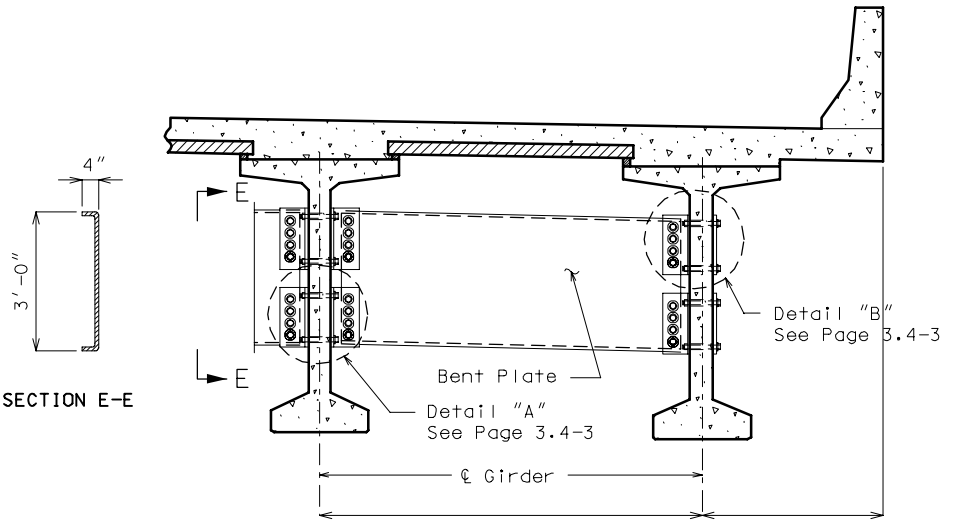

PART SECTION SHOWING
INTERMEDIATE DIAPHRAGMS

Bulb Tee spans of 90 feet or less require one intermediate diaphragm per span. Bulb Tee spans of over 90 feet require two intermediate diaphragms per span (spaced equally as allowed by clearance to draped strands). Maximum spacing is 50 ft.

The detailer shall check that the 1-1/2 inch Ø holes for the diaphragms shown on the design plans will provide a mimimum clearance of at least 1-1/2 inches to any prestressing strands.

INTERMEDIATE DIAPHRAGMS
USE STEEL BENT PLATE FOR ALL BULB TEE SPANS

Details

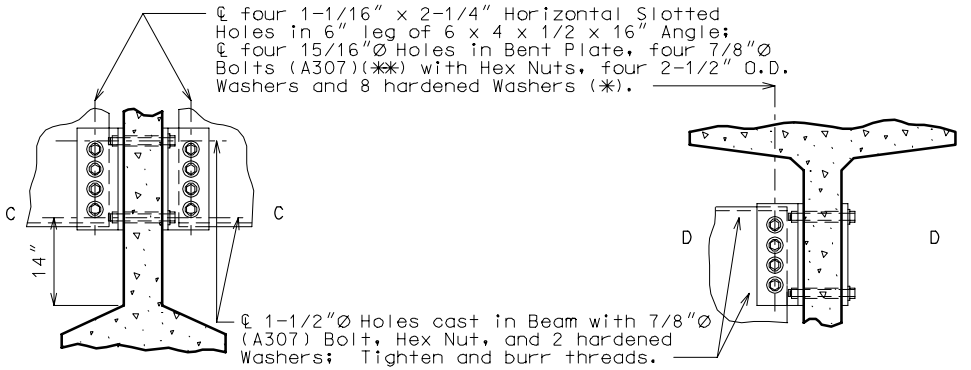

DETAIL "A" DETAIL "B"

(✱) In lieu of 2-1/2" O.D. washers, the contractor may substitute a 3/16" (min. thickness) plate with four 15/16"Ø holes and one hardened washer per bolt.

(✱✱) These bolts shall be tightened to provide a tension of one-half that specified by Section 712.10.2 of the Missouri Standard Specifications.

Note: Use Detail "A" at interior girders for diaphragms straight in line across structure. (Use straight diaphragms normal to girders for skews thru 20°).

Use Detail "B" for exterior girders and interior girders for diaphragms stepped across structure. (Use stepped diaphragms for skews over 20°).

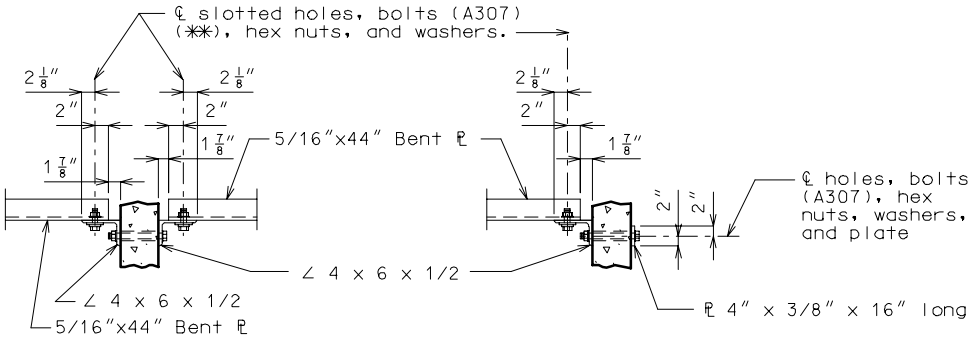

SECTION C-C SECTION D-D

Note: For General Notes, (✱) and (✱✱), See Bridge Manual Section 4.

DETAILS OF COIL TIES

Details

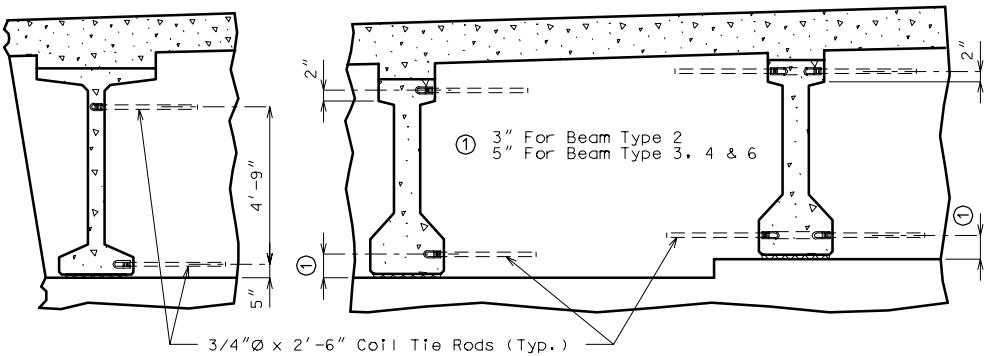

PART ELEVATION FOR BULB-TEE GIRDERS

PART ELEVATION

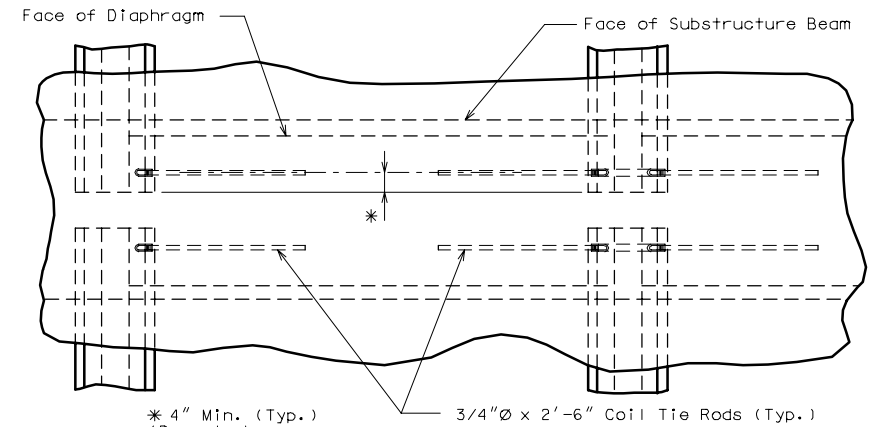

PART PLAN
(SQUARE)

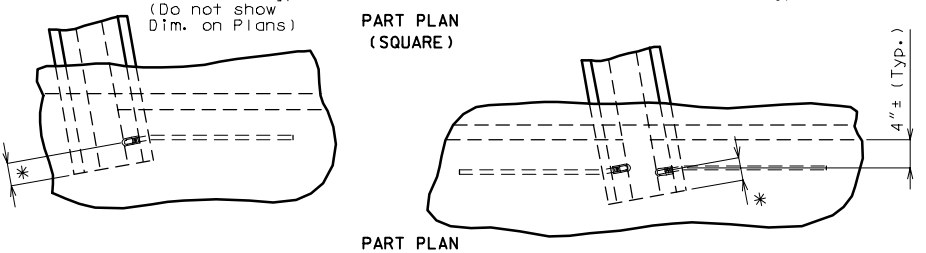

PART PLAN
(SKEWED TO 20°)

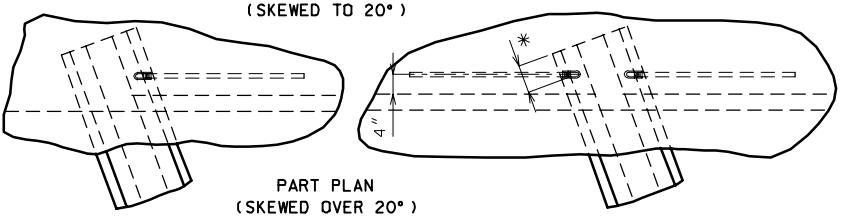

PART PLAN
(SKEWED OVER 20°)

DETAILS OF COIL TIES

Details

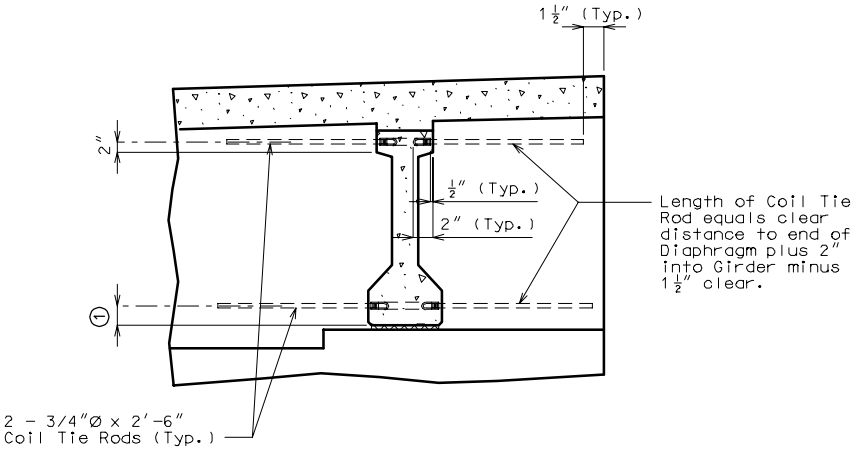

EXTERIOR GIRDER AT END BENT

1 3" For Beam Type 2
5" For Beam Type 3, 4 & 6

NOTE: See previous page for location of Coil Tie Rods on Bulb Tees.

NON-INTEGRAL END BENTS
END DIAPHRAGMS WITH NO EXPANSION DEVICE
DIMENSIONS:

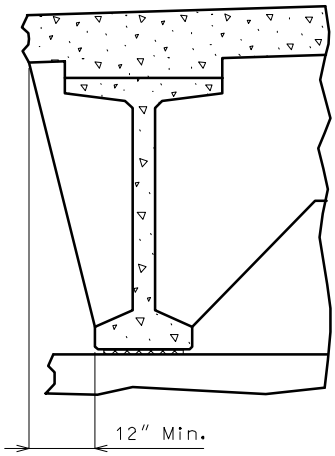

PART ELEVATION
FOR BULB TEE GIRDERS

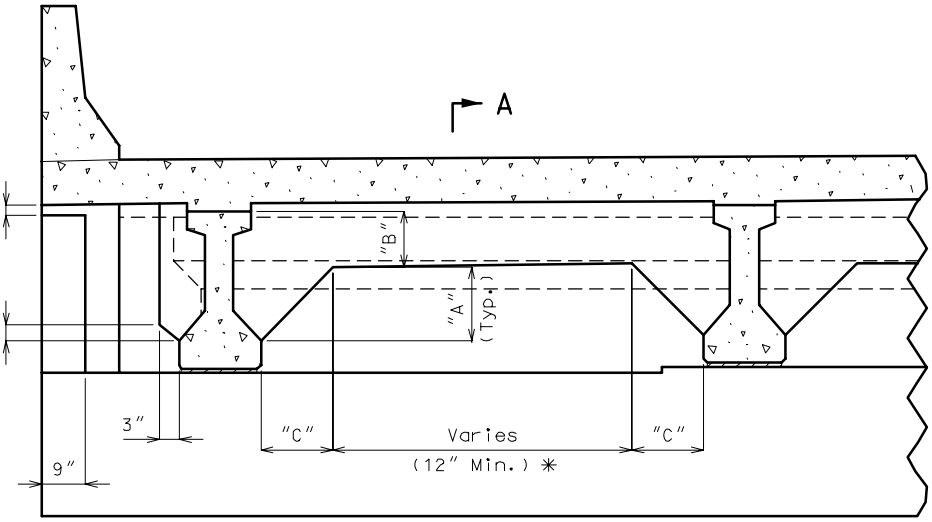

PART ELEVATION NEAR END BENT

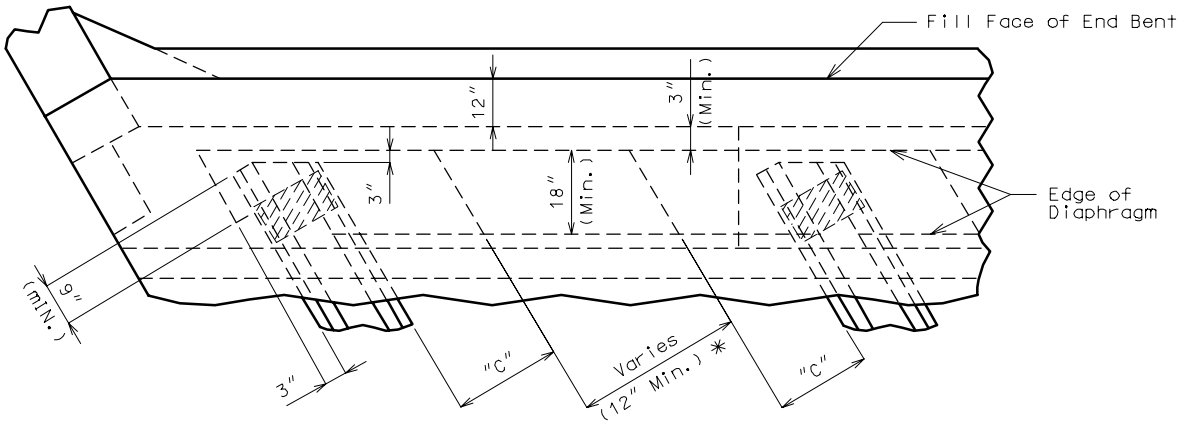

PART PLAN NEAR END BENT

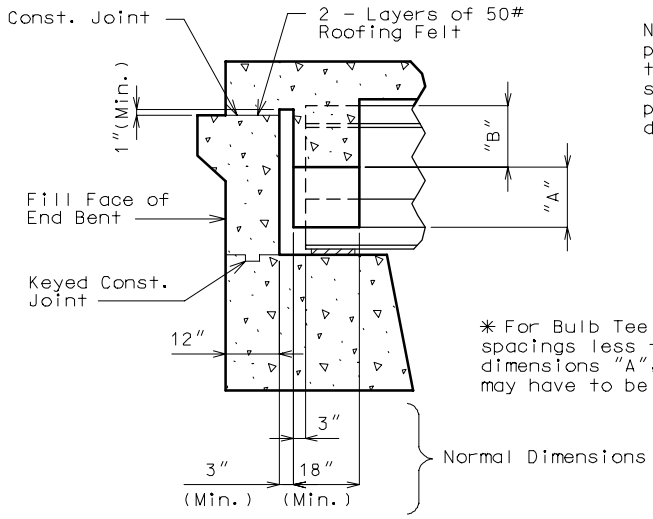

PART SECTION A-A

NOTE: For Seismic Performance Category (SPC) A provide slotted sole plates for longitudinal temperature movement. For SPC B, C and D provide slotted sole plates for longitudinal temperature plus earthquake movements. Anchor bolts shall be designed according to Section 1.2 Page 7.16.

✳ For Bulb Tee Girder spacings less than 8'-8" dimensions "A", "B" & "C" may have to be modified.

GIRDER TYPE	DIMENSIONS		
	"A"	"B"	"C"
TYPE "2" 2'-8"	12"	15"	13"
TYPE "3" 3'-3"	17"	15"	19"
TYPE "4" 3'-9"	19"	18"	21"
TYPE "6" 4'-6"	2'-3"	21"	2'-1"
BULB TEE 6'-0½" ✳	3'-0"	2'-6½"	2'-9"

NON-INTEGRAL END BENTS
END DIAPHRAGMS WITH NO EXPANSION DEVICE
COIL TIE RODS:

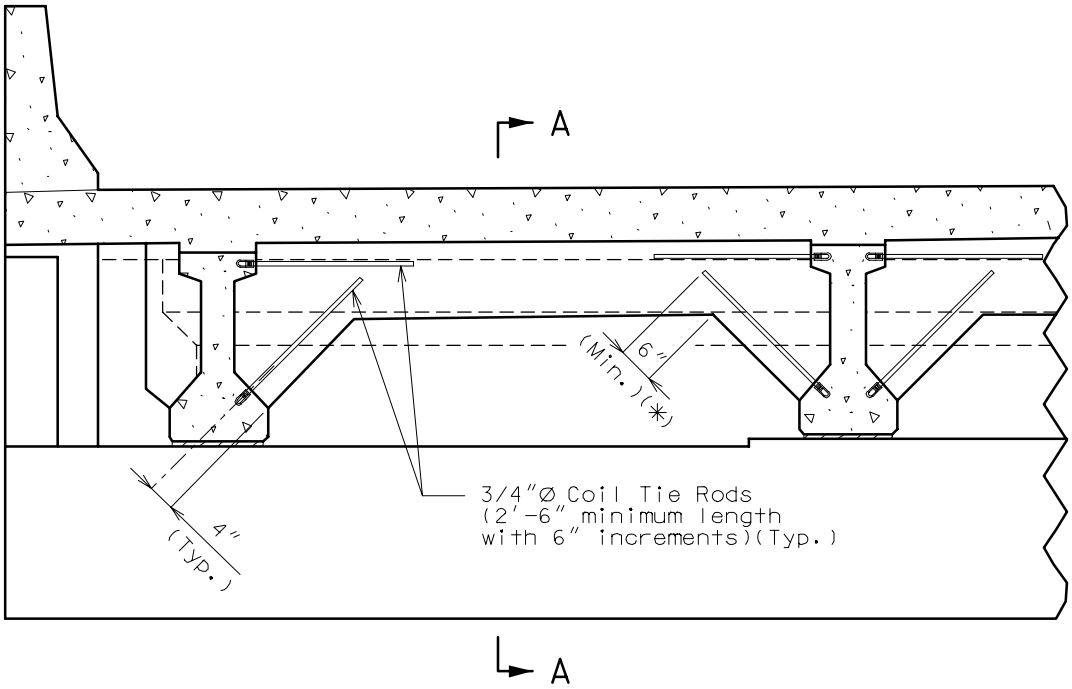

PART ELEVATION NEAR END BENT

NOTE: For location of the Coil Tie Rods in a plan view. See this Bridge Manual Section.

(✳) 6″ (Min.) shall be used for all I-Girder and Bulb Tee Girders.

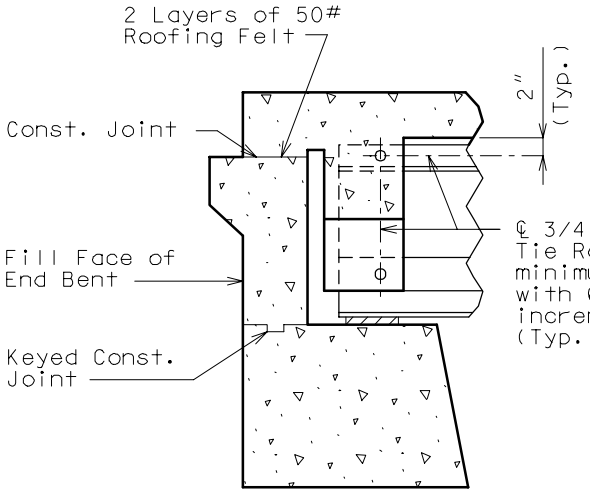

PART SECTION A-A

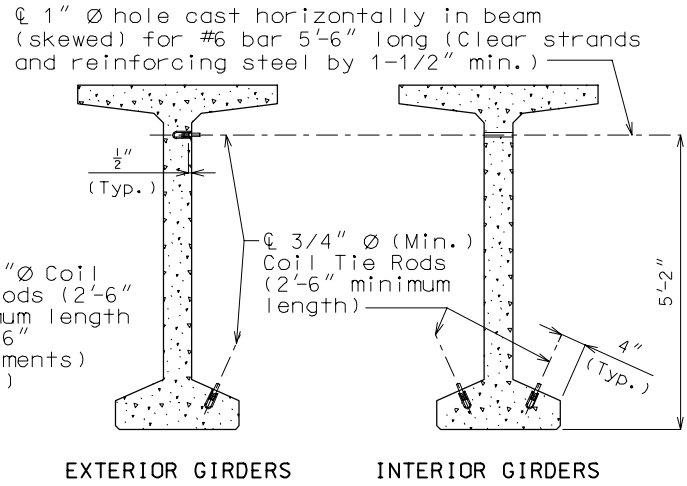

DETAILS OF COIL TIE RODS
IN BULB TEE GIRDERS

NON-INTEGRAL END BENTS
END DIAPHRAGMS WITH NO EXPANSION DEVICE
REINFORCEMENT:

Details

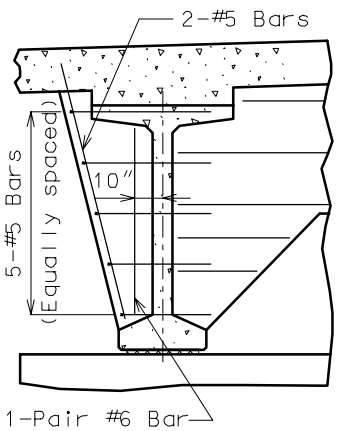

PART ELEVATION NEAR END BENT FOR BULB TEE GIRDERS

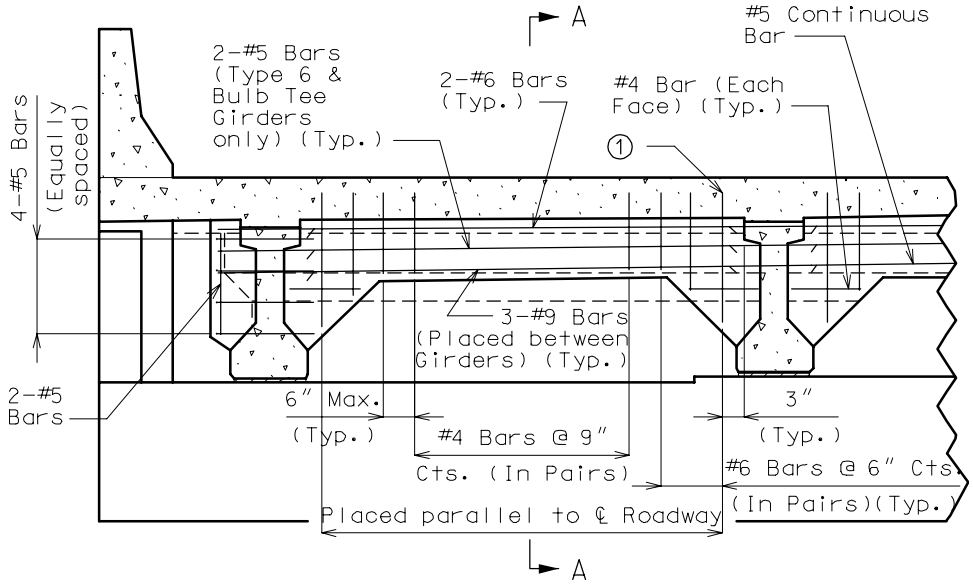

PART ELEVATION NEAR END BENT

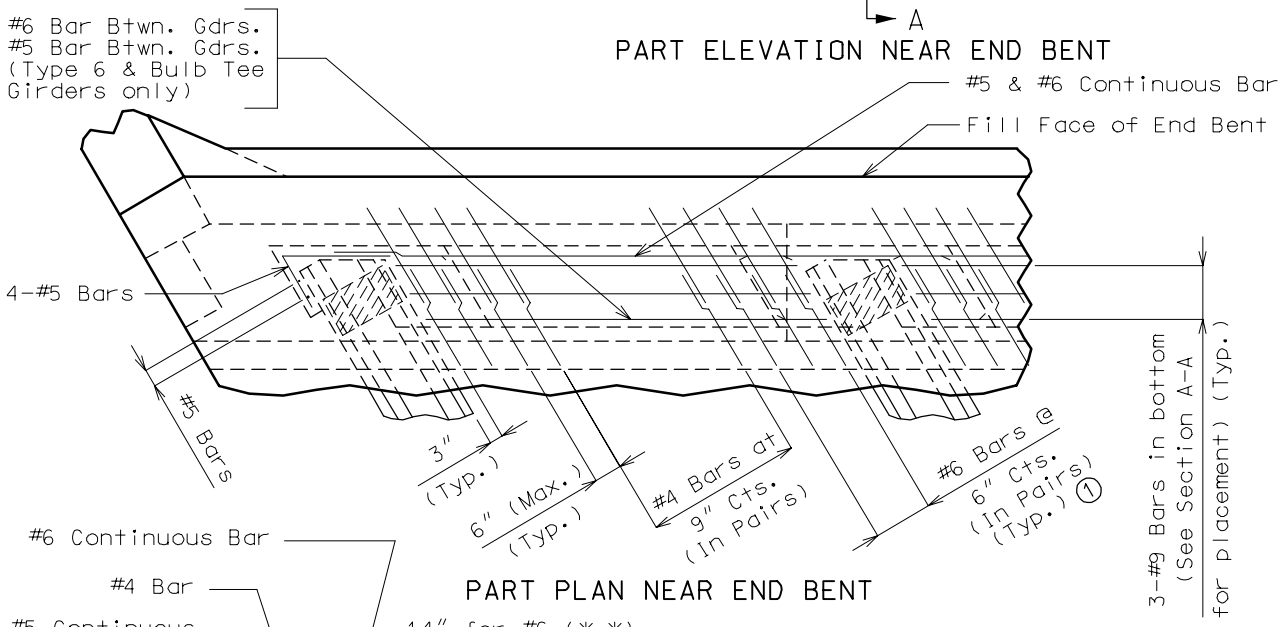

PART PLAN NEAR END BENT

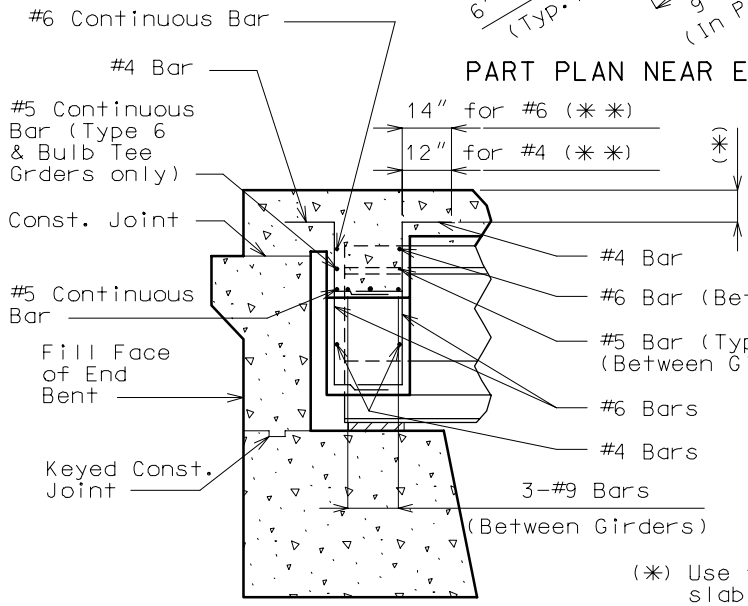

PART SECTION A-A

1 For Bulb Tee Girders the first #6 Bar shall be placed 10" from the ℄ of Web (Top Flange will prevent some Bars from extending into the Slab).

NOTE: Bars across end of girders to be continuous.

(✳) Use the same clearance as longitudinal slab steel.

(✳✳) Show this dimension on Bridge Plan Sheets.

NON-INTEGRAL END BENTS
END DIAPHRAGMS WITH EXPANSION DEVICE
DIMENSIONS:

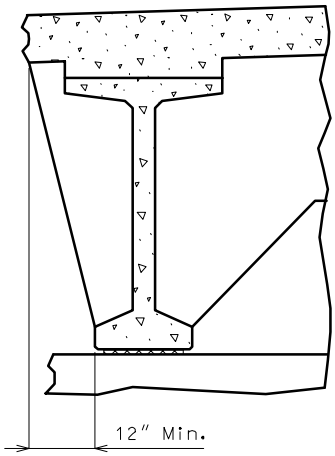

PART ELEVATION
FOR BULB TEE GIRDERS

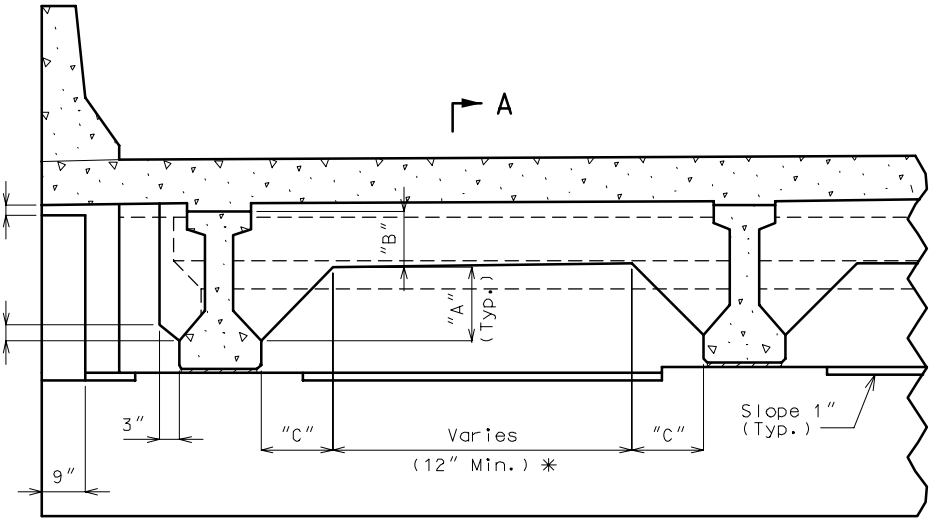

PART ELEVATION NEAR END BENT

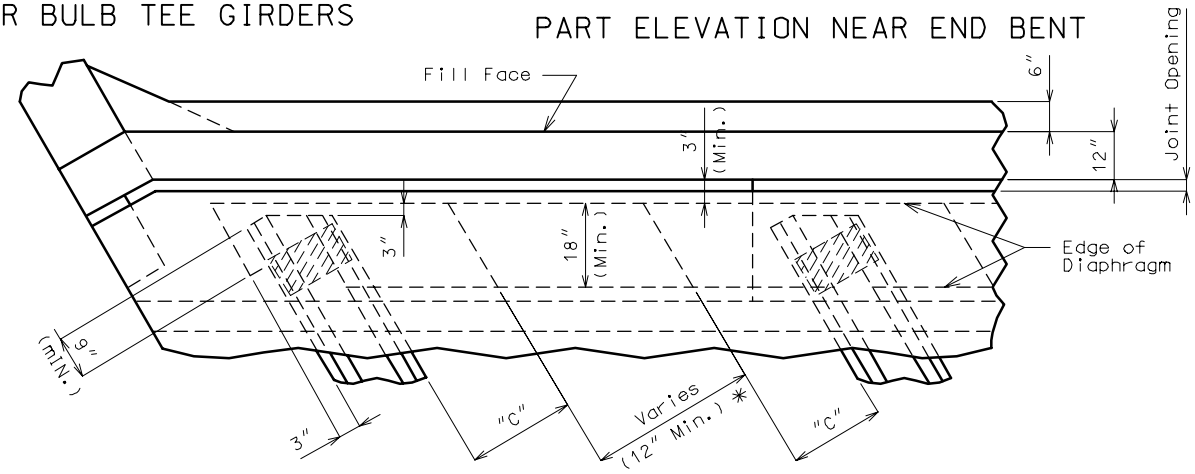

PART PLAN NEAR END BENT

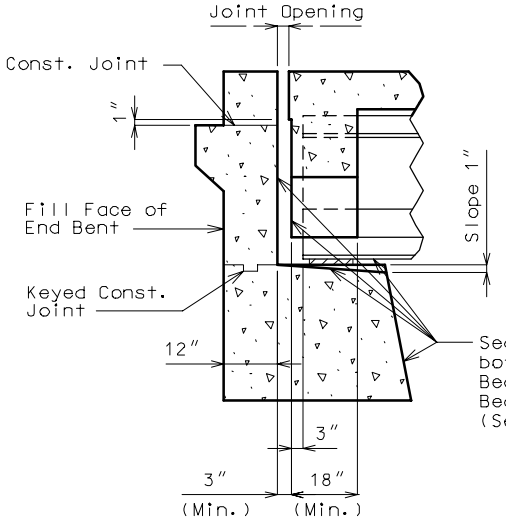

PART SECTION A-A

NOTE: For Seismic Performance Category (SPC) A provide slotted sole plates for longitudinal temperature movement. For SPC B, C and D provide slotted sole plates for longitudinal temperature plus earthquake movements. Anchor bolts shall be designed according to Section 1.2 Page 7.16.

✳ For Bulb Tee Girder spacings less than 8'-8" dimensions "A", "B" & "C" may have to be modified.

Seal Backwall, Diaphragm, bottom of Girder, top of Beam and front face of Beam with Protective Coating (See Special Provisions)

GIRDER TYPE	DIMENSIONS		
	"A"	"B"	"C"
TYPE "2" 2'-8"	12"	15"	13"
TYPE "3" 3'-3"	17"	15"	19"
TYPE "4" 3'-9"	19"	18"	21"
TYPE "6" 4'-6"	2'-3"	21"	2'-1"
BULB TEE 6'-0½" ✳	3'-0"	2'-6½"	2'-9"

NON-INTEGRAL END BENTS
END DIAPHRAGMS WITH EXPANSION DEVICE
COIL TIE RODS:

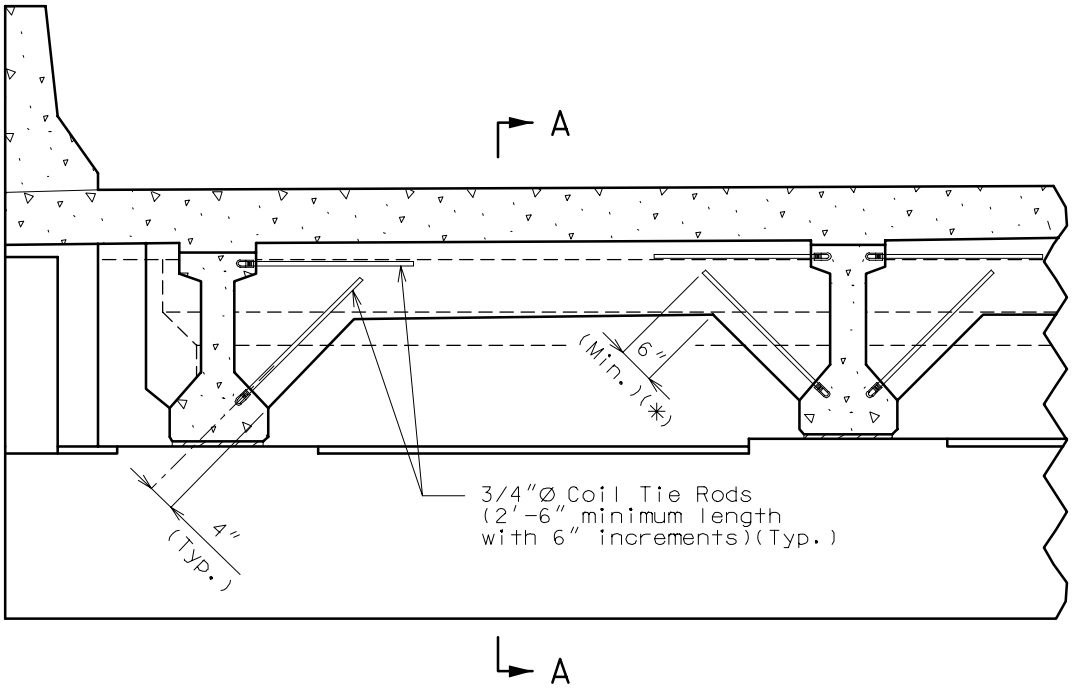

PART ELEVATION NEAR END BENT

NOTE: For location of the Coil Tie Rods in a plan view. See this Bridge Manual Section.

(✳) 6″ (Min.) shall be used for all I-Girder and Bulb Tee Girders.

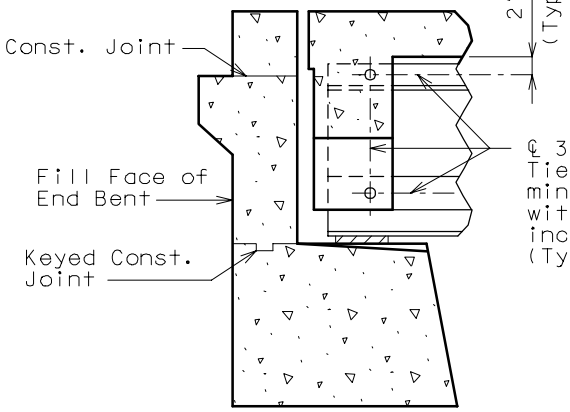

PART SECTION A-A

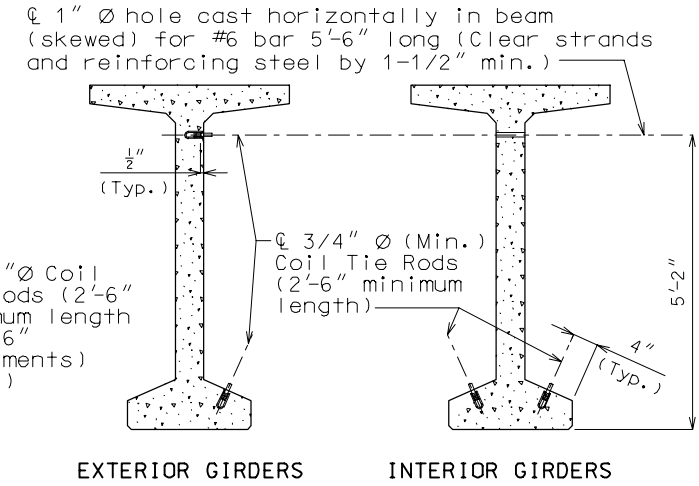

DETAILS OF COIL TIE RODS IN BULB TEE GIRDERS

Details

NON-INTEGRAL END BENTS
END DIAPHRAGMS WITH EXPANSION DEVICE
REINFORCEMENT:

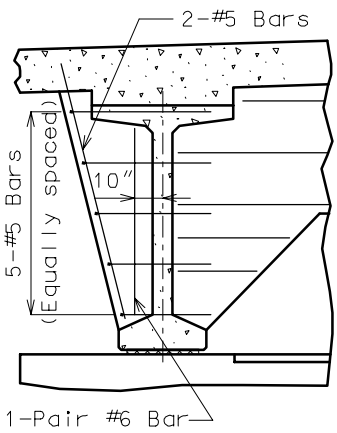

PART ELEVATION NEAR END BENT FOR BULB TEE GIRDERS

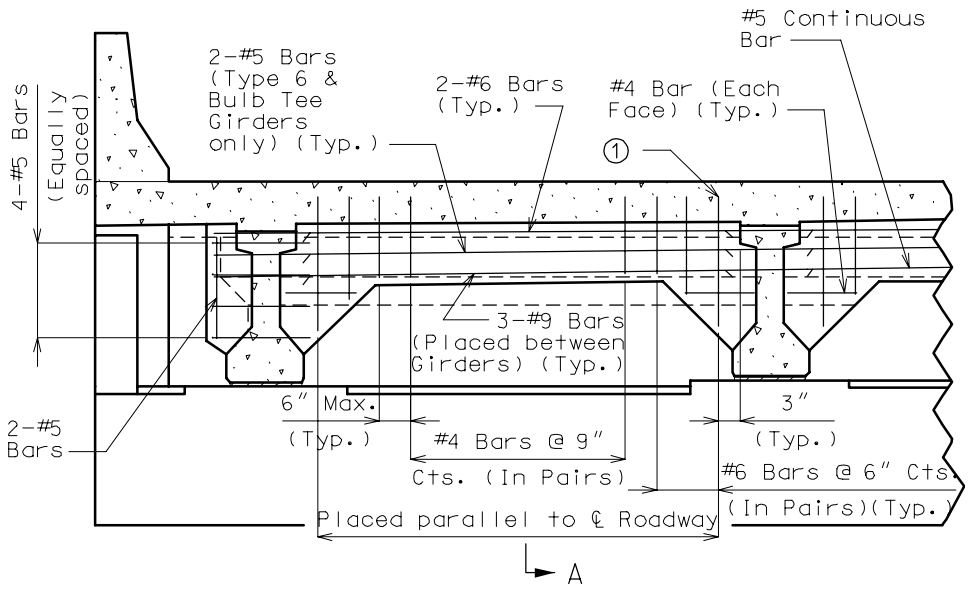

PART ELEVATION NEAR END BENT

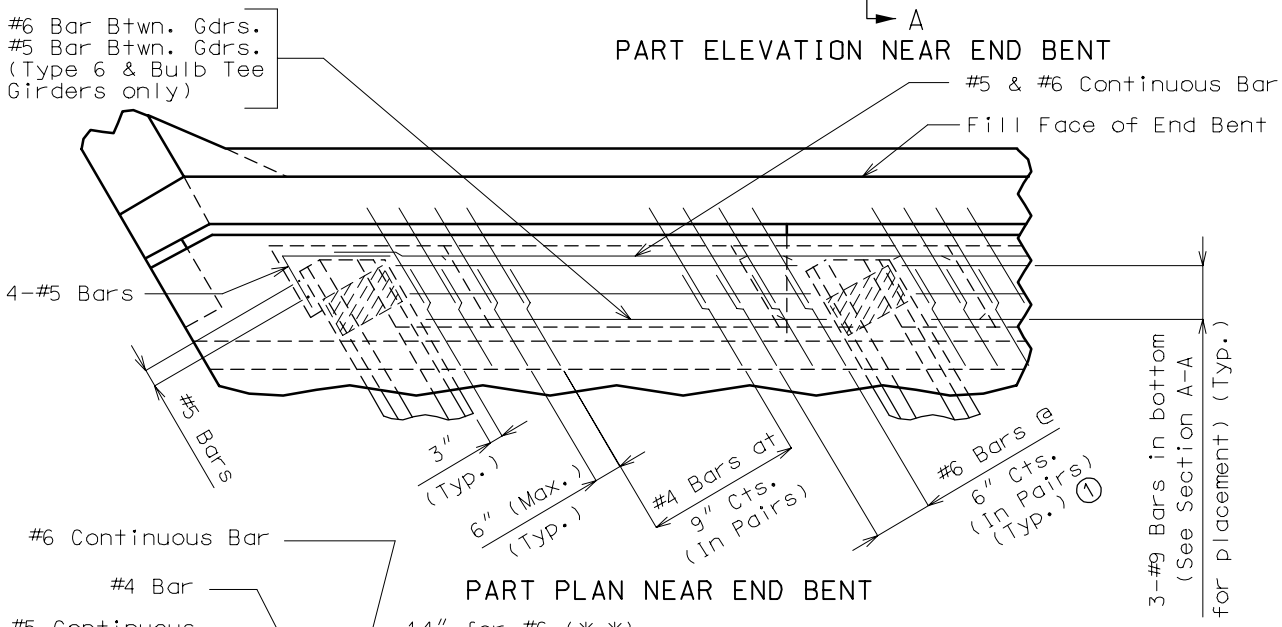

PART PLAN NEAR END BENT

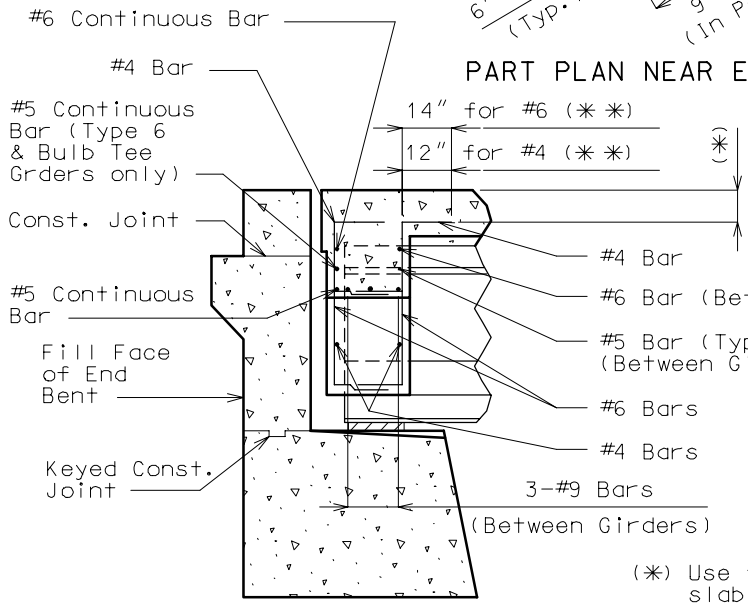

PART SECTION A-A

1 For Bulb Tee Girders the first #6 Bar shall be placed 10" from the ℄ of Web (Top Flange will prevent some Bars from extending into the Slab).

NOTE: Epoxy Coat all Reinforcing Steel in the End Diaphragms.

NOTE: Bars across end of girders to be continuous.

(✳) Use the same clearance as longitudinal slab steel.

(✳✳) Show this dimension on Bridge Plan Sheets.

NON-INTEGRAL INTERMEDIATE BENTS
END DIAPHRAGMS WITH EXPANSION DEVICE
DIMENSIONS:

NOTE: Slope at top of Beam Cap and Protective Coating to be used on Structures with Expansion Devices, see Section 3.55 Page 5.4 for details.

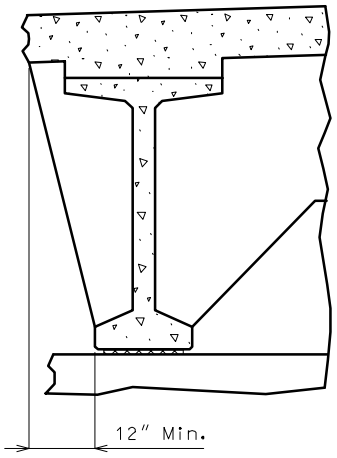

PART ELEVATION
FOR BULB TEE GIRDERS

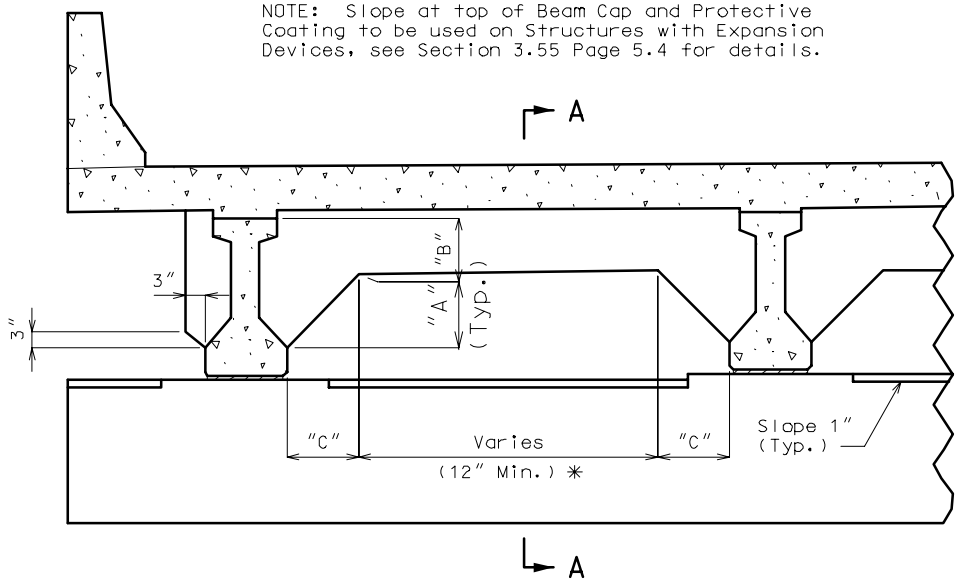

PART ELEVATION NEAR INT. BENT

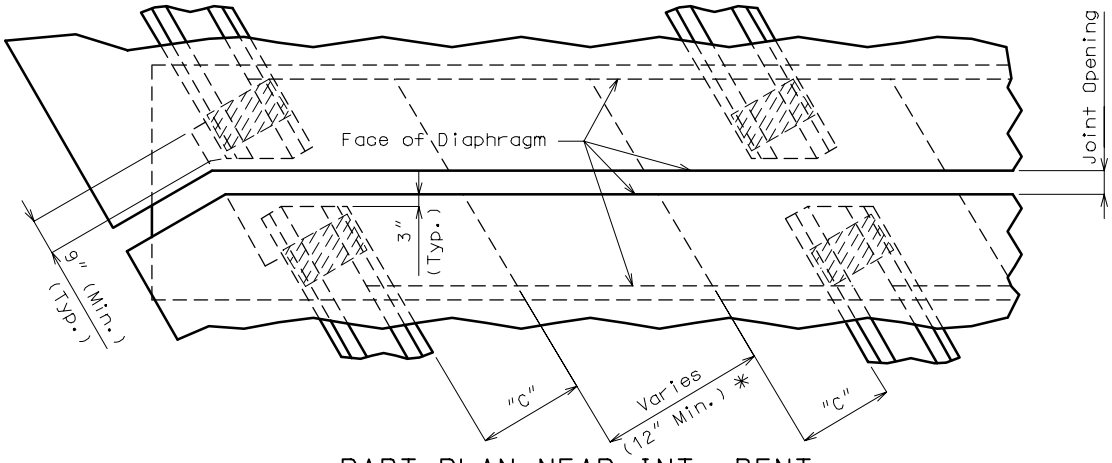

PART PLAN NEAR INT. BENT

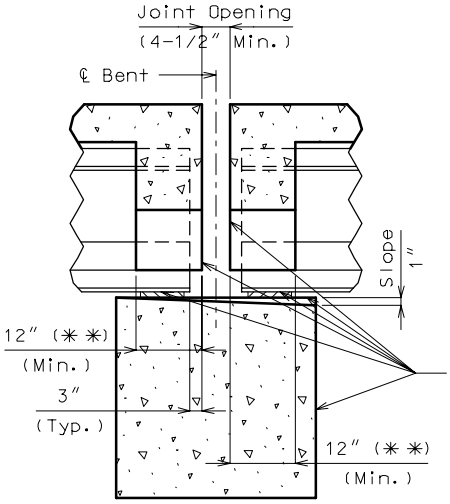

PART SECTION A-A

NOTE: For Seismic Performance Category (SPC) A provide slotted sole plates for longitudinal temperature movement. For SPC B, C and D provide slotted sole plates for longitudinal temperature plus earthquake movements. Anchor bolts shall be designed according to Section 1.2 Page 7.16.

✳ For Bulb Tee Girder spacings less than 8'-8" dimensions "A", "B" & "C" may have to be modified.

✳✳ Make sure the Diaphragm is wide enough to provide enough cover for the Coil Tie Rods.

Seal Diaphragm, bottom of Girder, top of Beam and front face of Beam with Protective Coating (See Special Provisions).

GIRDER TYPE	DIMENSIONS		
	"A"	"B"	"C"
TYPE "2" 2'-8"	12"	15"	13"
TYPE "3" 3'-3"	17"	15"	19"
TYPE "4" 3'-9"	19"	18"	21"
TYPE "6" 4'-6"	2'-3"	21"	2'-1"
BULB TEE 6'-0½" ✳	3'-0"	2'-6½"	2'-9"

NON-INTEGRAL INTERMEDIATE BENTS
END DIAPHRAGMS WITH EXPANSION DEVICE
COIL TIE RODS:

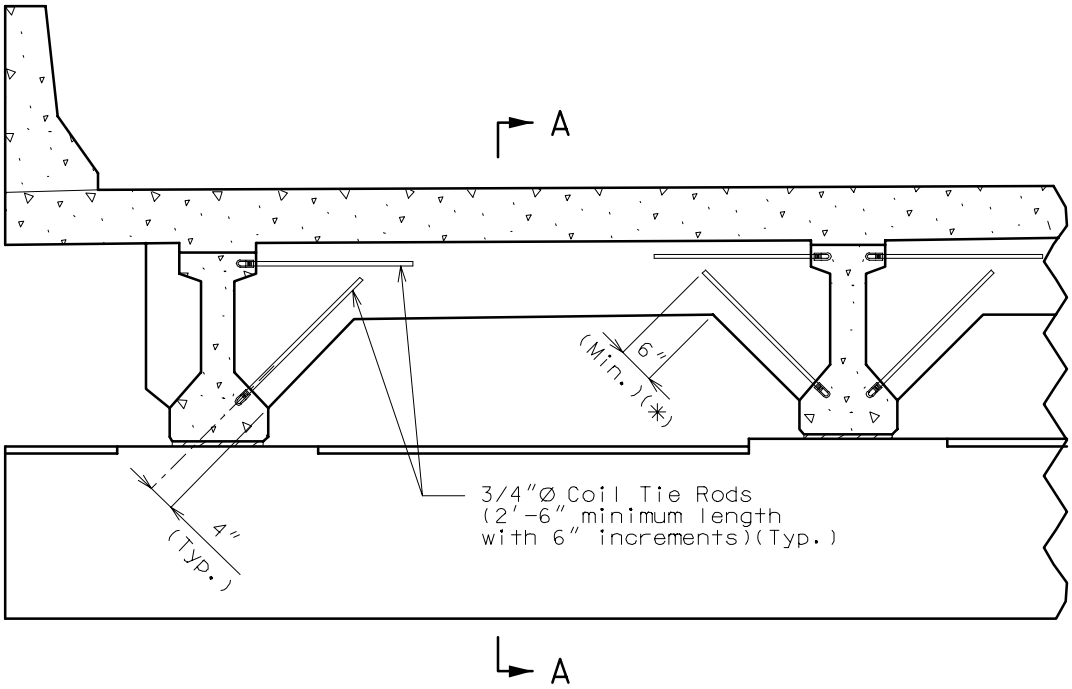

PART ELEVATION NEAR INT. BENT

NOTE: For location of the Coil Tie Rods in a plan view. See this Bridge Manual Section.

(✳) 6″ (Min.) shall be used for all I-Girder and Bulb Tee Girders.

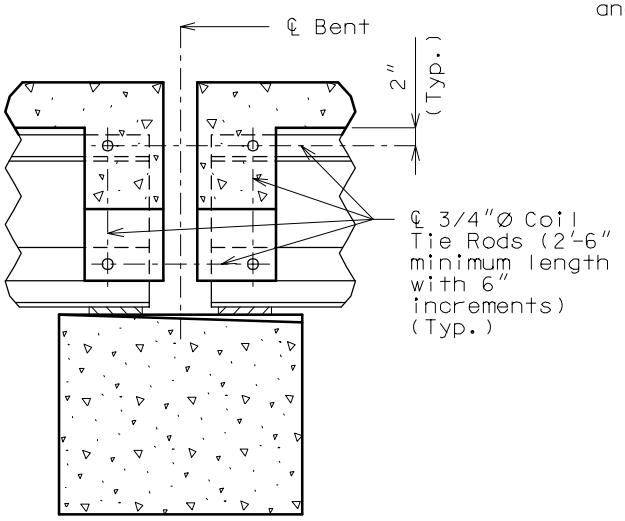

PART SECTION A-A

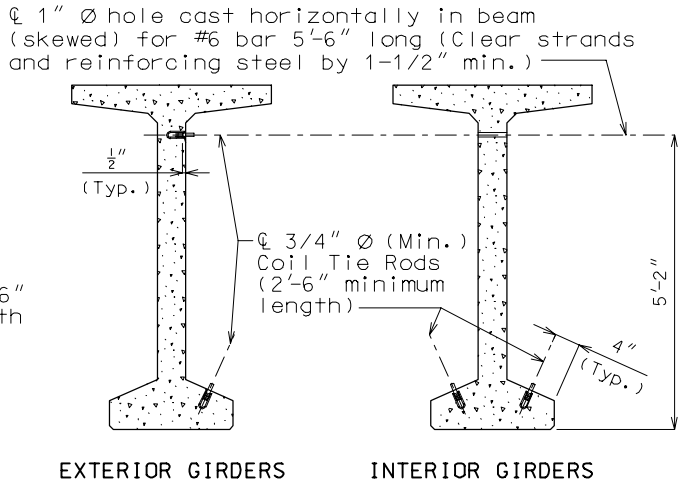

DETAILS OF COIL TIE RODS IN BULB TEE GIRDERS

Details

NON-INTEGRAL INTERMEDIATE BENTS
END DIAPHRAGMS WITH EXPANSION DEVICE
REINFORCEMENT:

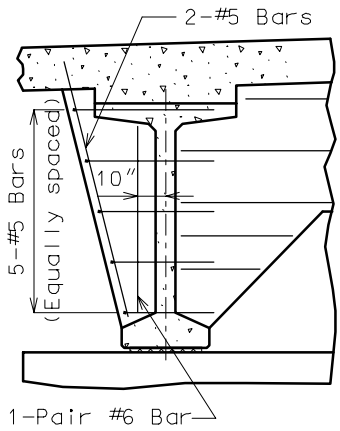

PART ELEVATION
NEAR INT. BENT FOR
BULB TEE GIRDERS

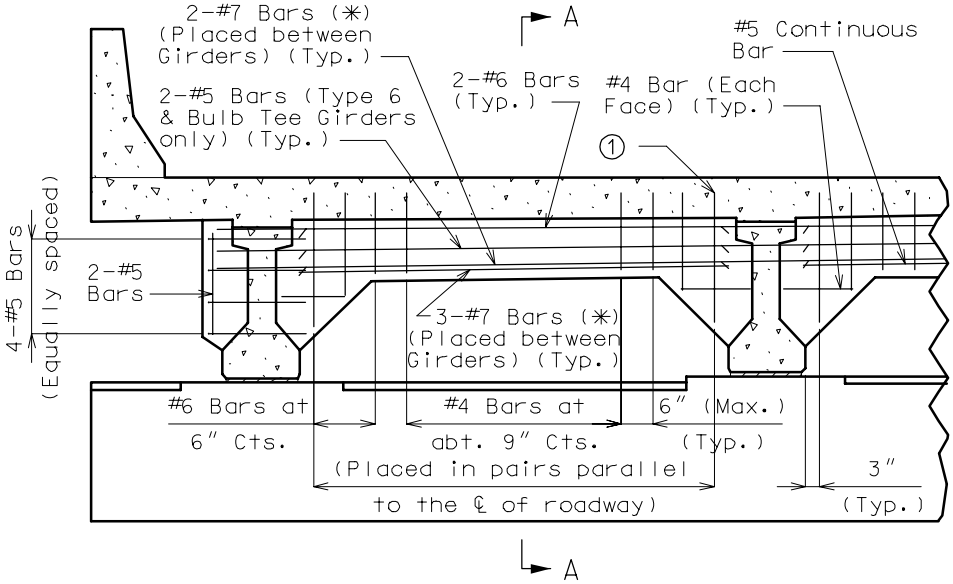

PART ELEVATION NEAR INT. BENT

NOTE:
Slope at top of beam cap and protective coating to be used on structures with expansion devices, see Section 3.35 Page 5.4 for details.

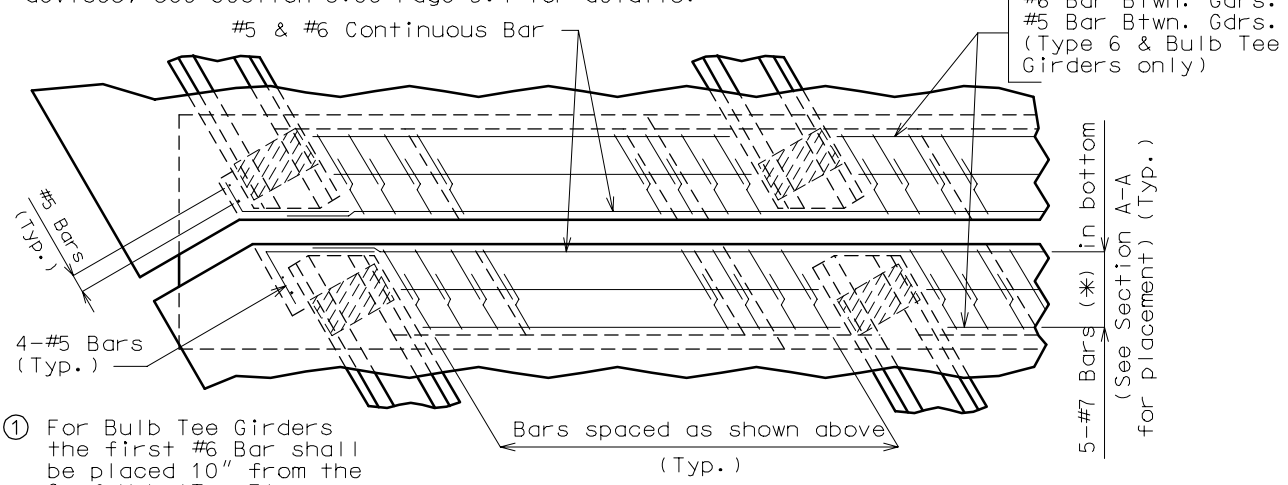

① For Bulb Tee Girders the first #6 Bar shall be placed 10" from the ℄ of Web (Top Flange will prevent some Bars from extending into the Slab).

PART PLAN NEAR INT. BENT

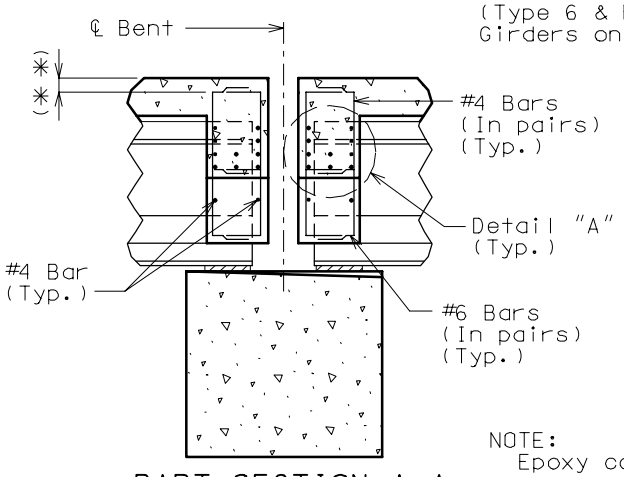

PART SECTION A-A

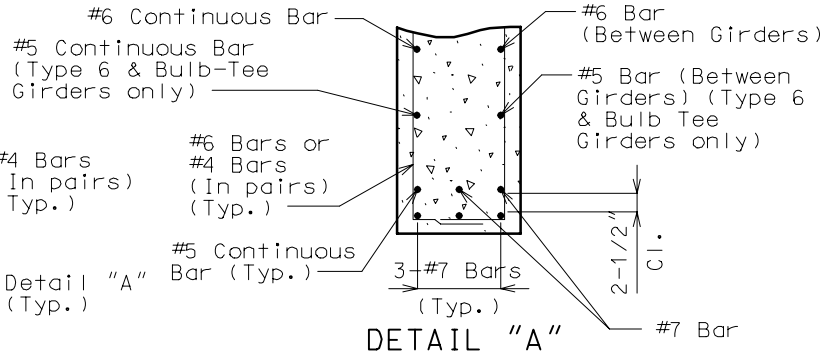

DETAIL "A"

(✳) See Detail "A" for the placement of reinforcement.

(✳✳) Use the same clearance as longitudinal slab steel.

NOTE:
Epoxy coat all reinforcing steel in the end diaphragms.

DIAPHRAGM REINFORCEMENT
FINGER PLATE EXPANSION DEVICE:

Details

GIRDER FULLY ENCASED IN DIAPHRAGM:

(NOTE: Use only when expansion device connects prestress girder series and steel girder series.)

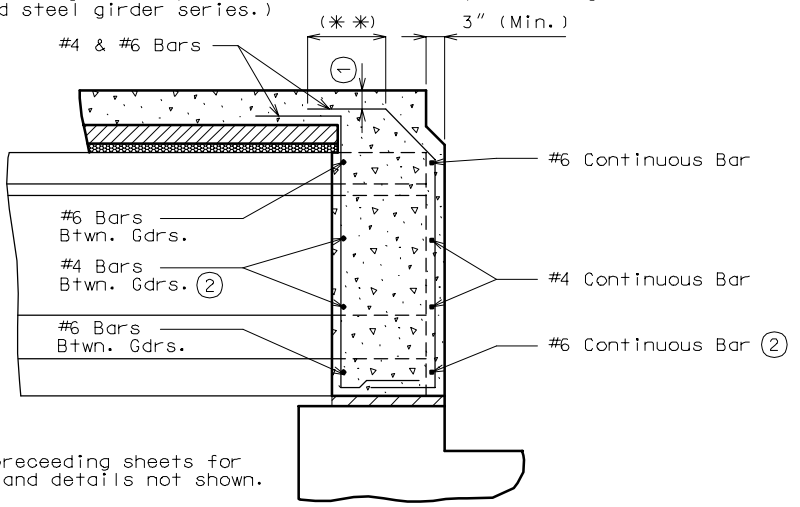

NOTE: See preceeding sheets for bar spacing and details not shown.

A protective coating shall be applied to concrete surface exposed to drainage from roadway. Indicate surface to be coated on plans. Epoxy coat all reinforcing steel in the end diaphragms.

2 For Bulb Tee Girders use 3-#4 Bars in each face.

NON-INTEGRAL TYPE DIAPHRAGM:

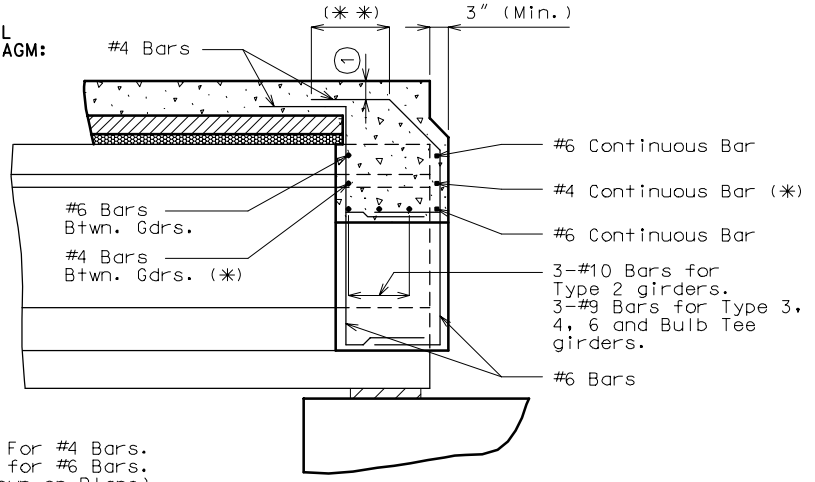

(✳✳) 12" For #4 Bars.
14" for #6 Bars.
(Shown on Plans)

(✳) Use only on Type 6 Girder

1 Use the same clearance as longitudinal slab steel.

SHEAR BLOCKS **Miscellaneous Details**

A minimum of two Shear Blocks 12″ wide x (1) high by width of diaphragm, will be detailed at effective locations on open diaphragm bent caps when adequate structural restraint cannot be provided for with anchor bolts.

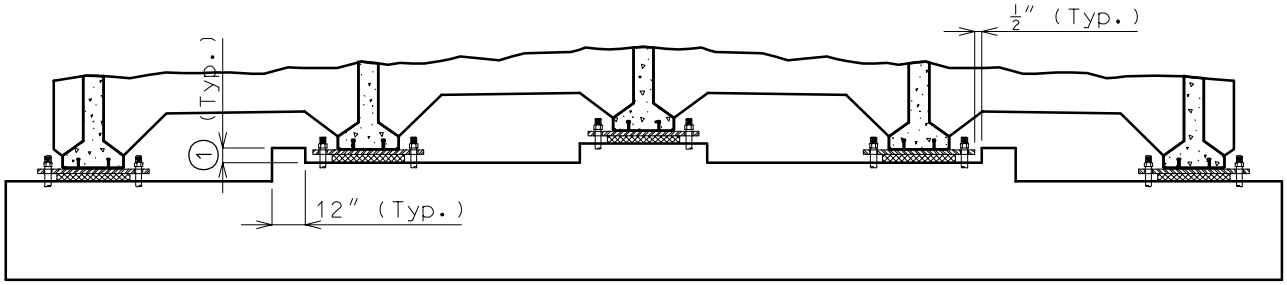

(1) Height of shear block shall extend a minimum of 1″ above the top of the sole plate.

NOTE: Shear blocks may be designed as shown on the following page.

SHEAR BLOCKS (CONT.)
DESIGN EXAMPLE

Miscellaneous Details

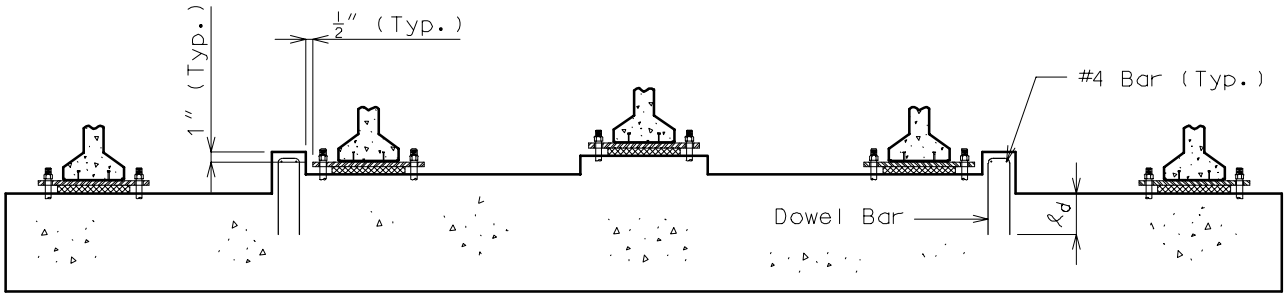

ELEVATION

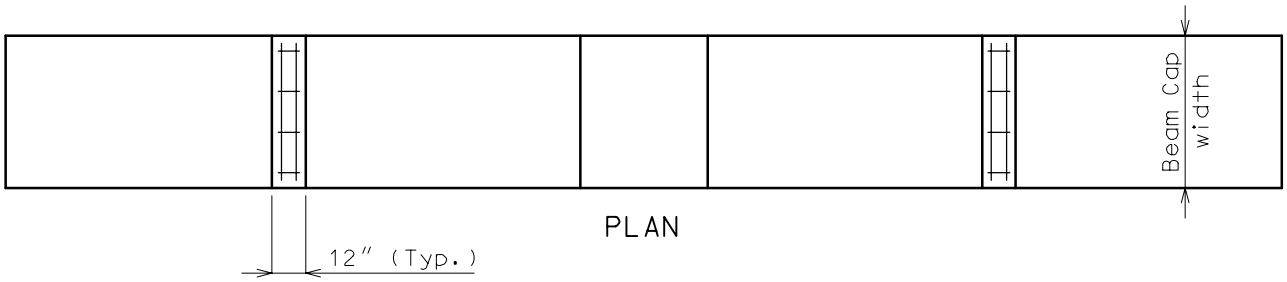

PLAN

Assumptions:

Shear blocks shall be used at bents with open diaphragms when anchor bolts can not be designed to resist earthquake loading. In such cases, the shear blocks shall be designed to resist the total earthquake load at the bent in each direction (anchor bolts are assumed to have failed).

Design method based on AASHTO 8.16.6.4 (LFD)

Let f'_c = 3000 psi f_y = 60,000 psi EQ = 200 kips

Shear Block width = 12"
length = 42"

Use #6 Bars for shear friction R/I (As = 0.44 in.^{2})

Design:

V_u = (EQ)/R where R = 0.8 V_u = (200 kips)/0.8 = 250 kips

$$V_n = \frac{V_u}{\phi} = \frac{250 \text{ kips}}{0.85} = 294 \text{ kips} \leq \begin{cases} 0.2\ f'_c\ A_{cv} = (0.2)(3 \text{ ksi})(12''\text{x}42'') = 302.4 \text{ kips} \\ 0.8\ A_{cv} = (0.8)(12''\text{x}42'') = 403.2 \text{ kips} \end{cases}$$

where A_{cv} is shear area of shear block

$$A_s = \frac{V_n}{(f_y)(\mu)} \text{ where } \mu = 1.4\ \lambda \text{ and } \lambda = 1.0 \quad \left(\text{Note: Use } \mu = 1.0\ \lambda \text{ for retrofits}\right)$$

$$A_s = \frac{294 \text{ kips}}{(60 \text{ ksi})(1.4)} = 3.5 \text{ in.}^2$$

$$\text{Number of bars req'd} = \frac{3.5 \text{ in.}^2}{(2)(0.44 \text{ in.}^2)} = 3.98 \text{ bars}$$

Use 4-#6 Bars for each shear block with ℓ_d = 16"

NOTE: Same procedure is valid for closed diaphragms at expansion bents.

BENT STEPS

Miscellaneous Details

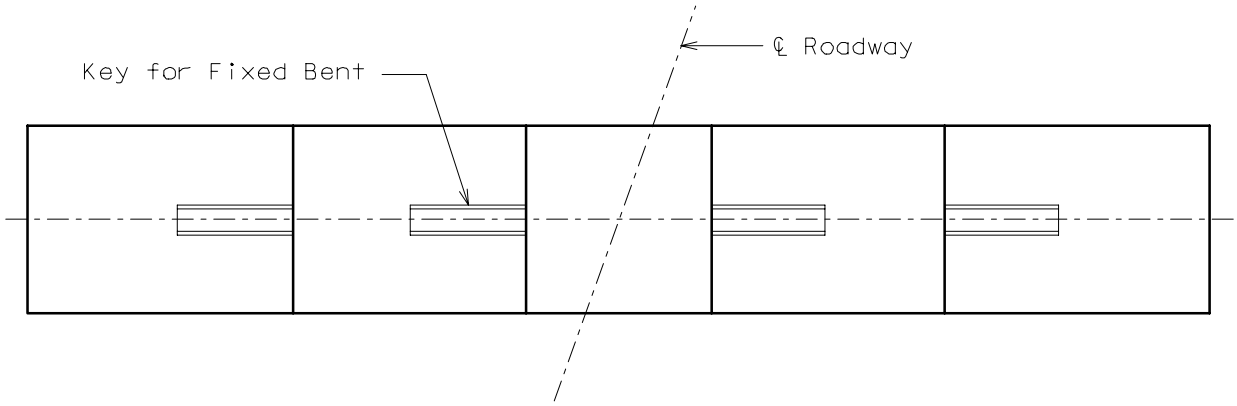

FIXED BENTS AND EXPANSION
BENTS WITH OPEN DIAPHRAGMS

NOTE: For Fixed Bents and Expansion Bents with open diaphragms, the steps or haunches and end of keys (when applicable) should be normal to the length of cap.

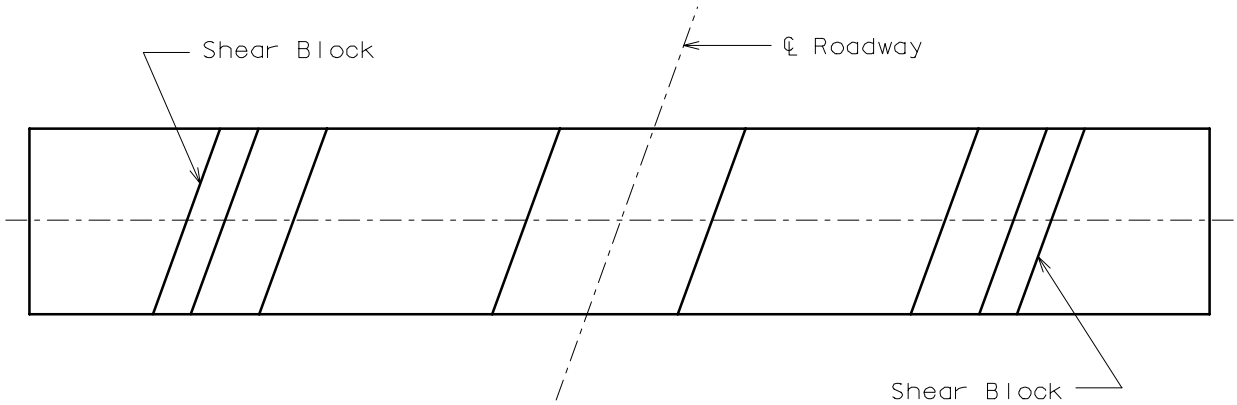

EXPANSION BENTS WITH
CLOSED DIAPHRAGMS

NOTE: For Closed Diaphragm Expansion Bents, the steps or haunches shall be detailed parallel to the centerline of roadway.

For Integral End Bents the steps may be skewed due to stirrups being placed parallel to centerline of roadway.

Shear Blocks for Expansion Bents with Closed Diaphragms shall be detailed parallel to the centerline of roadway. Shear Blocks used in conjunction with sole plates and anchor bolts shall be detailed parallel to the edge of sole plate.

ANCHOR BOLTS
SIMPLE SPANS

Miscellaneous Details

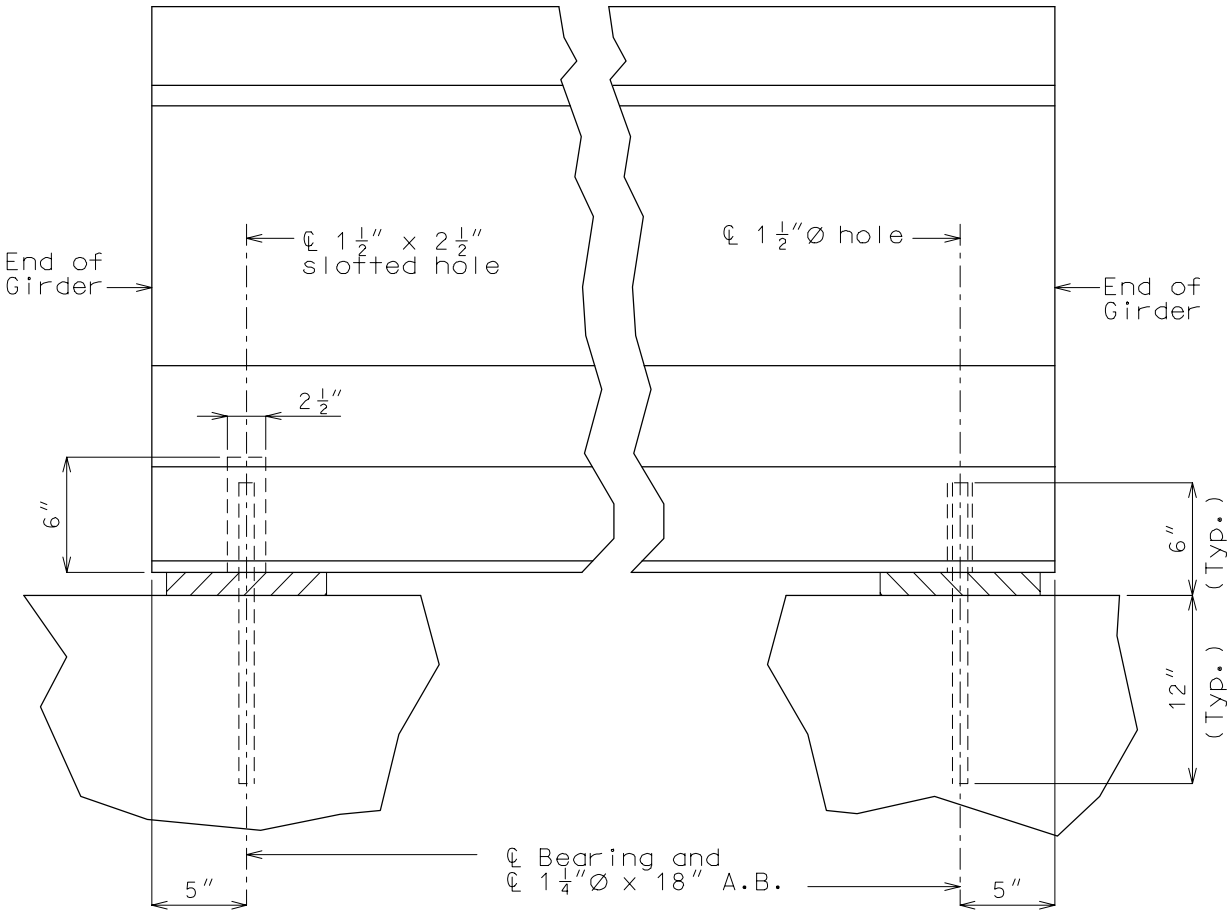

PART ELEVATION

Note:

It is permissible for the reinforcing bars and or the strands to come in contact with the materials used in forming A.B. holes.

If A.B. holes are formed with galvanized sheet metal, the forms may be left in place.

Hole (1½"Ø) to be grouted with expansive type mortar meeting the requirements of Section 1066 of Standard Specifications.

DOWEL BARS

Miscellaneous Details

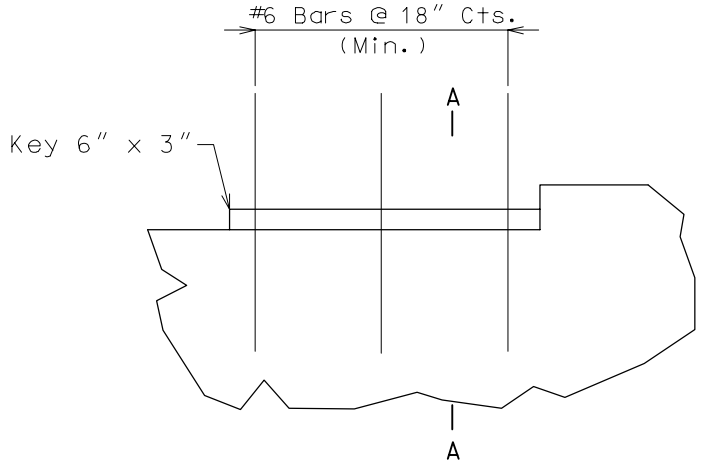

PART ELEVATION
(FIXED BENT) (✳)

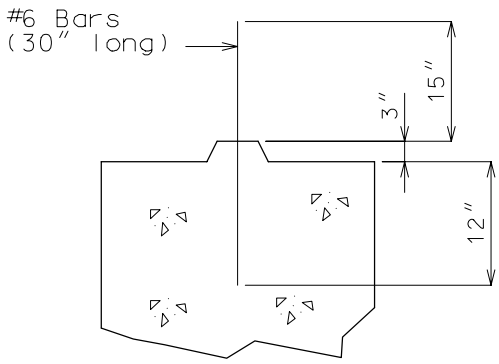

SECTION A-A (✳)

(✳) Details shown are for SPC A and B only.

Dowel bars shall be used for all fixed intermediate bents under prestressed superstructures.

Seismic Performance Category A:

Use #6 Bars @ 18″ Cts. for dowel bars.

Seismic Performance Category B:

Dowel bars shall be determined by design.
(#6 Bars @ 18″ Cts. minimum)

Design dowel bars for shear using service load design.

Allowable stresses are permitted to increase by 33.3% for earthquake loads.

Seismic Performance Categories C & D:

See Structural Project Manager.

VENT HOLES

Miscellaneous Details

Note: Use vent holes on all stream crossing structures.

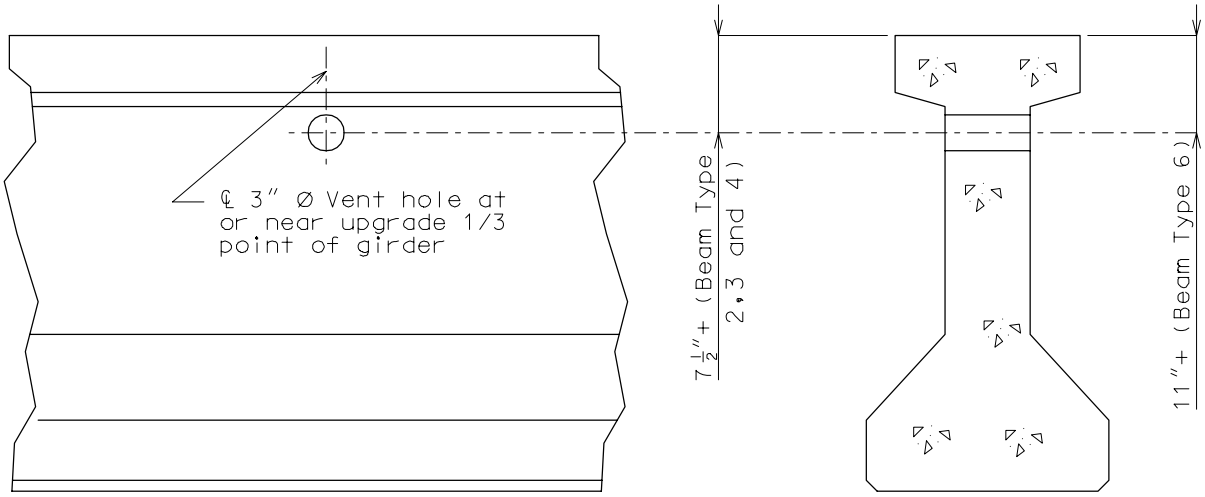

PART ELEVATION OF GIRDER

PART SECTION NEAR VENT HOLE

Note: Place vent holes at or near upgrade 1/3 point of girders and clear reinforcing steel or strands by 1-1/2" minimum and steel intermediate diaphragms bolt connection by 6" minimum.

EXPANSION DEVICE SUPPORT SLOTS **Miscellaneous Details**

Used with preformed compression joint seal, flat plate, strip seal or finger plate expansion devices.

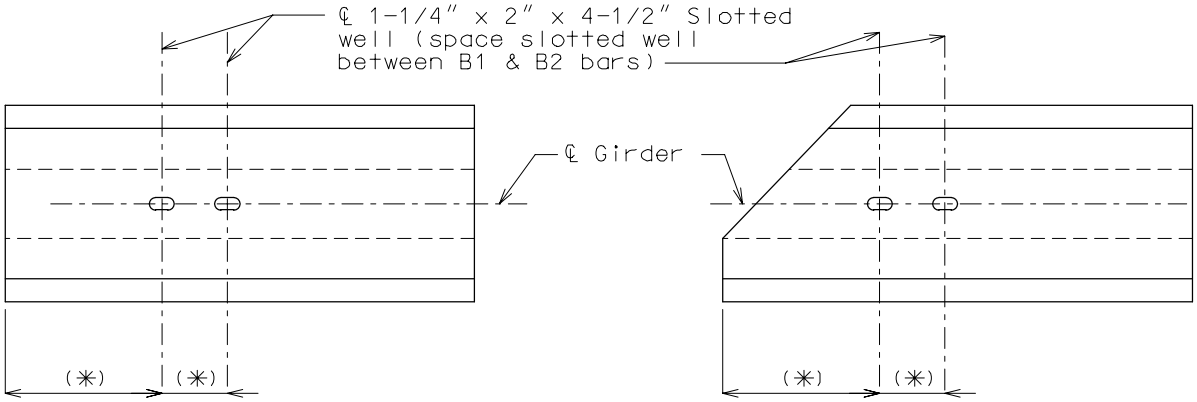

PART PLAN OF P/S CONC. I-GIRDER @ EXP. DEVICE END

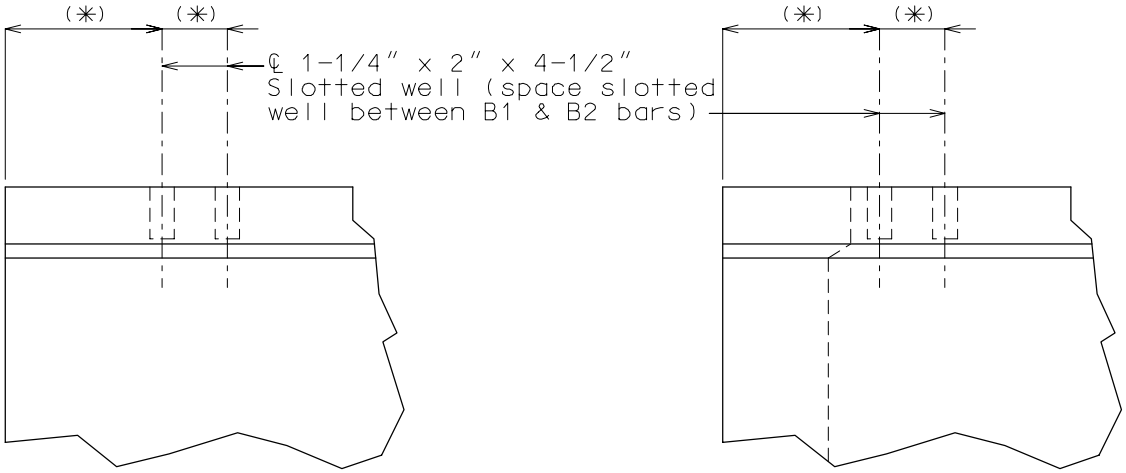

PART ELEVATION OF P/S CONC. I-GIRDER @ EXP. DEVICE END

(✳) Show these dimensions on the P/S concrete girder sheet.

TIE ROD DETAILS AND LOCATIONS

Precast Prestressed Concrete Box Girders

Note: 1"Ø Tie rods, sleeves and nuts shall be A307.

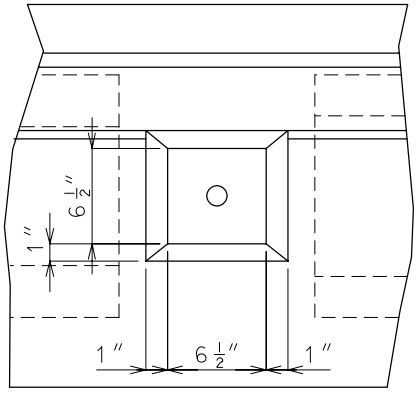

ELEVATION

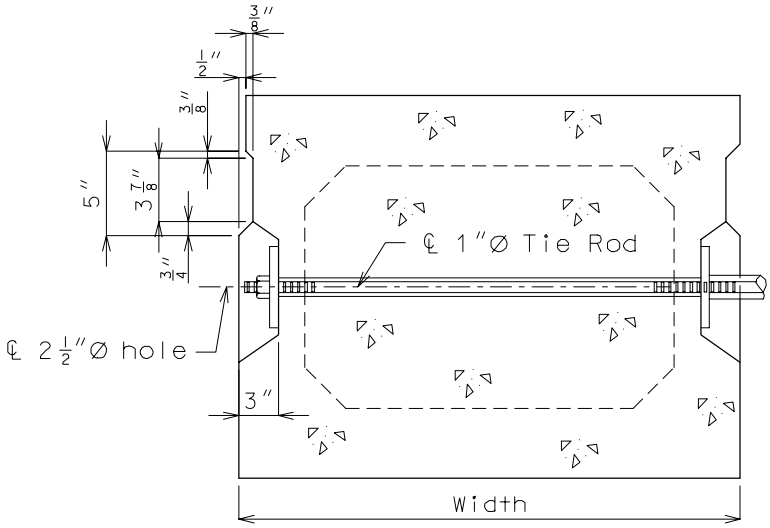

SECTION @ ℄ TIE ROD
EXTERIOR GIRDER

Tie Rod: 1"Ø x (width girder -1") with 4" thread each end.
Sleeves: 1"Ø x 5" full threaded hex sleeve.
Washer Plates: 5" x 5" x 1/2" Plate with 1-1/8"Ø hole.
Nut: 1"Ø American Std. Heavy Hex Nut.

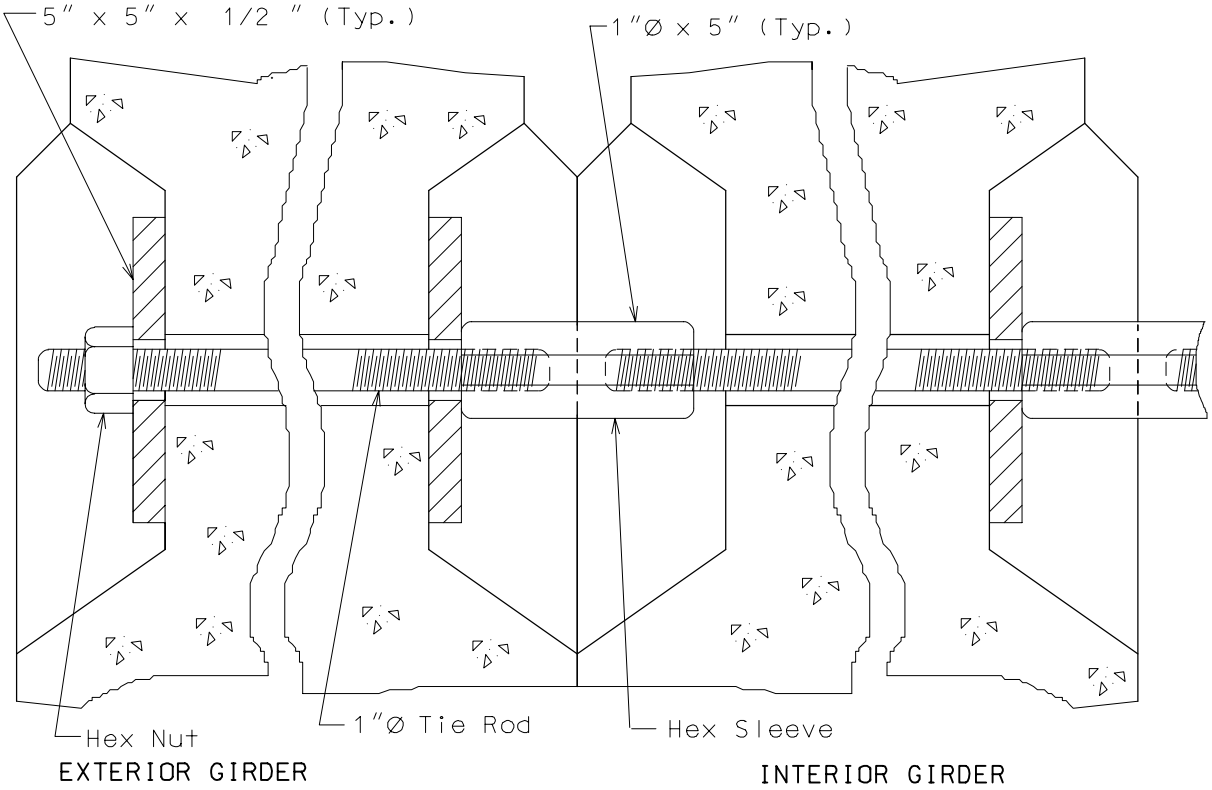

SECTION THRU 1"Ø TIE ROD

TIE ROD DETAILS AND LOCATIONS (CONT.)

Precast Prestressed Concrete Box Girders

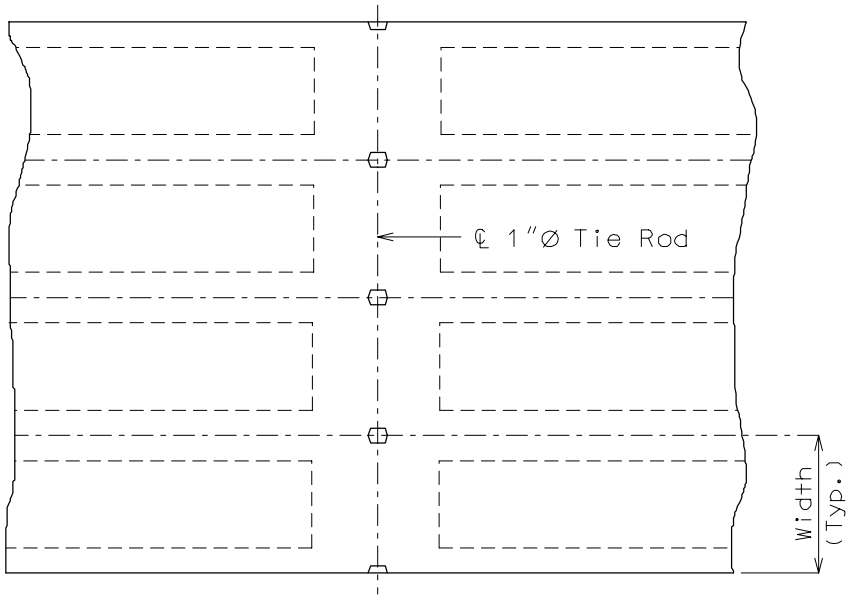

SQUARE BRIDGES

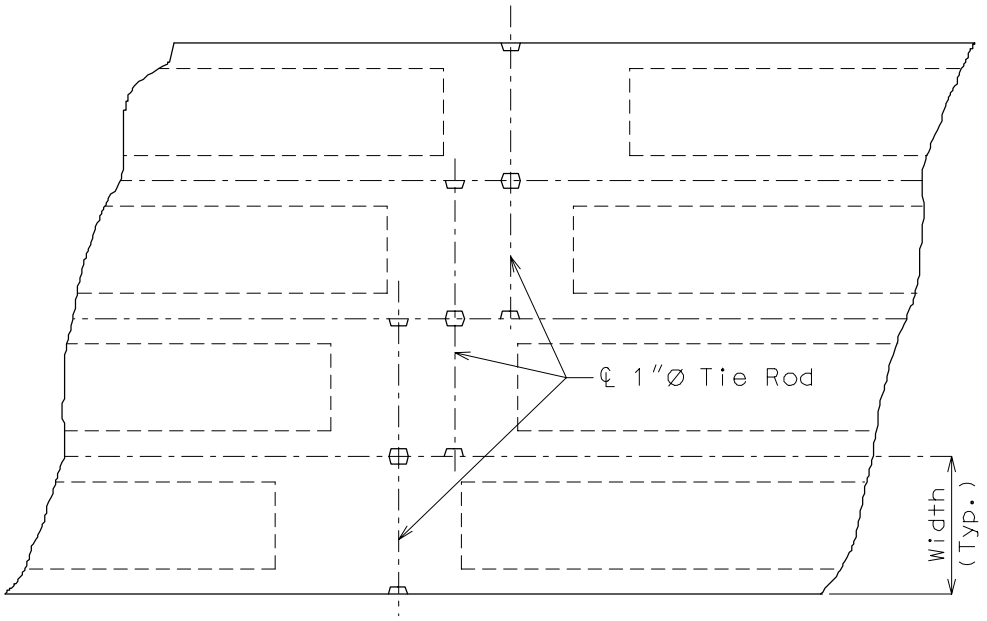

SKEWED BRIDGES