THIS DRAWING FOR USE WITH OFF-SYSTEM PROJECTS ONLY.

Note: This system meets TL-2 bridge barrier railing requirements.

State	Proj. No.	Sheet No.
MO		
SEC/SUR	TWP	RGE

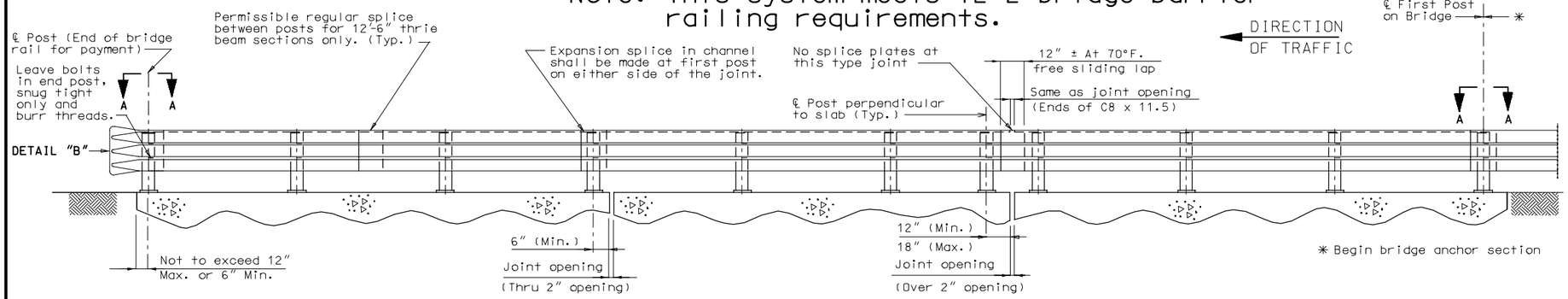

Note: At the bridge ends for two-way pavement, use guard rail at all four corners and for divided pavement, use a guard rail at entrance ends only (unless required at exit end for high fill).

PART SECTION THRU SLAB SHOWING THRIE BEAM RAIL

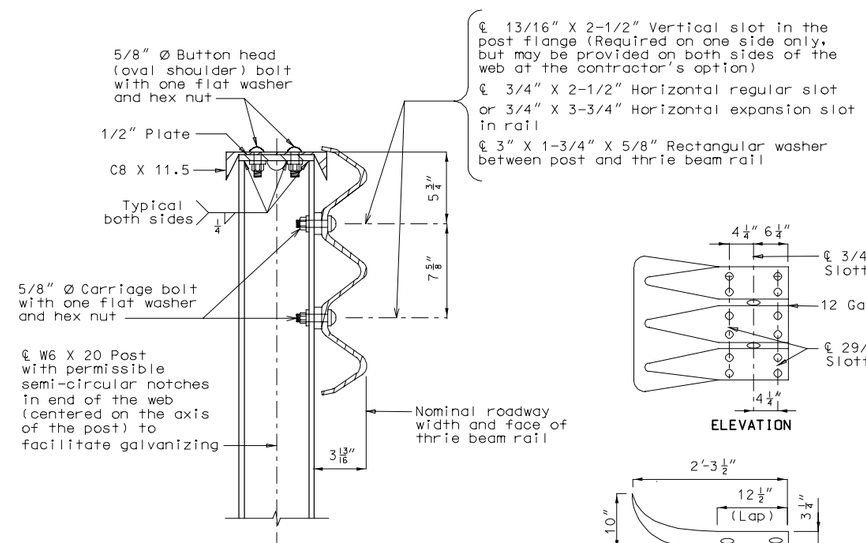

PART SECTION AT RAIL POST

DETAIL "B"

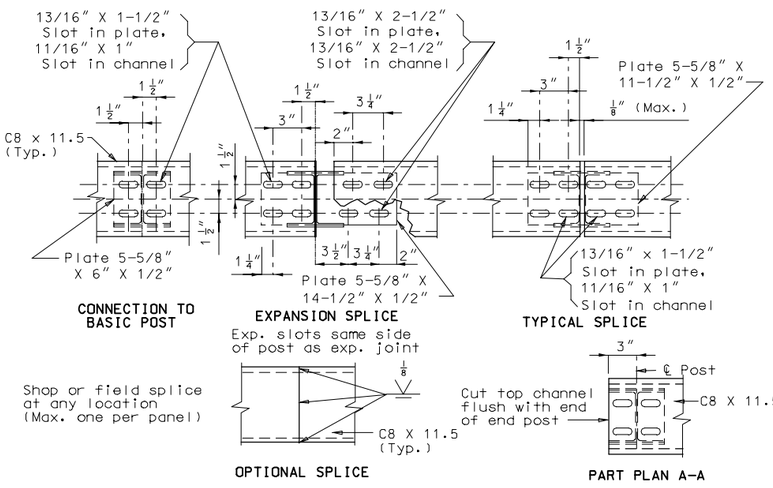

CHANNEL MEMBER DETAILS

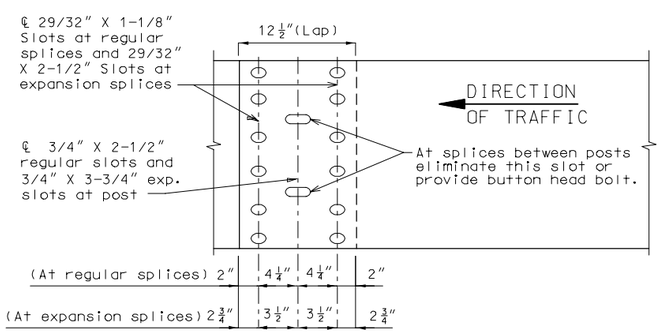

THRIE BEAM RAIL SPLICE DETAILS

ESTIMATED QUANTITIES	
ITEMS	TOTAL

GENERAL NOTES:

Design specifications: AASHTO-1996 and Interims thru 1999.

Panel lengths of channel members shall be attached continuously to a minimum of four posts and a maximum of six posts (except at end bents).

All bolts, nuts, washers and plates are considered as parts of the thrie beam rail for payment.

All steel connecting bolts and fasteners for posts and railing and all anchor bolts, nuts, washers and plates shall be galvanized after fabrication. For protective coating and material requirement of steel railing, see Section 1040 of the Missouri Standard Specifications.

Rail posts shall be set perpendicular to roadway profile grade and vertically in cross section, and aligned according to Section 713 of the Missouri Standard Specifications, except that the rail posts shall be aligned by the use of shims so that in the final adjustment no part shall deviate more than one inch from true horizontal alignment. The shims shall be 3" X 12 3/4" and placed between the post and the thrie beam rail. The thickness of the shims shall be determined by the contractor and verified by the engineer before ordering material for this work.

At the expansion slots in the thrie beam rails and channels, tighten bolts, back off one-half turn and burr threads.

At the thrie beam connection to posts on wings, tighten bolts, back off one-half turn and burr threads.

Minimum length of thrie beam sections is equal to one post space.

Use 5/8" Ø button-head, oval shoulder bolts with hex nuts at all slots (Thickness of hex nuts = 3/8" min.).

Thrie beam guard rail on the bridge shall be made of steel and shall be 12 Gage.

Posts, top plates, channels and channel splice plates shall be fabricated from ASTM A709 Grade 36 steel and galvanized.

Washers shall be used at all post bolts (between the bolt head and beam). They shall be rectangular in shape (3" X 1-3/4" X 3/16" min.) and flat with a 11/16" X 1" slot, or when necessary of such design as to fit the contour of the beam. (Use a 3" X 1-3/4" X 5/8" rectangular washer between the post and the thrie beam rail.)

Special drilling of the thrie beam may be required at the splices. (All drilling details are to be shown on the shop drawings.)

Fabrication of structural steel shall be in accordance with Section 712 of the Missouri Standard Specifications.

Expansion splices in the thrie beam rail shall be made at either the first or second post on either side of the joint and on structure at bridge ends. When the splice is made at the second post, an expansion slot shall be provided in the thrie beam rail for connection to the first post to allow for movement.

In addition to the expansion provisions at these expansion joints, expansion splices in the thrie beam rail and the channel shall be provided at other locations so that the maximum length without expansion provisions does not exceed 200 ft.

Contractor shall verify all dimensions in field before ordering materials.

Shim plates 6" X 6" X 1/16" may be used between the top of post and the channel member as required for vertical alignment.

See Missouri Standard Plans Drawing 606.00 for details not shown. See slab sheet for rail post spacing.

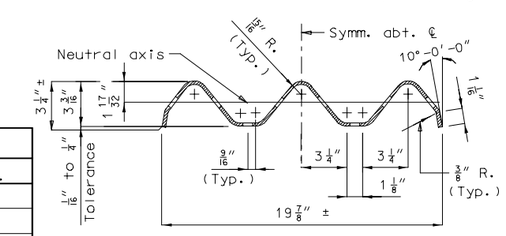

SECTION THRU THRIE BEAM RAIL

Converted

B.M.

BRIDGE

STATE ROAD

ABOUT

PROJECT NO. STA.

JOB NO. RTE.

COUNTY

Date: / /

STD.
STD.
STD.
STD.
THBOS 1

Designed
Detailed
Checked

Note: This drawing is not to scale. Follow dimensions.

Sheet No. of