State	Proj. No.	Sheet No.
MO		

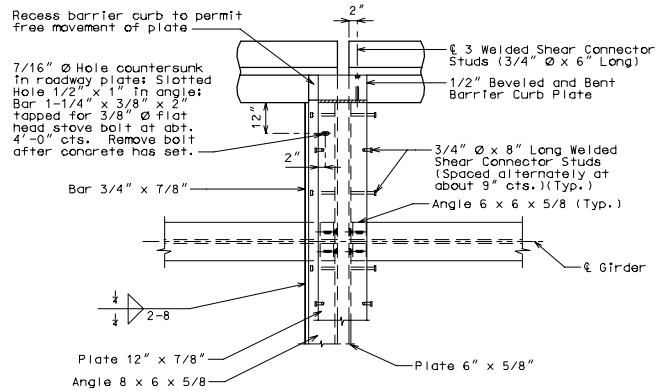

PART PLAN

Note: Concrete vent holes not shown for clarity.

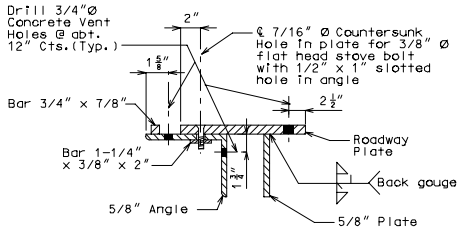

PART SECTION (TYPICAL)

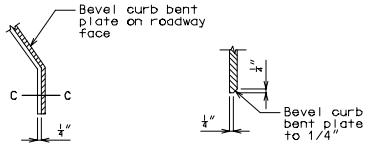

PART ELEVATION AT END OF BEVELED CURB BENT PLATE

SECTION C-C

GENERAL NOTES:

Expansion device shall be fabricated in one section, except for stage construction and when the length is over 50 feet, splicing is permissible. The expansion device shall be bent to conform to crown of roadway.

Material for the expansion device shall be ASTM A709 Grade 36 structural steel. Anchors for the expansion device shall be approved stud-welded anchors (C1010 thru C1020).

Structural steel for the expansion device and curb plate shall be coated with a minimum of two coats of inorganic zinc primer (5 mils minimum) or galvanized in accordance with ASTM A123. Anchors need not be protected from overspray.

Use 2-layers of 50# roofing felt between the sliding contact surface of beveled barrier curb bent plate and concrete barrier curb.

Plan dimensions are based on installation at 60°F. The expansion gap and other dimensions shall be increased for each 10° fall and decreased for each 10° rise in temperature at installation.

Furnishing, coating or galvanizing and installing the expansion device and barrier curb plates shall be included in the contract unit price for Flat Plate Expansion Device.

Concrete shall be forced under and around flat plate, studs and angles. Proper consolidation and finishing of the concrete shall be achieved by hand finishing within one foot of the expansion device. The vertical and horizontal concrete vent holes shall be offset from each other. Do not alternate holes at the 12" spacing.

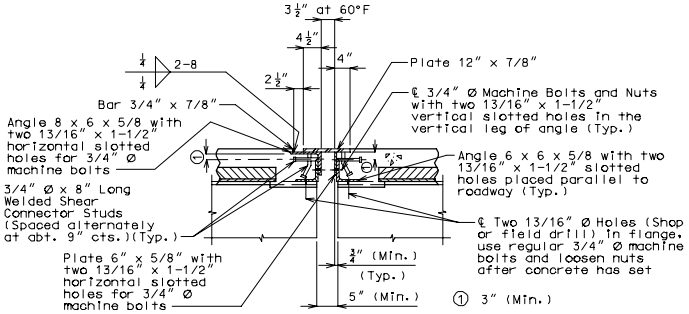

PART SECTION AT INTERMEDIATE BENT

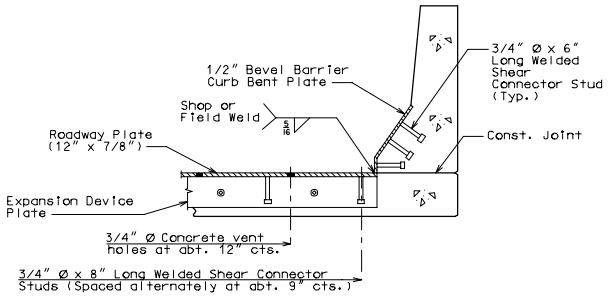

PART SECTION A-A

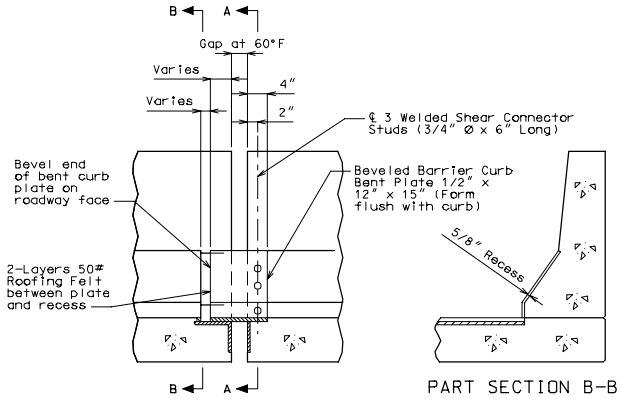

ELEVATION OF BARRIER CURB

PART SECTION B-B

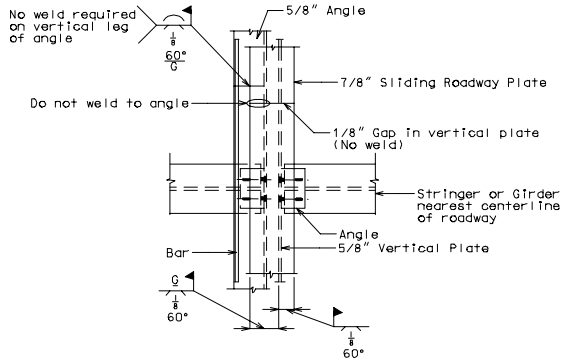

PERMISSIBLE FIELD SPLICE AT INT. BENT

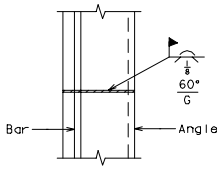

PART PLAN OF ANGLE AND BAR

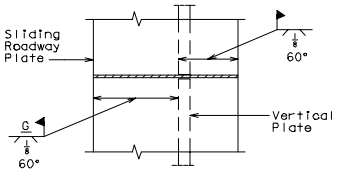

PART PLAN ROADWAY PLATE AND VERTICAL PLATE

DETAILS OF FLAT PLATE EXPANSION DEVICE AT INT. BENT NO.

CREATED IN MICROSTATION

Detailed
Checked

Note: This drawing is not to scale. Follow dimensions.

Sheet No. of

COUNTY

FPE 24