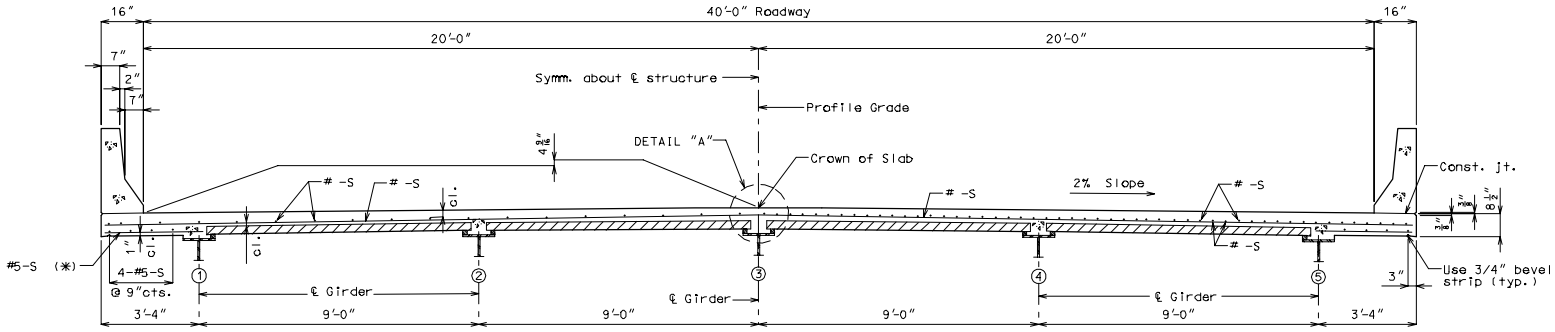

40'-0" ROADWAY - 5 GIRDER (SYMM.)

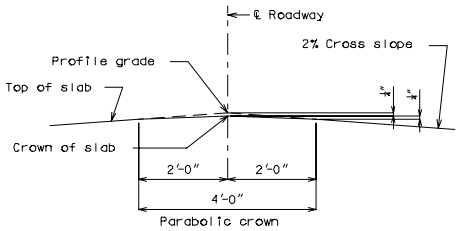

DETAIL "A"

(✱) Alternate bar shape available, see Safety Barrier Curb sheet.

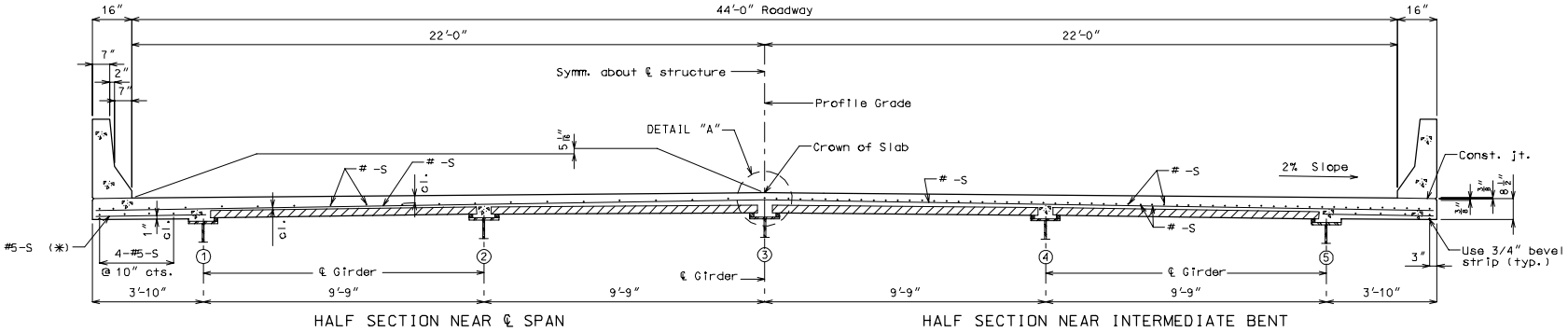

44'-0" ROADWAY - 5 GIRDER (SYMM.)