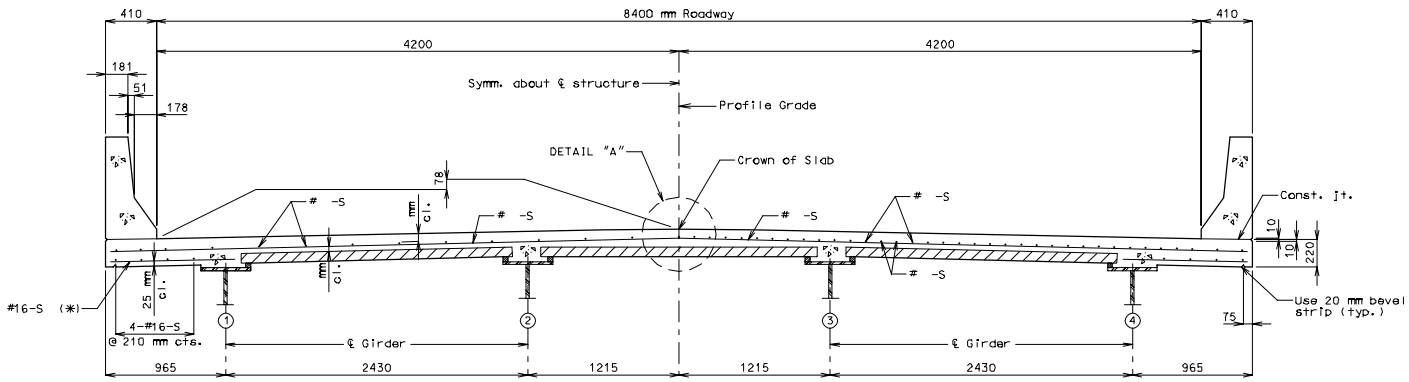

HALF SECTION NEAR ℄ SPAN

HALF SECTION NEAR INTERMEDIATE BENT

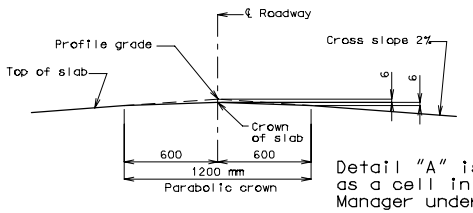

DETAIL "A"

Detail "A" is available as a cell in the Settings Manager under Slab Sheets.

8400 mm ROADWAY - 4 GIRDER WITH NEW 410 mm SBC
Cell available in Settings Manager under Slab Sheets
Cell: SLN1M
Created in scale: 20

(*) Alternate bar shape available, see Safety Barrier Curb sheet.

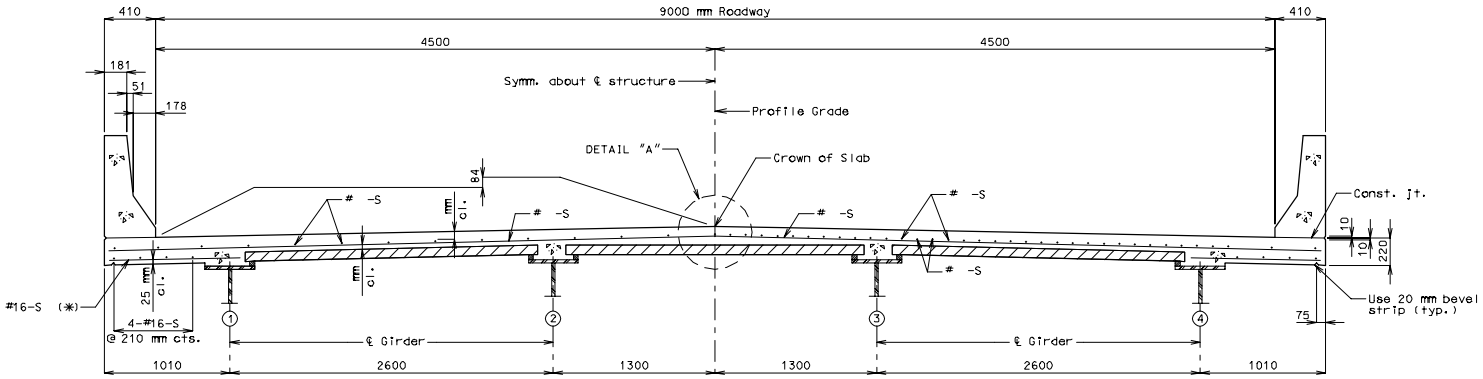

HALF SECTION NEAR ℄ SPAN

HALF SECTION NEAR INTERMEDIATE BENT

9000 mm ROADWAY - 4 GIRDER WITH NEW 410 mm SBC

Cell available in Settings Manager under Slab Sheets
Cell: SLN2M
Created in scale: 20