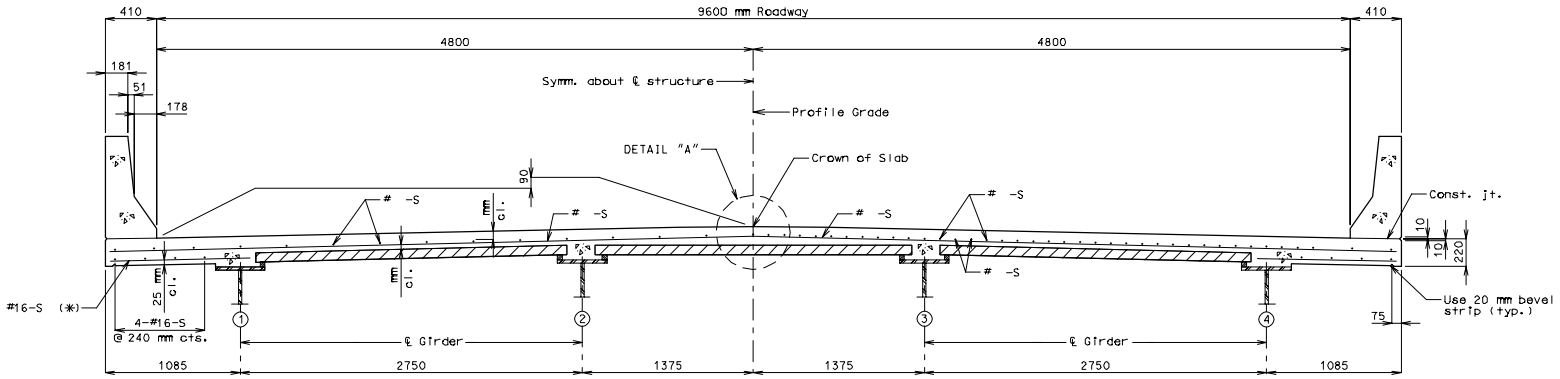

HALF SECTION NEAR ℄ SPAN

HALF SECTION NEAR INTERMEDIATE BENT

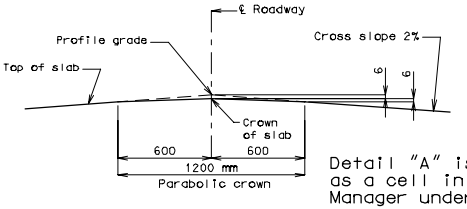

DETAIL "A"

Detail "A" is available as a cell in the Settings Manager under Slab Sheets.

9600 mm ROADWAY - 4 GIRDER WITH NEW 410 mm SBC
Cell available in Settings Manager under Slab Sheets
Cell: SLN3M

(*) Alternate bar shape available, see Safety Barrier Curb sheet.

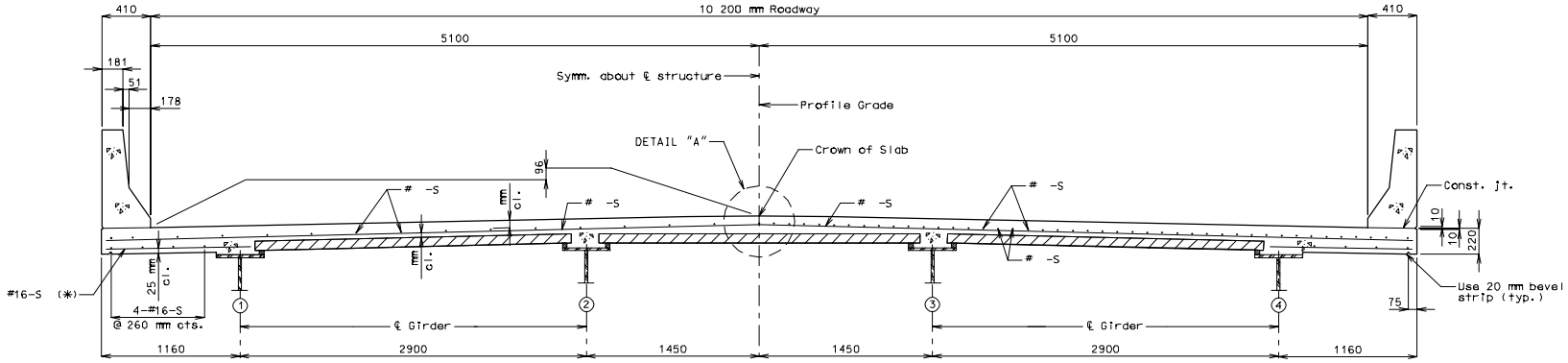

HALF SECTION NEAR ℄ SPAN

HALF SECTION NEAR INTERMEDIATE BENT

10 200 mm ROADWAY - 4 GIRDER WITH NEW 410 mm SBC
Cell available in Settings Manager under Slab Sheets
Cell: SLN4M