State	Proj. No.	Sheet No.
MO		

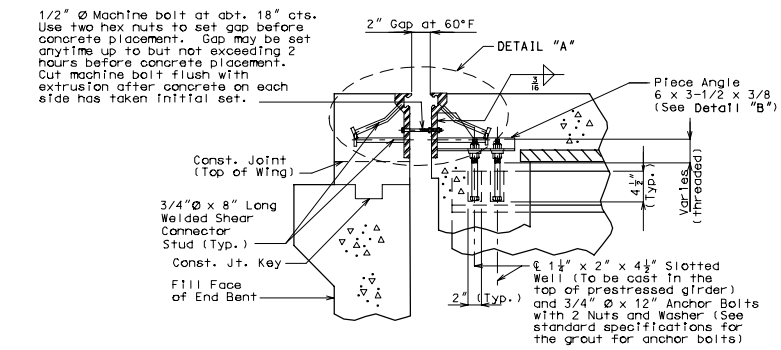

Note: Strip seal gland not shown for clarity.

SECTION A-A

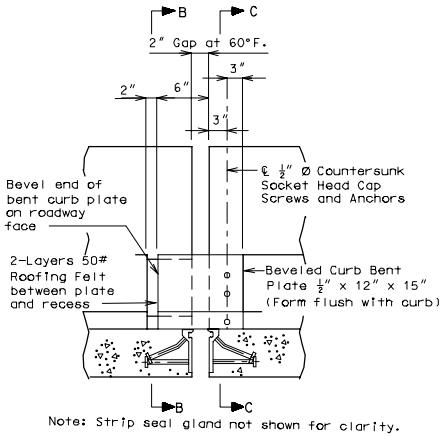

Note: Strip seal gland not shown for clarity.

PART ELEVATION OF BARRIER CURB

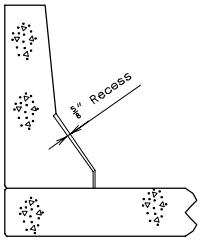

PART SECTION B-B

GENERAL NOTES:

The expansion device shall be fabricated and installed in accordance with the recommendations of the manufacturer, and as set forth in the Special Provisions.

The contractor must verify all dimensions prior to fabrication.

All welds shall conform to Section 712 of the Missouri Standard Specifications.

Splices of steel extrusion shall develop full strength.

All steel shall be ASTM A709 Grade 36, except steel extrusions shall be ASTM A709 Grade 50W or Grade 36.

Neoprene Strip Seal shall meet ASTM D-2628.

Anchors for the extrusions or armor shall be approved welded studs (C1010 thru C1020).

Structural steel for the expansion device and curb plate shall be coated with a minimum of two coats of inorganic zinc primer (5 mils minimum) or galvanized in accordance with ASTM A123. Anchors need not be protected from overspray.

Payment for furnishing, coating or galvanizing and placing steel extrusions, miscellaneous structural steel, barrier curb plates, and neoprene strip seal shall be made under the contract unit price for Strip Seal Expansion Device.

Plan dimensions are based on installation at 60°F. The gap shall be increased for each 10° fall in temperature and decreased for each 10° rise in temperature from the installation temperature.

Longitudinal reinforcing steel shall be placed so that ends shall not be more than 1"± from vertical leg of extrusion at Expansion Device.

Concrete shall be forced under and around strip seal extrusions and studs. Proper consolidation of the concrete shall be achieved by localized internal vibration.

Curb plate anchors shall be a drilled cone expansion or a cast-in-place wing type threaded insert. The minimum ultimate pullout capacity for these anchors shall be 2700 lbs in f'c = 4000 psi concrete. Lead anchors will not be permitted. Holes in the barrier curb for anchors shall not be drilled until the concrete is at least 7 days old.

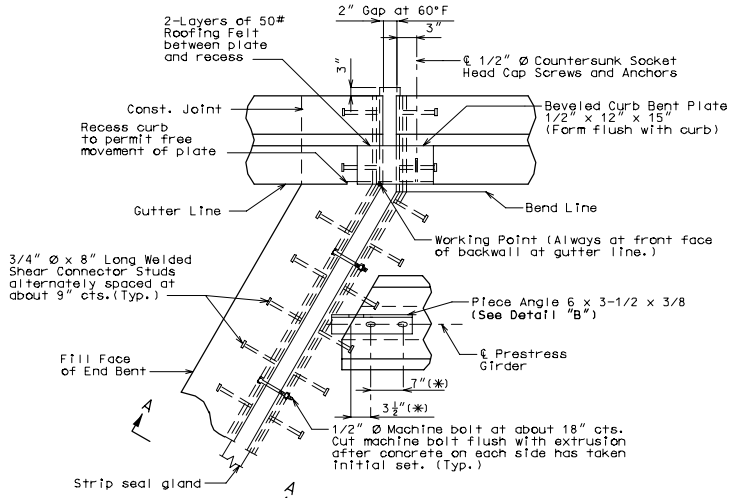

PART PLAN

(*) Dimension along ℄ Girder

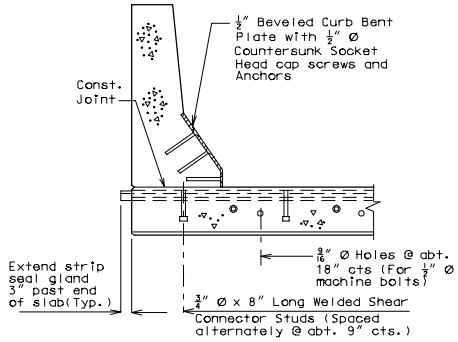

PART SECTION C-C

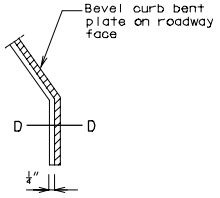

PART ELEVATION AT END OF BEVELED CURB BENT PLATE

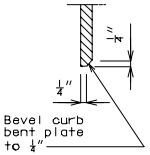

SECTION D-D

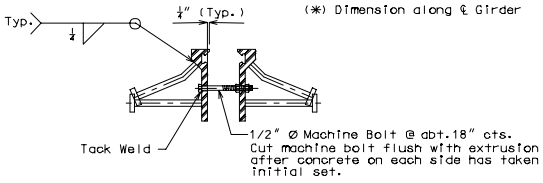

DETAIL "A"

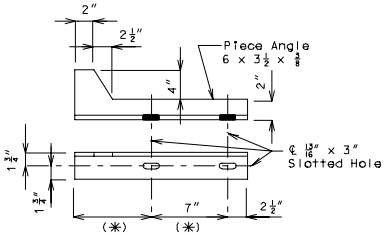

DETAIL "B"

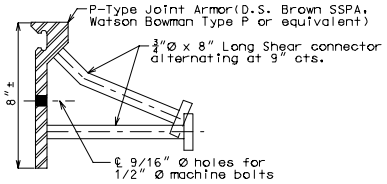

DETAIL OF JOINT ARMOR

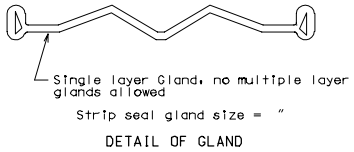

DETAIL OF GLAND

CREATED IN MICROSTATION

DETAILS OF STRIP SEAL AT END BENT NO.

Detailed
Checked

Note: This drawing is not to scale. Follow dimensions.

Sheet No. of

COUNTY