State	Proj. No.	Sheet No.
MO		

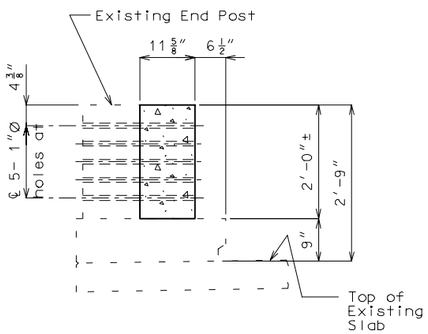

PART SECTION THRU ENDPOST
SHOWING HOLE SPACING
(REINFORCEMENT NOT SHOWN FOR CLARITY)

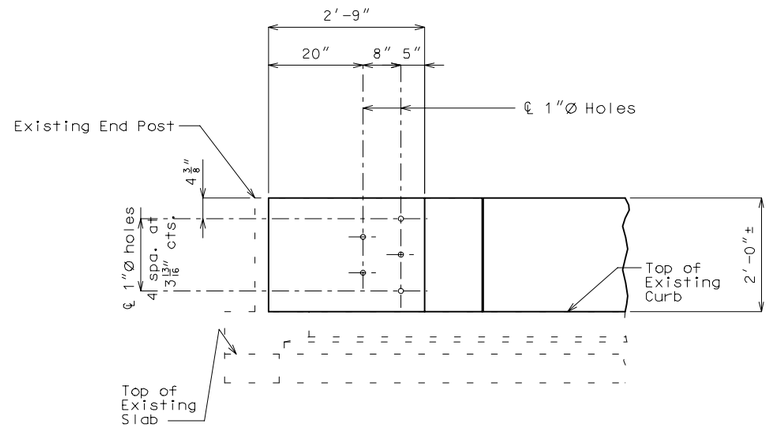

PART SECTION NEAR ENDPOST
SHOWING HOLE SPACING
(REINFORCEMENT NOT SHOWN FOR CLARITY)

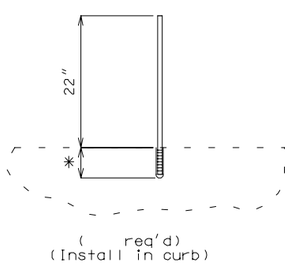

DETAIL OF VERTICAL
RESIN ANCHOR SYSTEM

* Manufacturer's embedment length

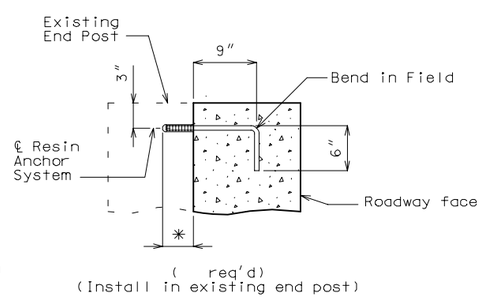

DETAIL OF HORIZONTAL
RESIN ANCHOR SYSTEM

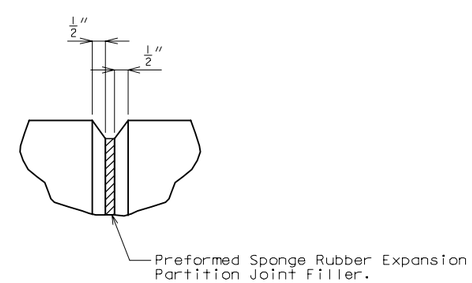

FILLED JOINT DETAIL

DETAILS OF CURB BLOCKOUT AT END BENTS

Detailed
Checked

Note: This drawing is not to scale. Follow dimensions.

Sheet No. of

COUNTY MISC3