State	Proj. No.	Sheet No.
MD		

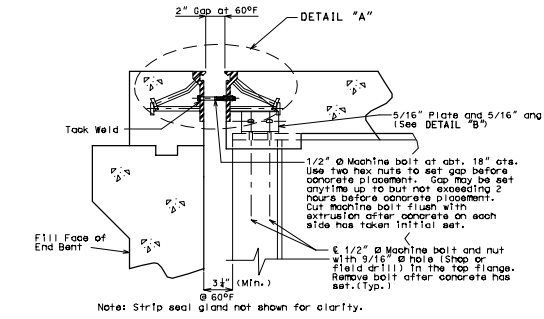

SECTION A-A

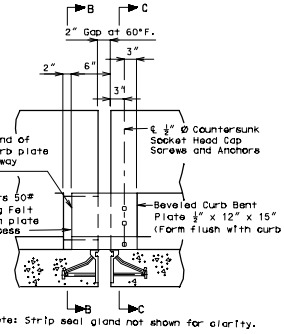

PART ELEVATION OF BARRIER CURB

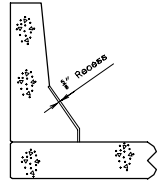

PART SECTION B-B

GENERAL NOTES:

Expansion joint system shall be fabricated in one section, except for stage construction and when the length is over 50 feet. A complete joint penetration groove welded splice shall be required. Welds shall be ground flush to provide a smooth surface. The expansion joint system shall be fabricated and installed to the crown and grade of the roadway.

Structural steel for the expansion joint system shall be ASTM A709 Grade 36 except the steel armor may be ASTM A709 Grade 50W. Anchors for the expansion joint system shall be in accordance with Sec 1037. Strip seal expansion joint system shall be in accordance with Sec 717.

Structural steel for the expansion joint system and curb plate shall be coated with a minimum of two coats of inorganic zinc primer (5 mils minimum) or galvanized in accordance with ASTM A123. Anchors need not be protected from overspray.

Plan dimensions are based on installation at 60°F. The expansion gap and other dimensions shall be increased or decreased " for each 10° rise or fall in temperature at installation.

Longitudinal reinforcing steel shall be placed so that ends shall not be more than ±1" from vertical leg of the steel armor at the expansion joint system.

Concrete shall be forced under and around steel armor and anchors. Proper consolidation of the concrete shall be achieved by localized internal vibration.

Curb plate anchors shall be a drilled cons expansion or a cast-in-place wing type threaded insert. The minimum ultimate pullout capacity for these anchors shall be 2700 lbs in f'c = 4000 psi concrete. Lead anchors will not be permitted. Holes in the barrier curb for anchors shall not be drilled until the concrete is at least 7 days old.

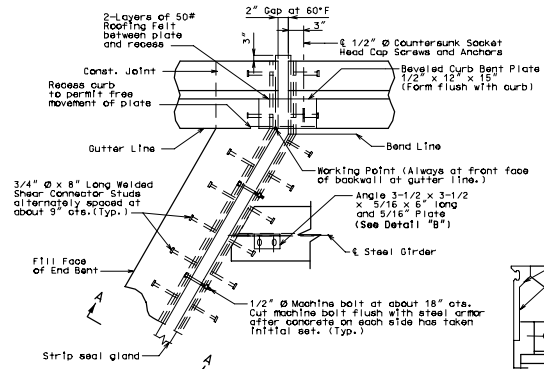

PART PLAN

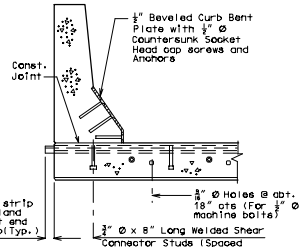

PART SECTION C-C

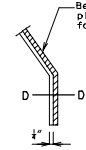

PART ELEVATION AT END OF BEVELED CURB BENT PLATE

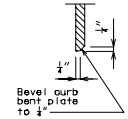

SECTION D-D

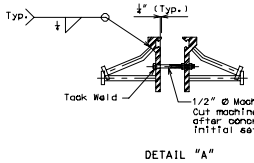

DETAIL "A"

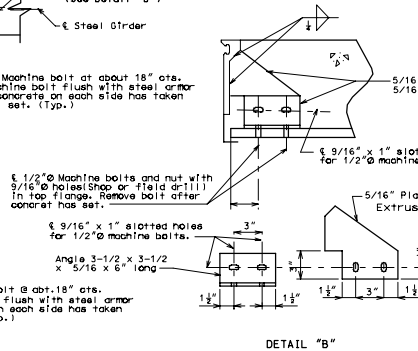

DETAIL "B"

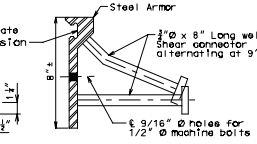

DETAIL OF JOINT ARMOR

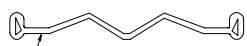

Single layer Gland, no multiple layer glands allowed

Strip seal gland size = "

DETAIL OF GLAND

CREATED IN MICROSTATION

DETAILS OF STRIP SEAL AT END BENT NO.

Detailed
Checked

Note: This drawing is not to scale. Follow dimensions.

Sheet No. of

COUNTY STS03