State	Proj. No.	Sheet No.
MD		

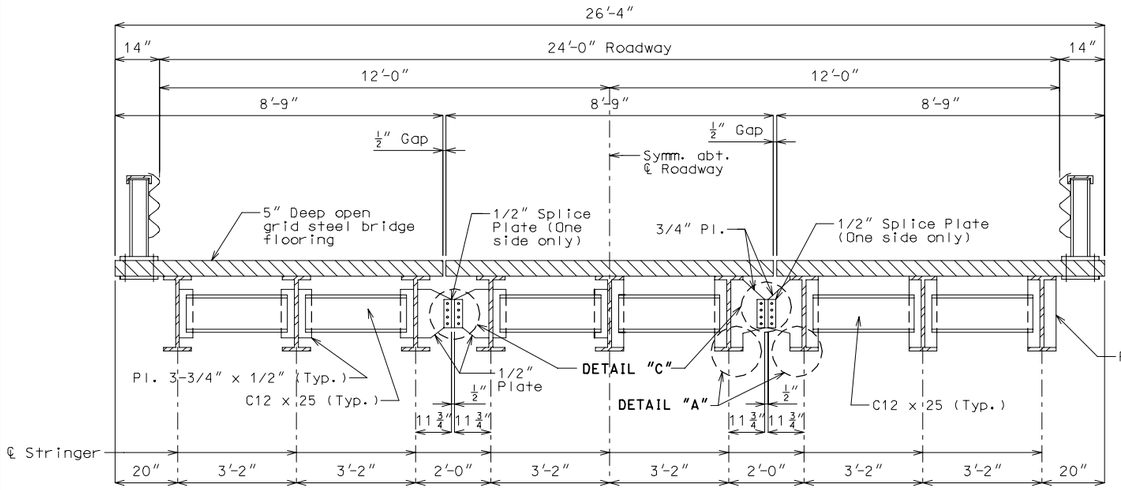

HALF SECTION NEAR INT. DIAPH.

HALF SECTION NEAR BENTS

Steel bridge flooring shall be Foster 5" RB/8.0 or American Bridge 5" Open I-Beam-Lok Type 8S open steel bridge flooring. Trim bars will be required at the sides and ends of each 39'-10-1/2" unit.

Note:
Field connections, high strength bolts 7/8" Ø, holes 1-1/16" Ø, except as noted.

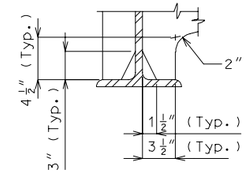

DETAIL "A"

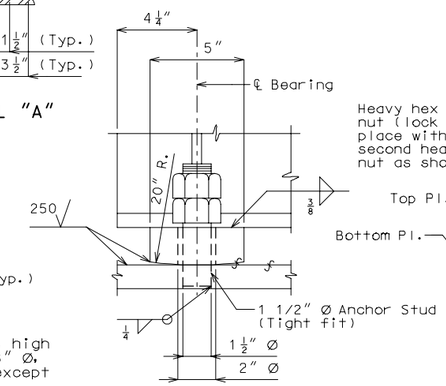

SIDE VIEW

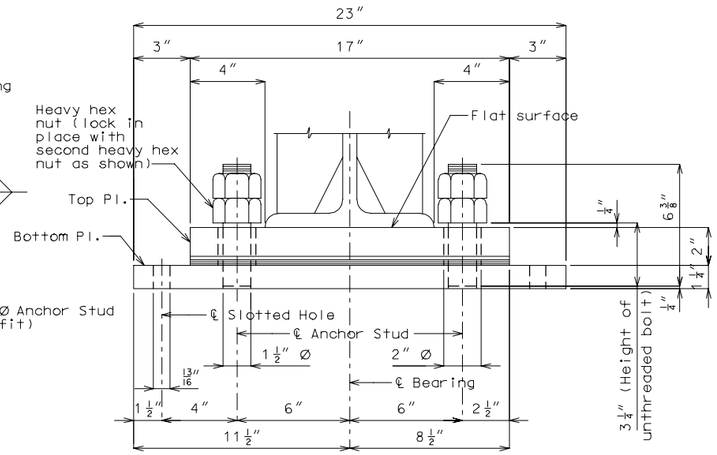

END VIEW

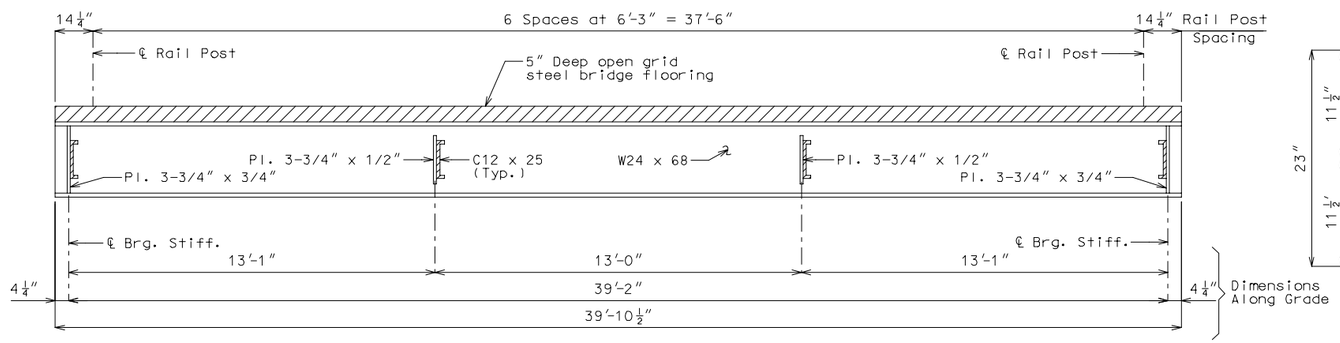

LONGITUDINAL SECTION - ALL SPANS

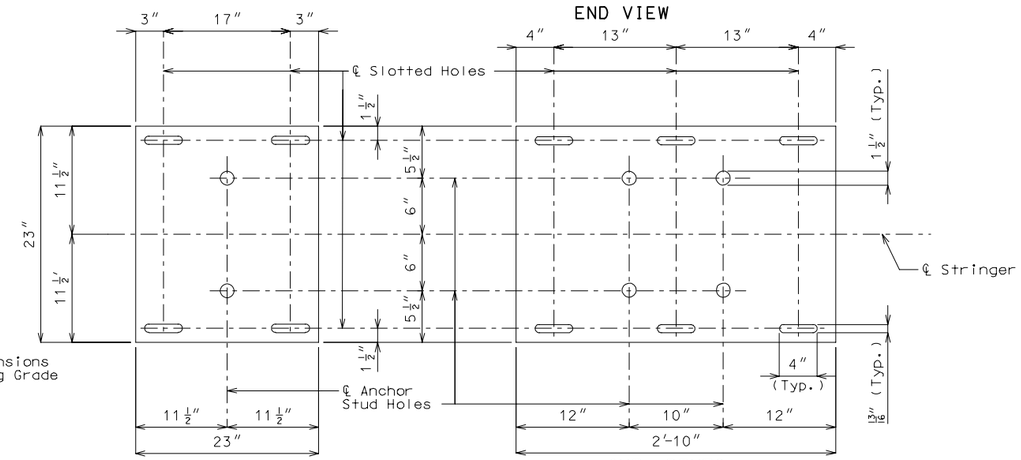

END BENTS

INT. BENTS

PLAN OF BOTTOM PLATES

DETAILS OF BEARINGS

NO. REQUIRED

XX Top plates
XX Bott. plates (Int. Bents)
XX Bott. plates (End Bents)

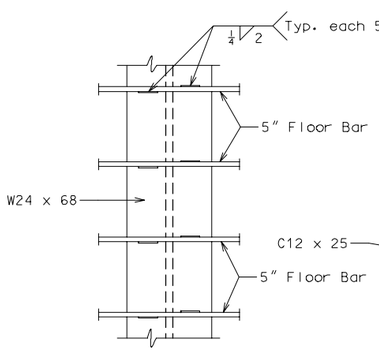

FLOORING TO STRINGER CONNECTION

(Typical Connection of Each Stringer)

Cross bars of steel grid floor are not shown for clarity.

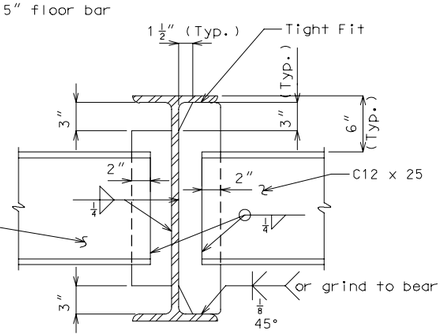

INT. DIAPH. BEARING STIFF.

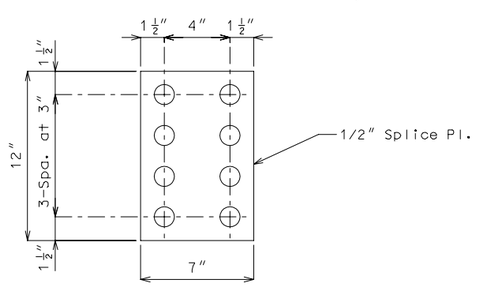

DETAIL "C"

Note: All superstructure structural steel, except Thrie Beam Rail assembly and structural tubing shall be ASTM A709 Grade 50W.

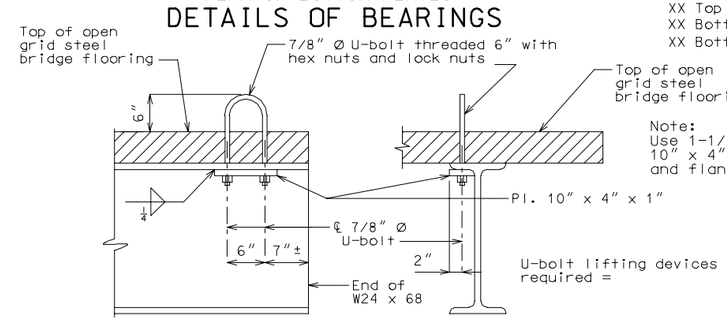

Note:
Use 1-1/16" Ø holes thru 10" x 4" x 1" plate and flange of W24 x 68.

SIDE VIEW

END VIEW

DETAILS OF U-BOLTS LIFTING DEVICE

U-bolt lifting device to be on the inside top flange at both ends of each exterior stringer of each unit. U-bolts to be removed during the time the bridge is open to traffic. Position of U-bolt may be shifted slightly to miss bars in flooring.

CREATED IN MICRO STATION

Detailed
Checked

Note: This drawing is not to scale. Follow dimensions.

Sheet No. of

COUNTY

TEM 3