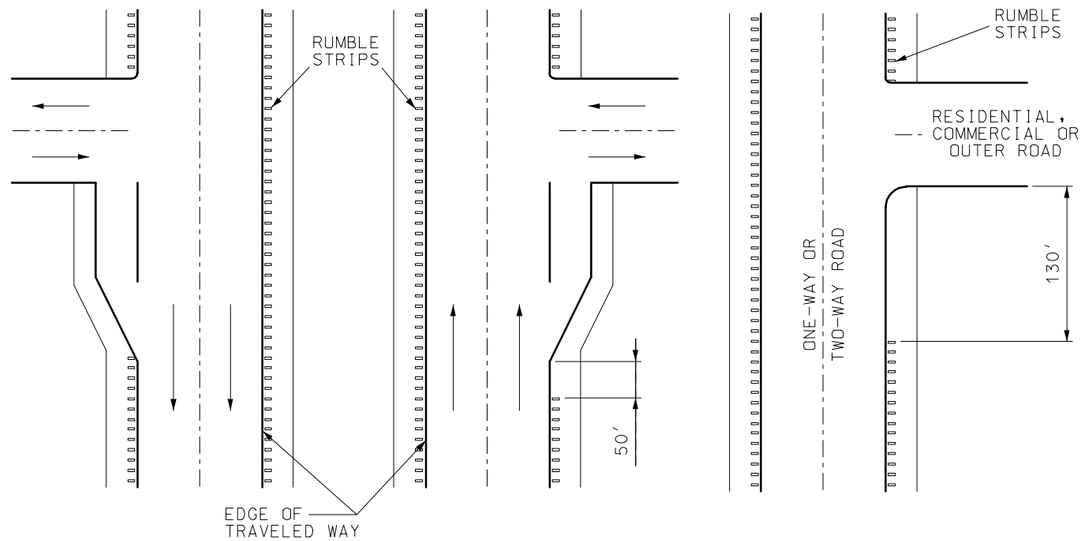

INTERSECTIONS

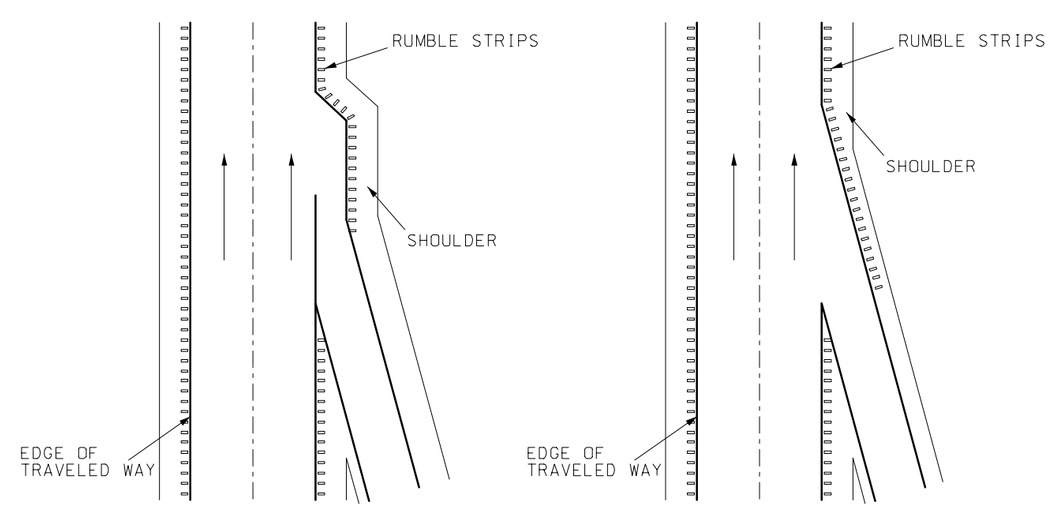

ACCELERATION OR DECELERATION LANE

ACCELERATION LANE SHOWN

RUMBLE STRIP LAYOUTS

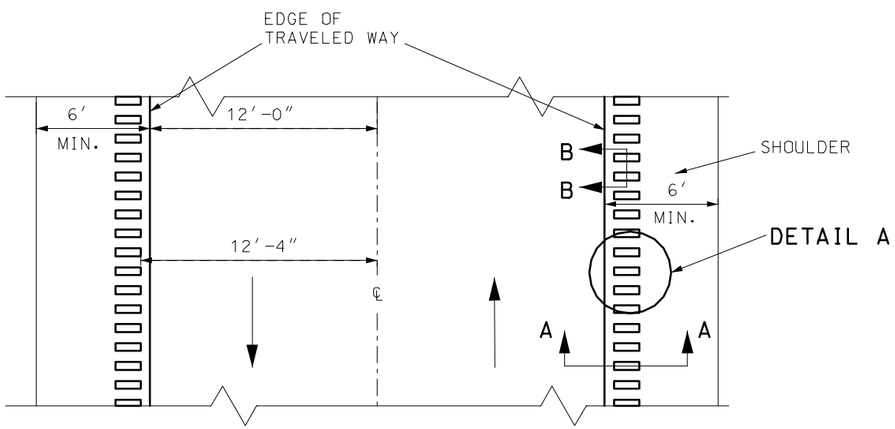

TWO-WAY ROAD

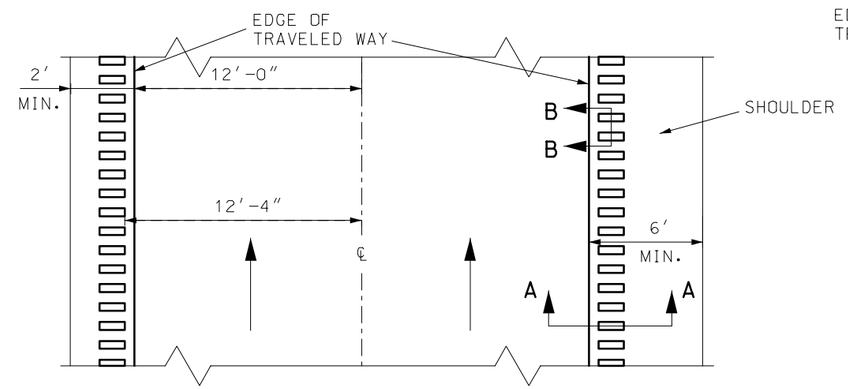

FREEWAY OR EXPRESSWAY

ROADWAY PLAN

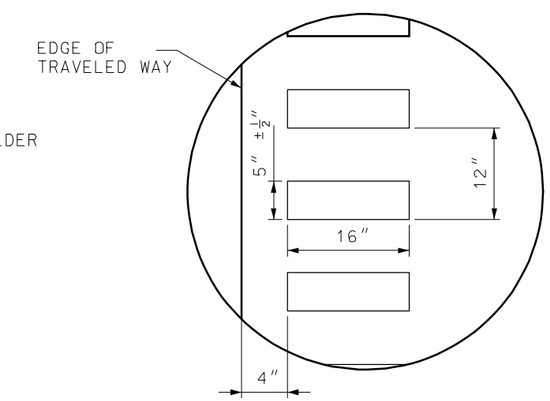

DETAIL A

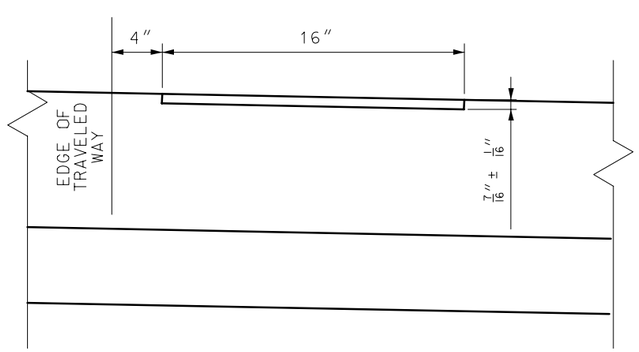

SECTION A-A

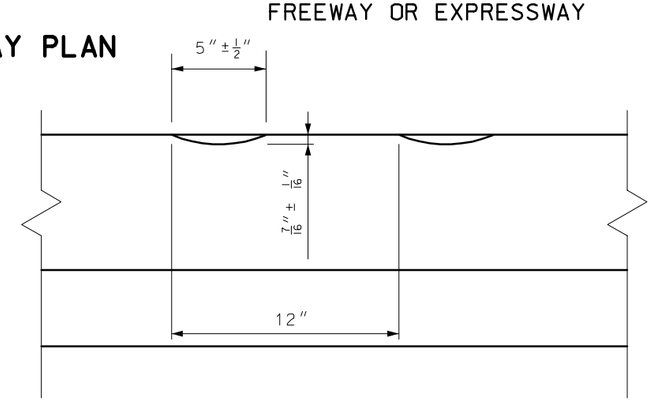

SECTION B-B

GENERAL NOTES:

RUMBLE STRIPS SHALL BE PLACED ON THE INSIDE SHOULDERS OF FREEWAYS OR EXPRESSWAYS IF THE SHOULDERS ARE 2' OR WIDER.

ALL RUMBLE STRIPS SHALL BE MILLED.

MISSOURI HIGHWAYS AND TRANSPORTATION COMMISSION			
	SHOULDER RUMBLE STRIPS		
DATE:_____	EFFECTIVE: 01-01-2004	626.00B	1/1