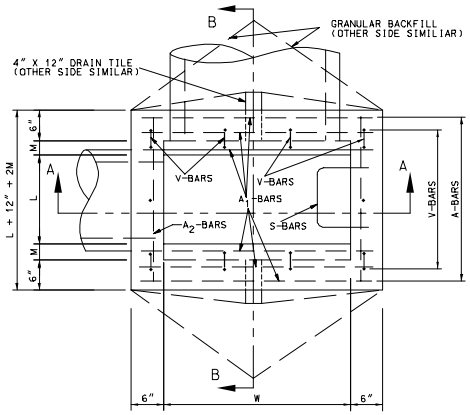

PLAN

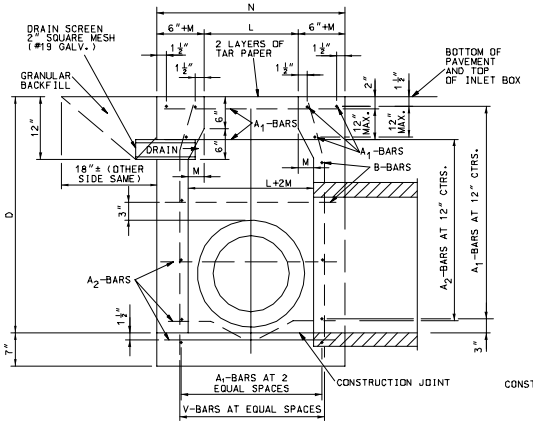

SECTION B-B

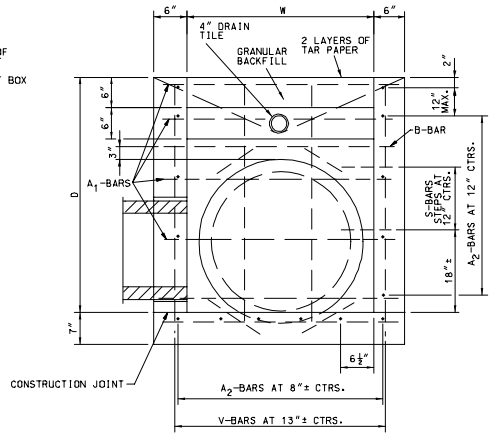

SECTION A-A

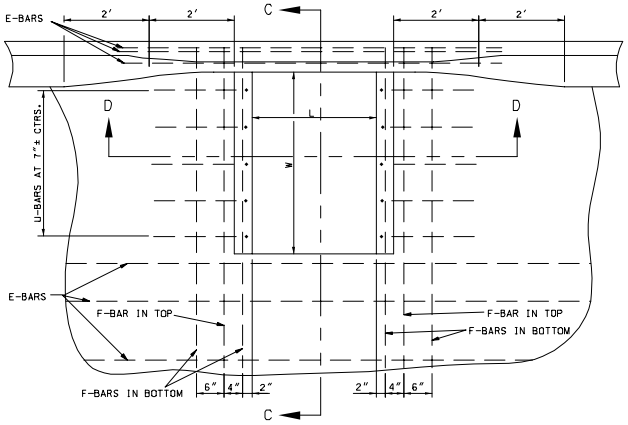

PLAN

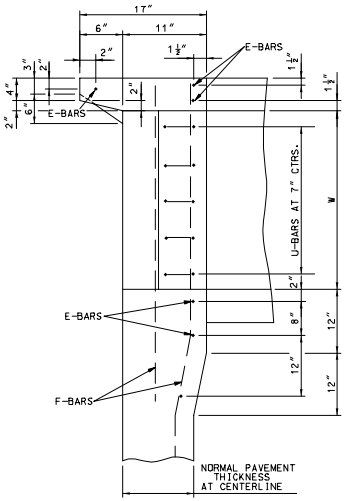

SECTION C-C

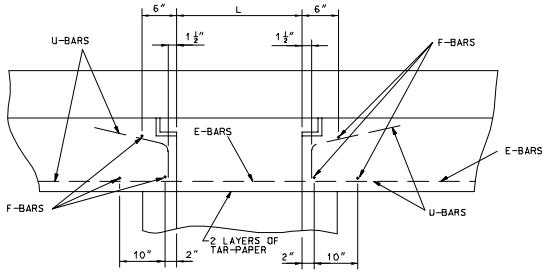

SECTION D-D

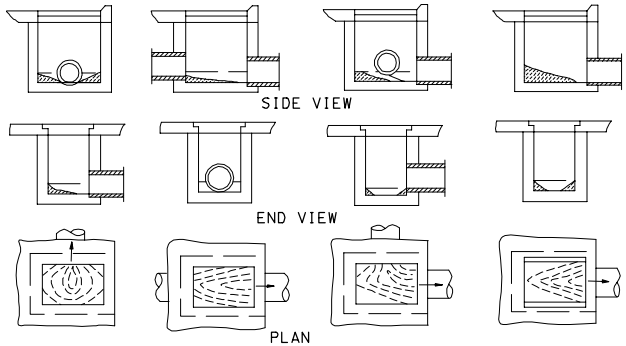

TYPICAL INVERTS

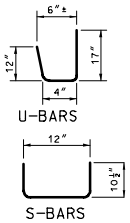

BENDING DIAGRAMS

BAR BILLS									
		2 X 3		2 X 4		3 X 3		3 X 4	
DEPTH "D"	MARK	NO.	LENGTH	NO.	LENGTH	NO.	LENGTH	NO.	LENGTH
ALL DEPTHS	E	6	6'-0"	6	6'-0"	6	6'-0"	6	6'-0"
	F	6	5'-6"	6	6'-6"	6	5'-6"	6	6'-6"
	U	10	2'-9"	14	2'-9"	10	2'-9"	14	2'-9"
2'-6"	A_1	11	3'-9"	11	4'-9"	11	3'-9"	11	4'-9"
	A_2	12	3'-3"	13	3'-3"	12	3'-9"	13	3'-9"
	V	12	2'-9"	14	2'-9"	12	2'-9"	14	2'-9"
3'-0"	A_1	13	3'-9"	13	4'-9"	13	3'-9"	13	4'-9"
	A_2	14	3'-3"	15	3'-3"	14	3'-9"	15	3'-9"
	V	12	3'-3"	14	3'-3"	12	3'-3"	14	3'-3"
3'-6"	A_1	13	3'-9"	13	4'-9"	13	3'-9"	13	4'-9"
	A_2	14	3'-3"	15	3'-3"	14	3'-9"	15	3'-9"
	V	12	3'-9"	14	3'-9"	12	3'-9"	14	3'-9"
4'-0"	A_1	15	3'-9"	15	4'-9"	15	3'-9"	15	4'-9"
	A_2	16	3'-3"	17	3'-3"	16	3'-9"	17	3'-9"
	V	12	4'-3"	14	4'-3"	12	4'-3"	14	4'-3"
4'-6"	A_1	15	3'-9"	15	4'-9"	15	3'-9"	15	4'-9"
	A_2	16	3'-3"	17	3'-3"	16	3'-9"	17	3'-9"
	V	12	4'-9"	14	4'-9"	12	4'-9"	14	4'-9"
	S	3	2'-9"	3	2'-9"	3	2'-9"	3	2'-9"
5'-0"	A_1	17	3'-9"	17	4'-9"	17	3'-9"	17	4'-9"
	A_2	18	3'-3"	19	3'-3"	18	3'-9"	19	3'-9"
	V	12	5'-3"	14	5'-3"	12	5'-3"	14	5'-3"
	S	4	2'-9"	4	2'-9"	4	2'-9"	4	2'-9"
5'-6"	A_1	17	3'-9"	17	4'-9"	17	3'-9"	17	4'-9"
	A_2	18	3'-3"	19	3'-3"	18	3'-9"	19	3'-9"
	V	12	5'-9"	14	5'-9"	12	5'-9"	14	5'-9"
	S	5	2'-9"	5	2'-9"	5	2'-9"	5	2'-9"
6'-0"	A_1	19	3'-9"	19	4'-9"	19	3'-9"	19	4'-9"
	A_2	20	3'-3"	21	3'-3"	20	3'-9"	21	3'-9"
	V	12	6'-3"	14	6'-3"	12	6'-3"	14	6'-3"
	S	5	2'-9"	5	2'-9"	5	2'-9"	5	2'-9"
6'-6"	A_1	19	3'-9"	19	4'-9"	19	3'-9"	19	4'-9"
	A_2	20	3'-3"	21	3'-3"	20	3'-9"	21	3'-9"
	V	12	6'-9"	14	6'-9"	12	6'-9"	14	6'-9"
	S	6	2'-9"	6	2'-9"	6	2'-9"	6	2'-9"
7'-0"	A_1	21	3'-9"	21	4'-9"	21	3'-9"	21	4'-9"
	A_2	22	3'-3"	23	3'-3"	22	3'-9"	23	3'-9"
	V	12	7'-3"	14	7'-3"	12	7'-3"	14	7'-3"
	S	6	2'-9"	6	2'-9"	6	2'-9"	6	2'-9"

A_1, A_2, F, AND V-BARS.....#4
E AND U-BAR.....#5
B AND S-BAR.....#6

FOR PIPE OPENING THROUGH WALLS					
WITH INSIDE LENGTH OF	2.0'	2.5'	3.0'	3.5'	4.0'
ADD (LBS. OF STEEL FOR B-BAR)	4	5	6	6	7

DIMENSIONS				
SIZE	2 X 3	2 X 4	3 X 3	3 X 4
GRATE OPENING	2' X 3'	2' X 4'	2' X 3'	2' X 4'
INSIDE BOX	30" X 36"	30" X 48"	36" X 36"	36" X 48"
L	24"	24"	24"	24"
W	36"	48"	36"	48"
M	3"	3"	6"	6"
N	42"	42"	48"	48"

QUANTITIES					
SIZE		2 X 3	2 X 4	3 X 3	3 X 4
D	C	1.08	1.31	1.35	1.65
2'-6"	S	163	193	168	197
3'-0"	C	1.23	1.49	1.54	1.88
	S	177	208	181	213
3'-6"	C	1.38	1.66	1.72	2.10
	S	181	213	186	218
4'-0"	C	1.53	1.84	1.91	2.32
	S	193	228	200	234
4'-6"	C	1.68	2.02	2.10	2.54
	S	211	245	216	251
5'-0"	C	1.82	2.19	2.28	2.76
	S	228	264	234	271
5'-6"	C	1.97	2.37	2.46	2.99
	S	236	273	242	280
6'-0"	C	2.12	2.54	2.65	3.21
	S	250	289	256	296
6'-6"	C	2.27	2.72	2.83	3.43
	S	258	297	264	304
7'-0"	C	2.42	2.90	3.02	3.65
	S	271	313	278	320

QUANTITIES INCLUDE 0.15 C.Y. CONCRETE FOR INVERT.

CONCRETE DEDUCTION FOR EACH PIPE OPENING C.Y.					
12"	15"	18"	24"	30"	36"
0.02	0.04	0.05	0.09	0.14	0.20

GENERAL NOTES:

TOP OF DROP INLET WALLS SHALL BE LEVEL AND TO THE ELEVATION OF BOTTOM OF SLAB AT EDGE OF PAVEMENT, AT DROP INLET.

ALL CONCRETE ABOVE THE TAR-PAPER SEPARATION JOINT IS TO BE CONSTRUCTED DURING PAVING OPERATIONS AND WILL BE PAID FOR AS SQUARE YARDS OF CONCRETE PAVEMENT.

ALL CONCRETE BELOW THE TAR-PAPER SEPARATION JOINT SHALL BE CLASS "B" CONCRETE. CONCRETE IN INVERTS SHALL BE PLACED AFTER DROP INLET HAS BEEN CONSTRUCTED.

REINFORCING BARS SHALL BE CUT AND/OR BENT AT PIPE OPENINGS. ALL U AND F-BARS SHALL BE SECURELY TIED TOGETHER AND FASTENED TO SECURE AGAINST ANY POSSIBLE DISPLACEMENT DURING THE PLACING OF CONCRETE. THE REINFORCING STEEL SHOWN ON THIS DRAWING IS IN ADDITION TO ANY REINFORCING SHOWN ON DRAWINGS FOR CONCRETE PAVEMENT.

NO DIRECT PAYMENT WILL BE MADE FOR CUTTING PIPE.

MISSOURI HIGHWAY AND TRANSPORTATION COMMISSION

DROP INLET

TYPE C

DATE:_____ EFFECTIVE: 604.21B 1/1