BAR BILLS

DEPTH "D" (3 X 2 DROP INLET)	#4 A-BARS VERTICAL WALLS NO.	#4 A-BARS VERTICAL WALLS LENGTH	#4 B-BARS LG.- FLOOR & SIDEWALLS NO.	#4 B-BARS LG.- FLOOR & SIDEWALLS LENGTH	#4 C-BARS LATERAL FLOOR & ENDWALLS NO.	#4 C-BARS LATERAL FLOOR & ENDWALLS LENGTH	#6 S-BARS STEPS NO.	#6 S-BARS STEPS LENGTH
2'-0"	10	2'-3"	7	3'-9"	8	2'-9"		
2'-3"	10	2'-6"	7	3'-9"	8	2'-9"		
2'-6"	10	2'-9"	9	3'-9"	10	2'-9"		
3'-0"	10	3'-3"	9	3'-9"	10	2'-9"		
3'-6"	10	3'-9"	11	3'-9"	12	2'-9"		
4'-0"	10	4'-3"	11	3'-9"	12	2'-9"	2	2'-9"
4'-6"	10	4'-9"	13	3'-9"	14	2'-9"	2	2'-9"
5'-0"	10	5'-3"	13	3'-9"	14	2'-9"	3	2'-9"
5'-6"	10	5'-9"	15	3'-9"	16	2'-9"	3	2'-9"
6'-0"	10	6'-3"	15	3'-9"	16	2'-9"	4	2'-9"
6'-6"	10	6'-9"	17	3'-9"	18	2'-9"	4	2'-9"
7'-0"	10	7'-3"	17	3'-9"	18	2'-9"	5	2'-9"
7'-6"	10	7'-9"	19	3'-9"	20	2'-9"	5	2'-9"
8'-0"	10	8'-3"	19	3'-9"	20	2'-9"	6	2'-9"
8'-6"	10	8'-9"	21	3'-9"	22	2'-9"	6	2'-9"
9'-0"	10	9'-3"	21	3'-9"	22	2'-9"	7	2'-9"
9'-6"	10	9'-9"	23	3'-9"	24	2'-9"	7	2'-9"
10'-0"	10	10'-3"	23	3'-9"	24	2'-9"	8	2'-9"

DEPTH "D" (3 X 3 DROP INLET)	#4 A-BARS VERTICAL WALLS NO.	#4 A-BARS VERTICAL WALLS LENGTH	#4 B-BARS LG.- FLOOR & SIDEWALLS NO.	#4 B-BARS LG.- FLOOR & SIDEWALLS LENGTH	#4 C-BARS LATERAL FLOOR & ENDWALLS NO.	#4 C-BARS LATERAL FLOOR & ENDWALLS LENGTH	#6 S-BARS STEPS NO.	#6 S-BARS STEPS LENGTH
2'-0"	12	2'-3"	8	3'-9"	8	3'-9"		
2'-3"	12	2'-6"	8	3'-9"	8	3'-9"		
2'-6"	12	2'-9"	10	3'-9"	10	3'-9"		
3'-0"	12	3'-3"	10	3'-9"	10	3'-9"		
3'-6"	12	3'-9"	12	3'-9"	12	3'-9"		
4'-0"	12	4'-3"	12	3'-9"	12	3'-9"	2	2'-9"
4'-6"	12	4'-9"	14	3'-9"	14	3'-9"	2	2'-9"
5'-0"	12	5'-3"	14	3'-9"	14	3'-9"	3	2'-9"
5'-6"	12	5'-9"	16	3'-9"	16	3'-9"	3	2'-9"
6'-0"	12	6'-3"	16	3'-9"	16	3'-9"	4	2'-9"
6'-6"	12	6'-9"	18	3'-9"	18	3'-9"	4	2'-9"
7'-0"	12	7'-3"	18	3'-9"	18	3'-9"	5	2'-9"
7'-6"	12	7'-9"	20	3'-9"	20	3'-9"	5	2'-9"
8'-0"	12	8'-3"	20	3'-9"	20	3'-9"	6	2'-9"
8'-6"	12	8'-9"	22	3'-9"	22	3'-9"	6	2'-9"
9'-0"	12	9'-3"	22	3'-9"	22	3'-9"	7	2'-9"
9'-6"	12	9'-9"	24	3'-9"	24	3'-9"	7	2'-9"
10'-0"	12	10'-3"	24	3'-9"	24	3'-9"	8	2'-9"

NOTE:

FOR EACH SPILLWAY REDUCE LENGTH OF 2 A-BARS 1'-0" EACH AND ELIMINATE ONE B-BAR

BAR BILL FOR TYPE A COVER

3' X 2' D.I.

5 - #4 BARS 3'-9" LONG
5 - #4 BARS 2'-9" LONG

3' X 3' D.I.

5 - #4 BARS 3'-9" LONG
5 - #3 BARS 3'-9" LONG

(1) 3-#4 BARS 3'-9" LONG EQUALLY SPACED.

QUANTITIES

DEPTH "D"	TYPE A COVER 1 SPILLWAY CONC. CU. YD.	TYPE A COVER 1 SPILLWAY STEEL LBS.	TYPE A COVER 2 SPILLWAY CONC. CU. YD.	TYPE A COVER 2 SPILLWAY STEEL LBS.	TYPE C ONLY NO SPILLWAY CONC. CU. YD.	TYPE C ONLY NO SPILLWAY STEEL LBS.	TYPE B OR C COVER 1 SPILLWAY CONC. CU. YD.	TYPE B OR C COVER 1 SPILLWAY STEEL LBS.	TYPE B OR C COVER 2 SPILLWAY CONC. CU. YD.	TYPE B OR C COVER 2 SPILLWAY STEEL LBS.
3' X 2' DROP INLET										
2'-0"	0.86	67	0.81	63	0.76	47	0.71	43	0.66	39
2'-3"	0.92	69	0.87	65	0.82	49	0.77	45	0.72	41
2'-6"	0.98	79	0.93	75	0.88	59	0.83	55	0.78	51
3'-0"	1.09	83	1.04	79	0.99	63	0.94	59	0.89	55
3'-6"	1.20	95	1.15	91	1.10	75	1.05	71	1.00	67
4'-0"	1.31	106	1.26	102	1.21	86	1.16	82	1.11	78
4'-6"	1.42	118	1.37	114	1.32	98	1.27	94	1.22	90
5'-0"	1.53	125	1.48	121	1.43	105	1.38	101	1.33	97
5'-6"	1.64	139	1.59	133	1.54	117	1.49	113	1.44	109
6'-0"	1.75	146	1.70	142	1.65	126	1.60	122	1.55	118
6'-6"	1.86	158	1.81	154	1.76	138	1.71	134	1.66	130
7'-0"	1.97	165	1.92	161	1.87	145	1.82	141	1.77	137
7'-6"	2.08	177	2.03	173	1.98	157	1.93	153	1.88	149
8'-0"	2.20	184	2.15	180	2.10	164	2.05	160	2.00	156
8'-6"	2.31	196	2.26	192	2.21	176	2.16	172	2.11	168
9'-0"	2.42	204	2.37	200	2.32	184	2.27	180	2.22	176
9'-6"	2.53	216	2.48	212	2.43	196	2.38	192	2.33	188
10'-0"	2.64	223	2.59	219	2.54	203	2.49	199	2.44	195
3' X 3' DROP INLET										
2'-0"	1.06	84	1.01	80	0.91	58	0.86	54	0.81	50
2'-3"	1.13	86	1.08	82	0.98	60	0.93	56	0.88	52
2'-6"	1.19	98	1.15	94	1.04	72	0.99	68	0.94	64
3'-0"	1.32	102	1.27	98	1.17	76	1.12	72	1.07	68
3'-6"	1.45	116	1.40	112	1.30	90	1.25	86	1.20	82
4'-0"	1.58	128	1.53	124	1.43	102	1.38	98	1.33	94
4'-6"	1.71	142	1.66	138	1.56	116	1.51	112	1.46	108
5'-0"	1.84	150	1.79	146	1.69	124	1.64	120	1.59	116
5'-6"	1.97	164	1.92	160	1.82	138	1.77	134	1.72	130
6'-0"	2.10	173	2.05	169	1.95	147	1.90	143	1.85	139
6'-6"	2.23	187	2.18	183	2.08	161	2.03	157	1.98	153
7'-0"	2.36	195	2.31	191	2.21	169	2.16	165	2.11	161
7'-6"	2.49	209	2.44	205	2.34	183	2.29	179	2.24	175
8'-0"	2.62	217	2.57	213	2.47	191	2.42	187	2.37	183
8'-6"	2.75	231	2.70	227	2.60	205	2.55	201	2.50	197
9'-0"	2.88	239	2.83	235	2.73	213	2.68	209	2.63	205
9'-6"	3.01	253	2.96	249	2.86	227	2.81	223	2.76	219
10'-0"	3.14	261	3.09	257	2.99	235	2.94	231	2.89	227

QUANTITIES INCLUDE 0.15 C.Y. CONCRETE FOR INVERT

DEDUCTIONS FROM CONCRETE QUANTITIES FOR PIPE OPENINGS

SIZE	CU. YD.
12"	0.03
15"	0.04
18"	0.05
21"	0.07
24"	0.09

TYPE "A" COVER CONCRETE & STEEL QUANTITIES INCLUDED IN TABLE

TYPE "B" COVER FABRICATED STRUCTURAL STEEL

4' X 3' COVER = 130 LBS
4' X 4' COVER = 170 LBS

TYPE "C" COVER GRATES & BEARING PLATES

3' X 2' D.I. = 50 LBS
3' X 3' D.I. = 70 LBS

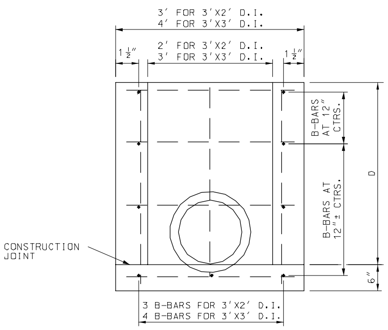

SECTION B-B

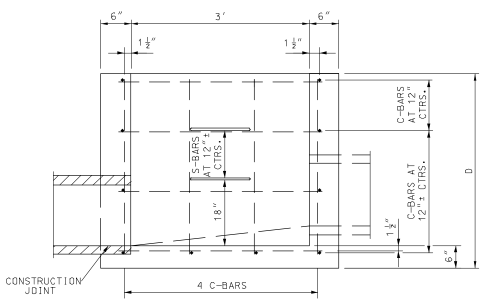

SECTION A-A

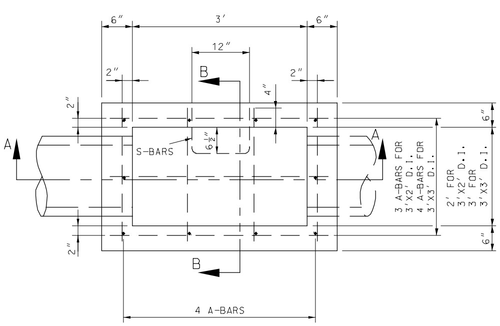

PLAN
(WITHOUT COVER OR SPILLWAY)

BASIC DROP INLET

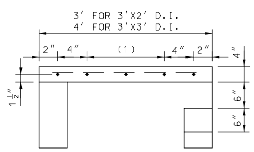

SECTION B-B

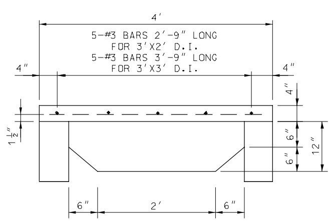

SECTION A-A

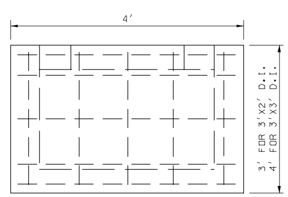

PLAN
(PRECAST CONCRETE SLAB COVER)

TYPE A COVER
AND SPILLWAY DETAILS

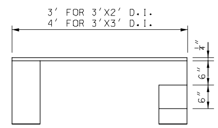

SECTION B-B

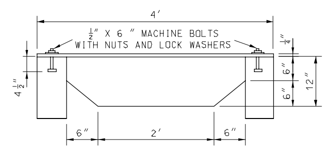

SECTION A-A

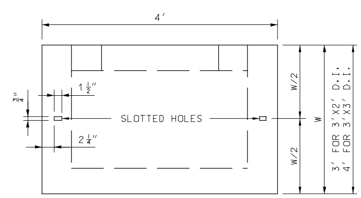

PLAN
(1/4" STEEL PLATE COVER)

TYPE B COVER
AND SPILLWAY DETAILS

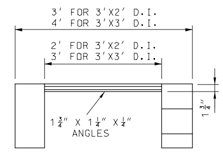

SECTION B-B

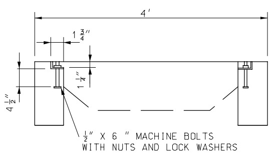

SECTION A-A

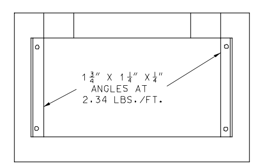

GRATE NOT SHOWN

ANY GRATE CAPABLE OF SUPPORTING A UNIFORMLY DISTRUBUTED LOAD OF 300# PER SQ. FOOT CONFORMING TO STD. SPECIFICATIONS CAN BE USED.

PLAN
(GRATE AND BEARING PLATE)

TYPE C COVER

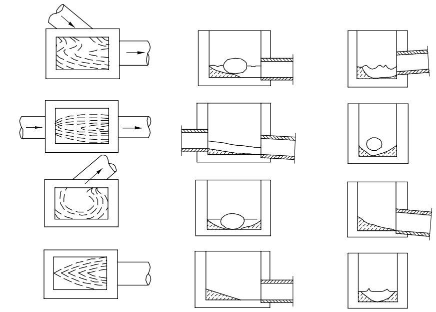

PLAN SIDE VIEW END VIEW

TYPICAL INVERTS

GENERAL NOTES:

THE TYPE OF COVER, "A", "B" OR "C", WILL BE DESIGNATED ON THE DETAIL PLANS. DROP INLET MAY BE BUILT WITH OR WITHOUT SPILLWAYS WITH TYPE "C" COVER.

NO DIRECT PAYMENT WILL BE MADE FOR CUTTING PIPE.

ALL SHOP RIVETED CONTACT SURFACES OF GRATES SHALL BE GIVEN TWO COATS OF SINGLE COMPONENT INORGANIC ZINC OR ORGANIC, ZINC-RICH PAINT, MEETING THE APPROVAL OF THE ENGINEER.

TYPE "B" COVERS SHALL BE PAINTED TWO COATS OF PAINT APPLIED IN THE SHOP OR FIELD, BY ANY METHOD THAT WILL INSURE A COMPLETE COVERAGE FOR EACH COAT.

THE CONCRETE FOR INVERTS SHALL BE PLACED AFTER COMPLETION OF THE DROP INLET BOX.

NO DIRECT PAYMENT WILL BE MADE FOR CUTTING OR BENDING REINFORCING BARS AT PIPE OPENINGS.

MISSOURI HIGHWAY AND TRANSPORTATION COMMISSION

DROP INLET

TYPE E

DATE: ______ EFFECTIVE: 04-01-1983

604.23B