TABLE OF DIMENSIONS								
SIZE OF PIPE		DIMENSIONS		LENGTH OF BARS			QUANTITIES	
LARGE IN.	SMALL IN.	A & B FT-IN	C FT-IN	A(#5) 12 REQ'D FT-IN.	B(#6) 4 REQ'D FT-IN.	C(#4) 8 REQ'D FT-IN.	CONC. CU.YD.	STEEL LBS.
12	12	2-8	1-0	2-5	5-10	0-9	0.21	70
15	12 15	3-0	1-0	2-9	6-6	0-9	0.27 0.25	77
18	12 15 18	3-3	1-0	3-0	7-0	0-9	0.33 0.32 0.30	84
21	12 15 18	3-6	1-0	3-3	7-6	0-9	0.36 0.34 0.33	90
24	15 18 24	3-10	1-0	3-6	8-2	0-9	0.44 0.40 0.36	97
30	18 24 30	4-5	1-4	4-2	9-4	1-0	0.71 0.66 0.60	114
36	24 30 36	5-0	1-4	4-9	10-6	1-0	0.88 0.79 0.76	128
42	30 36 42	5-7	1-4	5-4	11-8	1-0	1.05 0.98 0.89	142
48	36 42 48	6-2	1-4	6-0	12-10	1-0	1.22 1.13 1.03	158
54	42 48 54	7-1	1-8	6-9	14-8	1-6	2.02 1.90 1.76	181
60	48 54 60	7-8	1-8	7-5	15-10	1-6	2.27 2.13 1.97	196
66	54 60 66	8-3	2-0	8-0	17-0	1-9	3.04 2.85 2.65	210
72	60 66 72	8-10	2-0	7-7	18-2	1-9	3.36 3.16 2.93	225

TABLE OF DIMENSIONS									
BOX SIZE FT.	PIPE SIZE IN.	DIMENSIONS			LENGTH OF BARS			QUANTITIES	
		A FT-IN	B FT-IN	C FT-IN	A(#5) 6 REQ'D FT-IN.	B(#6) 4 REQ'D FT-IN.	C(#4) 8 REQ'D FT-IN.	D(#5) 6 REQ'D FT-IN.	CONC. CU.YD.	STEEL LBS.
2 x 1-1/2	24	5-1	4-9	1-0	4-10	10-4	0-9	4-6	0.65	124
2 x 2	30	5-3	5-3	1-4	5-0	11-0	1-0	5-0	0.93	134
3 x 2	36	6-1	5-10	1-4	5-10	12-5	1-0	5-7	1.16	151
3 x 3	42	6-5	6-5	1-4	6-0	13-4	1-0	6-0	1.29	162

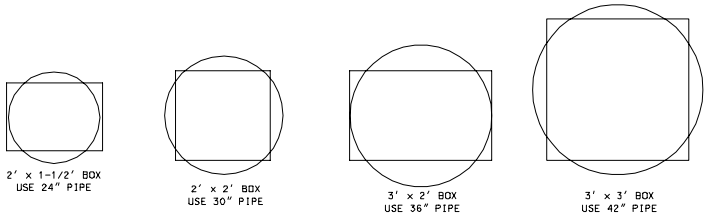

PIPE PLACEMENT

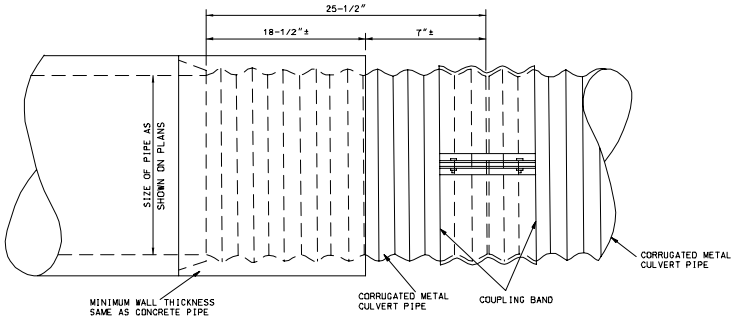

(FOR CONCRETE PIPE TO CORRUGATED METAL PIPE)
TYPE B COLLAR

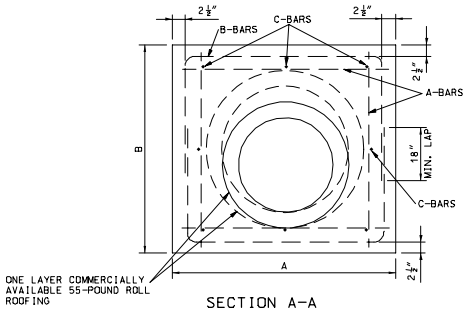

SECTION A-A

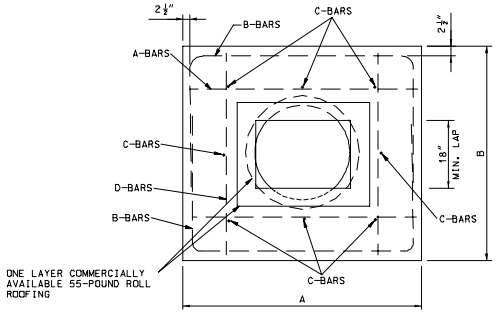

SECTION A-A

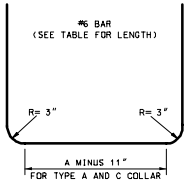

BENDING DIAGRAM FOR B-BARS

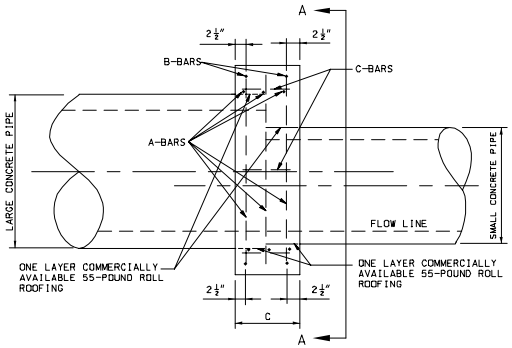

ELEVATION
(FOR CONCRETE PIPE TO CONCRETE PIPE)
TYPE A COLLAR

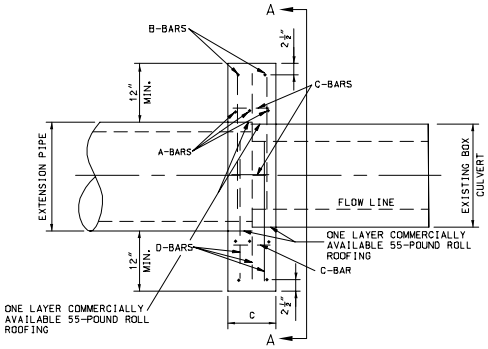

ELEVATION
(FOR BOX CULVERT TO PIPE)
TYPE C COLLAR

MISSOURI HIGHWAY AND TRANSPORTATION COMMISSION

PIPE COLLARS

DATE:_____ EFFECTIVE: 10-01-2000 604.40F 1/1