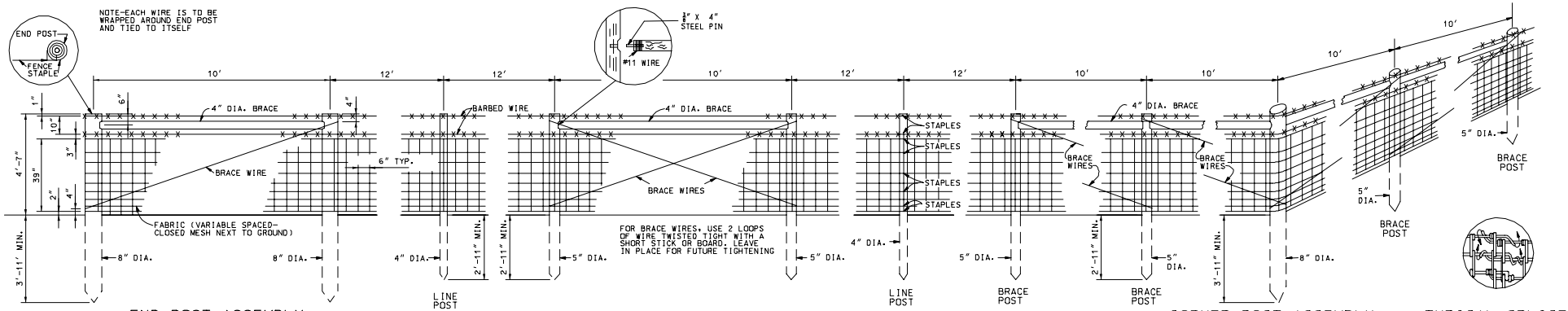

END POST ASSEMBLY

PULL POST ASSEMBLY

WOOD POST

CORNER POST ASSEMBLY

TYPICAL SPLICE

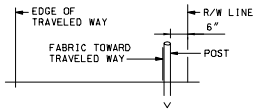

TYPICAL FENCE LOCATION

GATE OPENING	GATE POST SIZE	#/FT.
≤ 6'	2" DIA.	3.65
≤13'	2½" DIA.	5.79
≤18'	3½" DIA.	9.10
>18'	6" DIA.	18.97
GATE FRAME	1½" DIA.	2.72

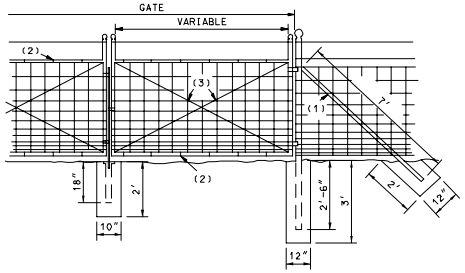

1. BRACES
2. WIRE TIES
3. 3.8" ADJUSTABLE TRUSS RODS.

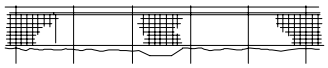

ROADWAY DITCHES OR SMALL SHALLOW CHANNELS (SPAN WITH NORMAL LINE POST SPACING)

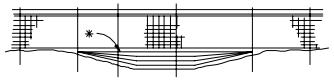

POORLY DEFINED CHANNELS (SMALL DRAINAGE AREAS)

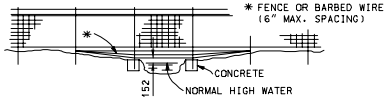

WELL DEFINED CHANNELS (LARGE DRAINAGE AREAS)

TYPICAL FENCING AT CHANNEL CROSSING

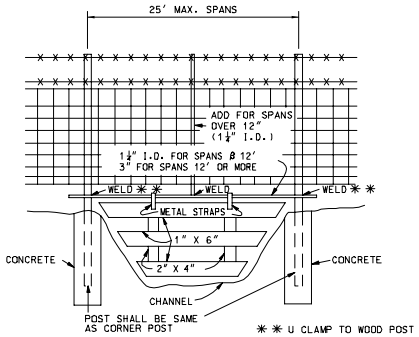

TYPICAL WATER CROSSING GATE

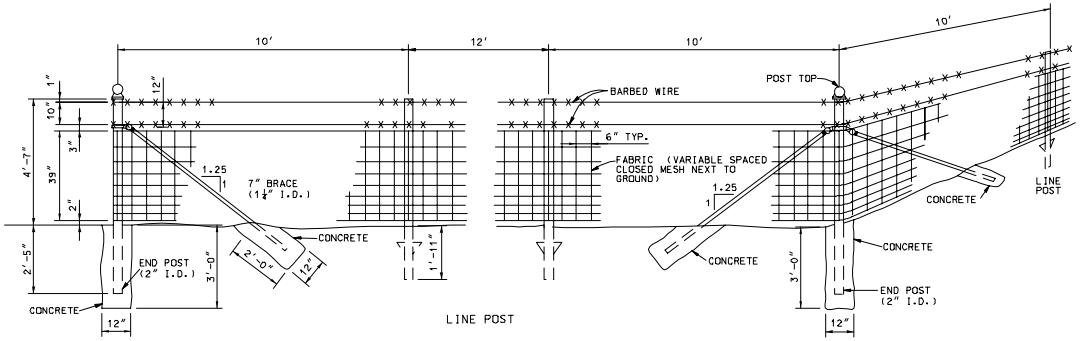

END POST ASSEMBLY

LINE POST

CORNER OR PULL POST ASSEMBLY

STEEL POST

GENERAL NOTES:

STEEL LINE POSTS SHALL BE OF AN APPROVED "U", "Y", "T" OR CHANNEL SECTION, NOTCHED OR STUDDED WITH AN ANCHOR PLATE. POST PUNCHED WITH HOLES OR SELF FASTENING LUGS WILL NOT BE PERMITTED.

STAPLES SHALL BE SCREW SHANK TYPE OR EQUIVALENT (1¼" MINIMUM LENGTH).

STRETCHED FABRIC AND BARBED WIRE ON OUTSIDE OF POST ON CORNERS AND CURVES.

ATTACHMENT OF FABRIC TO STEEL LINE POSTS IN ACCORDANCE WITH MANUFACTURE'S RECOMMENDATION.

GATES FOR WOVEN WIRE FENCE SHALL BE IN ACCORDANCE WITH SECTION 607.20 AND 1043.2.6 OF THE STANDARD SPECIFICATIONS. EXCEPT THE FILLER SHALL BE WOVEN WIRE FABRIC OF THE SAME KIND AS USED FOR THE FENCE.

SINGLE LEAF GATES REQUIRE UP TO 12" OPENING. DOUBLE LEAF GATES REQUIRE OVER 12" OPENING. DIRECTION OF SWING OF GATES SHALL BE AS INDICATED ON THE PLANS OR AS DIRECTED BY THE ENGINEER.

MISSOURI HIGHWAY AND TRANSPORTATION COMMISSION			
	WOVEN WIRE FENCE		
DATE:_____	EFFECTIVE:10-01-1998	607.20F	1/1