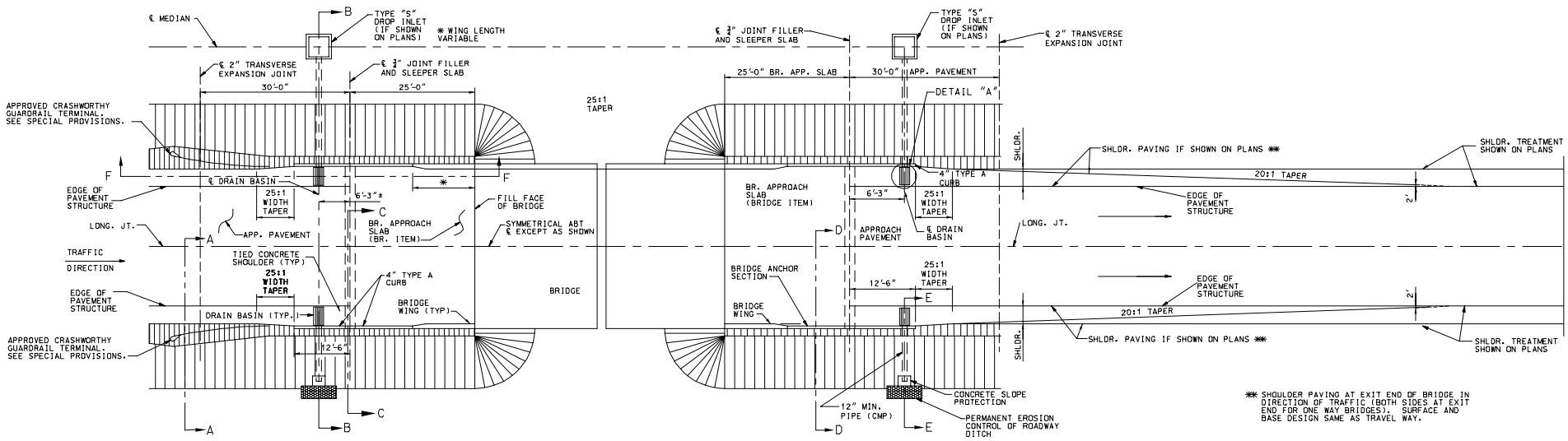

PLAN

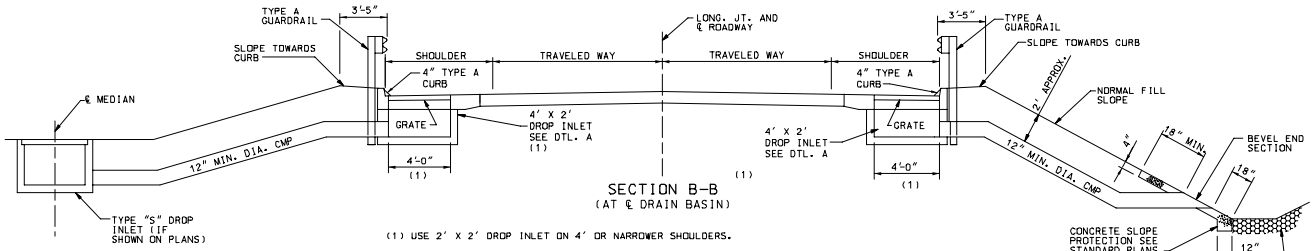

SECTION B-B
(AT ℄ DRAIN BASIN)

(1) USE 2' X 2' DROP INLET ON 4' OR NARROWER SHOULDERS.

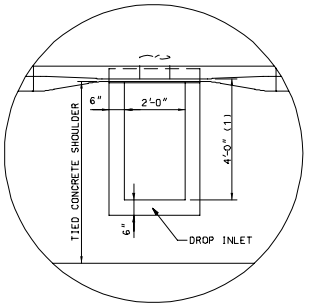

DETAIL "A"

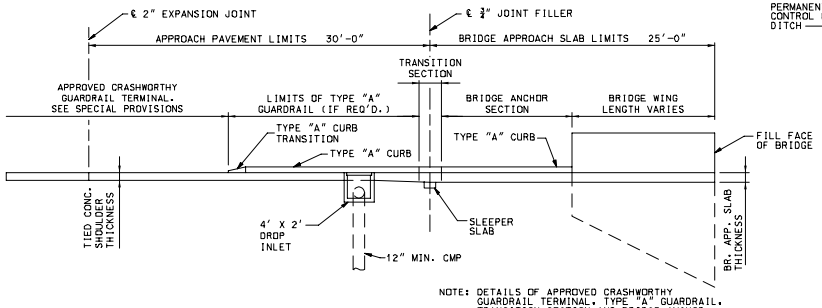

NOTE: DETAILS OF APPROVED CRASHWORTHY GUARDRAIL TERMINAL, TYPE "A" GUARDRAIL, TRANSITION SECTION AND BRIDGE ANCHOR SECTION ARE NOT SHOWN FOR CLARITY.

SECTION F-F

GENERAL NOTES:

A 25:1 WIDTH TAPER MUST BE PROVIDED IMMEDIATELY UPSTREAM OR DOWNSTREAM OF THE LIMITS OF TYPE A CURB IN ORDER TO TRANSITION ROADWAY WIDTH TO WIDTH BETWEEN GUARDRAIL FACES ON BRIDGE APPROACH PAVEMENT.

FOR DETAILS OF BRIDGE APPROACH SLAB, SEE BRIDGE PLANS.

TYPE A CURB IS TO BE CONSTRUCTED ON CONCRETE APPROACH PAVEMENT ONLY WHEN DRAIN BASINS ARE REQUIRED.

CONSTRUCT DRAIN BASINS WHEN SHOWN ON PLANS.

SEE STANDARD PLANS 504.00 FOR DETAILS OF CONCRETE APPROACH PAVEMENT.

FOR DETAILS OF GRATES, BEARING PLATES FOR DROP INLET SEE STANDARD PLANS 614.10 AND 614.11.

IF REQUIRED, TYPE A GUARDRAIL SHALL BE USED FROM THE END OF THE TRANSITION SECTION FOR THE BRIDGE ANCHOR SECTION TO THE TERMINATION OF THE TYPE A CURB.

SEE STANDARD PLANS 731.10 FOR DETAILS OF DROP INLET. USE TYPE A FOR LOCATION OF DROP INLET.

SEE STANDARD PLANS 609.00 FOR TYPE A CURB. HEIGHT OF TYPE A CURB WILL BE 4 INCHES.

DEPTH OF DROP INLET AS SHOWN ON ROADWAY PLANS.

PAYMENT FOR MATERIALS, EXCAVATION, AND PLACING OF CONCRETE SLOPE PROTECTION WILL BE PAID FOR AT THE CONTRACT UNIT BID PRICE PER SQUARE YARD.

PAYMENT FOR DROP INLET, GRATE, CMP, PERMANENT EROSION CONTROL MATERIAL AND INSTALLATION WILL BE PAID FOR AT THE CONTRACT UNIT PRICE FOR DRAIN BASIN PER EACH.

FOR DETAILS OF SEC. A-A, C-C, D-D, AND E-E SEE SHEET 2 OF 2.

ON THE APPROACH PAVEMENT, TYPE A CURB WILL BE INCLUDED WITH THE TYPE A CURB BID ITEM.

MISSOURI HIGHWAYS AND TRANSPORTATION COMMISSION

DRAIN BASIN, SHOULDER PAVING AND FILL SLOPES AT BRIDGE ENDS

DATE:	EFFECTIVE: 04-01-2002	609.40L	1/2

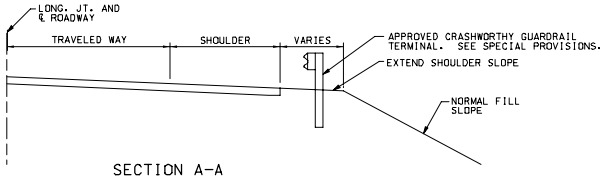

SECTION A-A

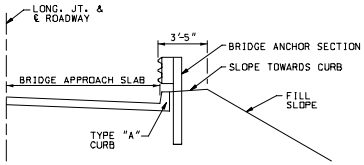

SECTION D-D
THRU BRIDGE ANCHOR SECTION

NOTE: FOR DETAILS NOT SHOWN,
SEE OTHER SECTIONS.

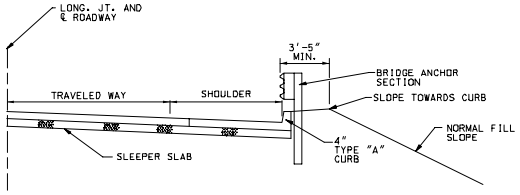

SECTION C-C

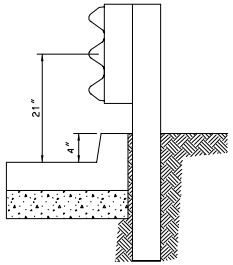

GUARD RAIL AT BARRIER CURB

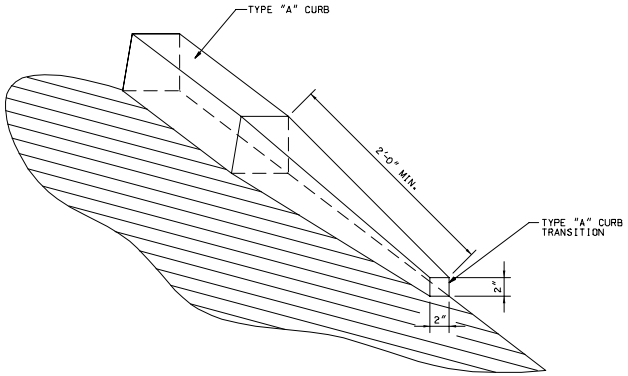

TYPE "A" CURB
TRANSITION DETAIL

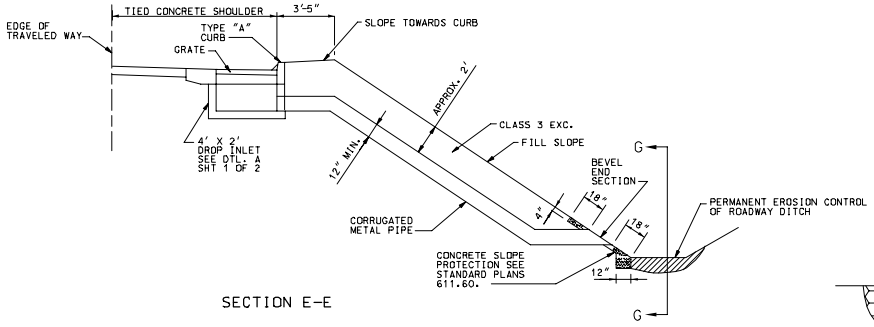

SECTION E-E

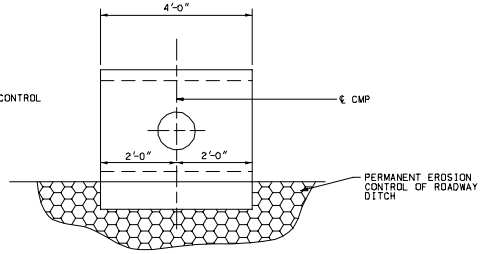

SECTION G-G

GENERAL NOTE:

FOR LOCATION OF SEC. A-A, C-C, D-D, AND E-E, SEE SHEET 1 OF 1.

MISSOURI HIGHWAYS AND TRANSPORTATION COMMISSION			
	DRAIN BASIN, SHOULDER PAVING AND FILL SLOPES AT BRIDGE ENDS		
DATE:_____	EFFECTIVE:04-01-2002	609.40L	2/2