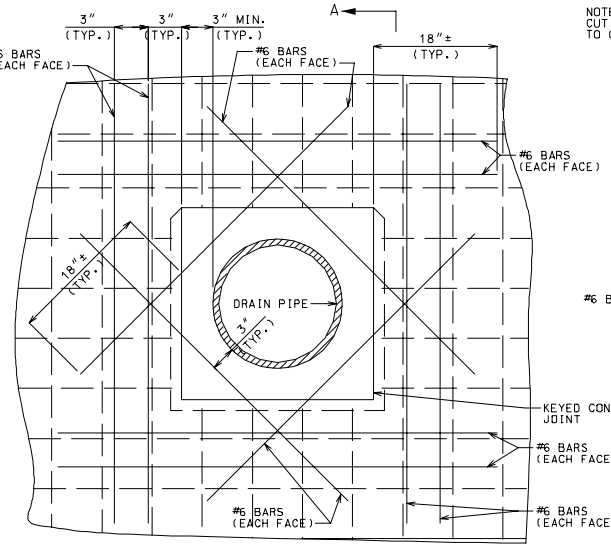

PART ELEVATION OF EXTERIOR WALL
(PIPE DIAMETER = 24" OR MORE)
(WALL THICKNESS = 12" OR MORE)

NOTE:
CUT PLAN REINFORCING BARS TO CLEAR PIPE BLOCK-OUT.

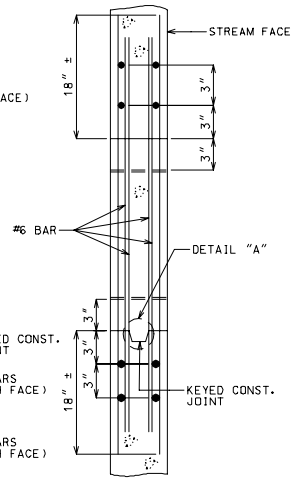

SECTION A-A

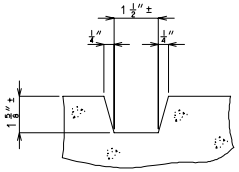

DETAIL "A"
(KEYED JOINT)

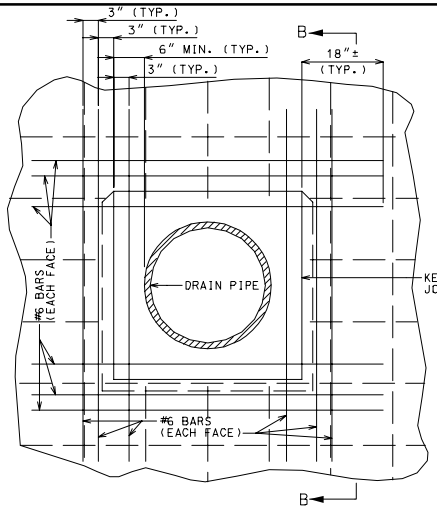

PART ELEVATION OF EXTERIOR WALL
(PIPE DIAMETER = 24" OR MORE)
(WALL THICKNESS = 8" TO 12")

NOTE:
CUT PLAN REINFORCING BARS TO CLEAR PIPE BLOCK-OUT.

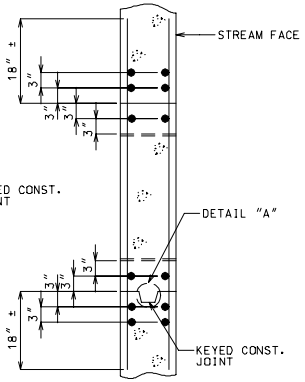

SECTION B-B

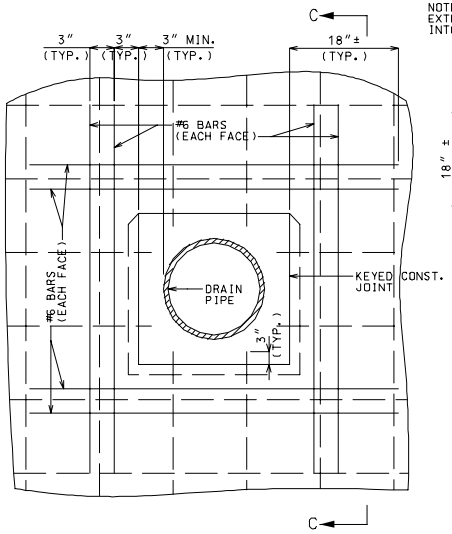

PART ELEVATION OF EXTERIOR WALL
(PIPE DIAMETER = LESS THAN 24")
(WALL THICKNESS = 8" OR MORE)

NOTE:
EXTEND PLAN REINFORCING BARS INTO PIPE BLOCK-OUT AS SHOWN.

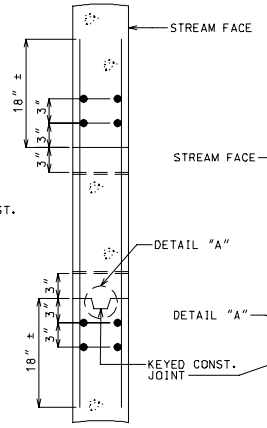

SECTION C-C

NOTE:
CUT PLAN REINFORCING BARS TO CLEAR PIPE BLOCK-OUT. ADDITIONAL VERTICAL #6 BARS TO BE IN SAME PLANE AS VERTICAL PLAN REINFORCEMENT IN STREAM FACE.

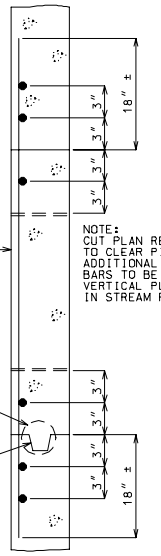

SECTION D-D

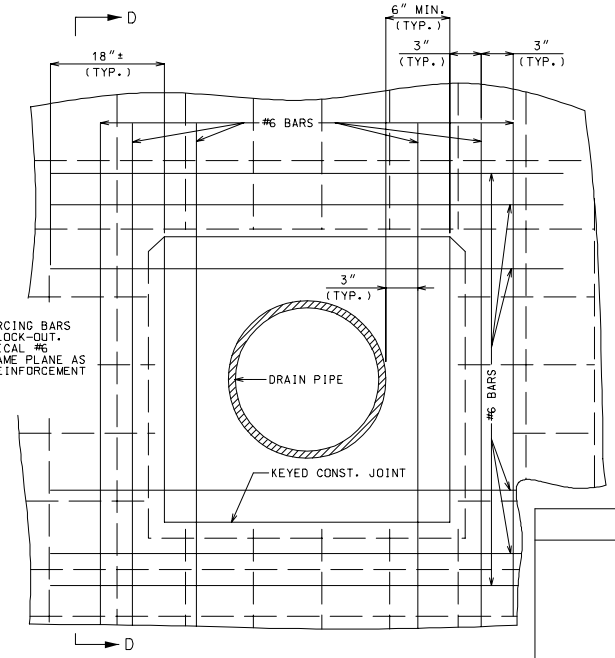

PART ELEVATION OF EXTERIOR WALL
(PIPE DIAMETER = 36" OR LESS)
(WALL THICKNESS = LESS THAN 8")

NOTE:
DASHED BARS REPRESENT PLAN REINFORCEMENT.

SOLID BARS INDICATE ADDITIONAL #6 BARS.

BAR COVER FROM FACE OF CONCRETE = 1-1/2" CLEAR.

SEE ROAD PLANS FOR LOCATION, SIZE AND TYPE OF PIPE.

PLACE 5/16" JOINT FILLER AROUND REINFORCED CONCRETE PIPE AND EMULSIFIED ASPHALT AROUND CORRUGATED METAL PIPE AT PIPE INLET.

THE BLOCK-OUT MAY BE ELIMINATED AT CONTRACTORS ELECTION. IF BLOCK-OUT IS ELIMINATED, REINFORCEMENT SHALL BE AS SHOWN EXCEPT PLAN REINFORCEMENT MAY BE BENT TO CLEAR PIPE.

ADDITIONAL REINFORCEMENT REQUIRED FOR BLOCK-OUT IS NOT INCLUDED IN ESTIMATED QUANTITIES. NO SEPARATE PAYMENT WILL BE MADE FOR ADDITIONAL REINFORCING REQUIRED.

MISSOURI HIGHWAY AND TRANSPORTATION COMMISSION

CONCRETE BOX STRUCTURE PIPE INLET

DATE _____	EFFECTIVE: 07-01-2001	703.60E	1/1