Span (S) = 4 ft
HT (ft) = 4 or 5

	DESIGN FILL	MEMBER THICKNESSES				TOP SLAB BARS								BOTTOM SLAB BARS						WALL BARS						COEFFICIENTS (see note)										"C" Multiplier	"Q" Multiplier	"K" Multiplier	
		TS	BS	TX	TI	A1	Bars	J3	Bars	H1	Bars	H2	Bars	A2	Bars	J4	Bars	H3	Bars	B1	Bars	B2	Bars	F	Bars	J4		H3		J3		H1		H2		S = 4 ft	S = 4 ft	HT = 4 ft	HT = 5 ft
	(ft-in)	Thick	Thick.	Thick	Thick.	Size	c to c	Size	c to c	Size	c to c	Size	c to c	Size	c to c	Size	c to c	Size	c to c	Size	c to c	G1	Size	c to c	Size	c to c	C4	K3	C7	Q10	C1	K2	C5	Q8	C6	Q9	in	in	in	in
HS20	0'-11"	9	8	8	8	4	7.0	4	11.5	4	23.5	4	23.5	4	11.5	4	9.5	4	8.0	5	11.5	16	5	11.5	4	14.0	0.63	0.89	0.67	0.66	0.56	0.44	0.92	0.66	0.50	0.49	56	56	60	72
HS20	2'-7"	8	8	8	8	4	11.5	4	11.5	4	23.5	4	23.5	4	11.5	4	11.5	4	10.0	5	11.5	16	5	11.5	4	14.0	0.54	0.91	0.60	0.62	0.56	0.44	0.92	0.66	0.41	0.29	56	56	59	71
HS20	4'-3"	8	8	8	8	4	11.5	4	11.5	4	23.5	4	23.5	4	11.5	4	11.5	4	11.5	5	11.5	16	5	11.5	4	14.0	0.52	0.91	0.52	0.53	0.53	0.44	0.53	0.66	0.35	0.32	56	56	59	71
HS20	5'-11"	8	8	8	8	4	11.5	4	11.5	4	23.5	4	23.5	4	11.5	4	11.5	4	11.5	5	11.5	16	5	11.5	4	14.0	0.50	0.91	0.48	0.51	0.49	0.44	0.50	0.58	0.34	0.34	56	56	59	71
HS20	7'-6"	8	8	8	8	4	11.5	4	11.5	4	23.5	4	23.5	4	11.5	4	11.5	4	11.5	5	11.5	16	5	11.5	4	14.0	0.49	0.91	0.47	0.49	0.48	0.44	0.48	0.52	0.33	0.33	56	56	59	71
HS20 MOD	0'-10"	10	8	8	8	4	6.0	4	11.5	4	23.5	4	23.5	4	11.5	4	8.5	4	7.0	5	11.5	16	5	11.5	4	14.0	0.64	0.88	0.65	0.66	0.56	0.45	0.92	0.66	0.52	0.66	56	56	61	73
HS20 MOD	2'-7"	8	8	8	8	4	11.5	4	11.5	4	23.5	4	23.5	4	11.5	4	11.5	4	8.0	5	11.5	16	5	11.5	4	14.0	0.55	0.91	0.61	0.66	0.56	0.44	0.92	0.66	0.42	0.27	56	56	59	71
HS20 MOD	4'-3"	8	8	8	8	4	11.5	4	11.5	4	23.5	4	23.5	4	11.5	4	11.5	4	11.5	5	11.5	16	5	11.5	4	14.0	0.52	0.91	0.53	0.55	0.54	0.44	0.54	0.66	0.36	0.33	56	56	59	71
HS20 MOD	5'-11"	8	8	8	8	4	11.5	4	11.5	4	23.5	4	23.5	4	11.5	4	11.5	4	11.5	5	11.5	16	5	11.5	4	14.0	0.50	0.91	0.49	0.52	0.49	0.44	0.52	0.60	0.35	0.36	56	56	59	71
HS20 MOD	7'-6"	8	8	8	8	4	11.5	4	11.5	4	23.5	4	23.5	4	11.5	4	11.5	4	11.5	5	11.5	16	5	11.5	4	14.0	0.49	0.91	0.47	0.50	0.48	0.44	0.49	0.53	0.34	0.35	56	56	59	71
HS20 or HS20 MOD	9'-2"	8	8	8	8	4	11.5	4	11.5	4	23.5	4	23.5	4	11.5	4	11.5	4	11.5	5	11.5	0	5	11.5	4	14.0	0.48	0.91	0.46	0.49	0.48	0.44	0.45	0.48	0.33	0.31	56	56	59	71
HS20 or HS20 MOD	10'-10"	8	8	8	8	4	11.5	4	11.5	4	23.5	4	23.5	4	11.5	4	11.5	4	11.5	5	11.5	0	5	11.5	4	14.0	0.47	0.91	0.45	0.48	0.47	0.44	0.45	0.47	0.33	0.32	56	56	59	71
HS20 or HS20 MOD	12'-5"	8	8	8	8	4	11.5	4	11.5	4	23.5	4	23.5	4	11.5	4	11.5	4	11.5	5	11.5	0	5	11.5	4	14.0	0.47	0.91	0.45	0.48	0.47	0.44	0.45	0.47	0.33	0.33	56	56	59	71
HS20 or HS20 MOD	14'-1"	8	8	8	8	4	11.5	4	11.5	4	23.5	4	23.5	4	11.5	4	11.5	4	11.5	5	11.5	0	5	11.5	4	14.0	0.46	0.91	0.44	0.46	0.46	0.44	0.44	0.46	0.34	0.34	56	56	59	71
HS20 or HS20 MOD	15'-9"	8	8	8	8	4	11.5	4	11.5	4	23.5	4	23.5	4	11.5	4	11.5	4	11.5	5	11.5	0	5	11.5	4	14.0	0.46	0.91	0.44	0.46	0.46	0.44	0.44	0.46	0.34	0.34	56	56	59	71
HS20 or HS20 MOD	17'-5"	8	8	8	8	4	11.5	4	11.5	4	23.5	4	23.5	4	11.5	4	11.5	4	11.5	5	11.5	0	5	11.5	4	14.0	0.45	0.91	0.44	0.46	0.45	0.44	0.44	0.46	0.36	0.37	56	56	59	71
HS20 or HS20 MOD	19'-0"	8	9	8	8	4	11.5	4	11.5	4	23.5	4	23.5	4	11.5	4	11.5	4	11.5	5	11.5	0	5	11.5	4	14.0	0.45	0.91	0.43	0.46	0.45	0.43	0.44	0.46	0.36	0.37	56	56	60	72
HS20 or HS20 MOD	20'-8"	8	9	8	8	4	11.5	4	11.5	4	23.5	4	23.5	4	11.5	4	11.5	4	11.5	5	11.5	0	5	11.5	4	14.0	0.45	0.91	0.43	0.46	0.45	0.43	0.44	0.46	0.36	0.36	56	56	60	72
HS20 or HS20 MOD	22'-4"	8	9	8	8	4	11.5	4	11.5	4	23.5	4	23.5	4	11.5	4	11.5	4	11.5	5	11.5	0	5	11.5	4	14.0	0.45	0.91	0.43	0.46	0.45	0.43	0.44	0.46	0.36	0.36	56	56	60	72
HS20 or HS20 MOD	23'-11"	8	9	8	8	4	11.5	4	11.5	4	23.5	4	23.5	4	11.5	4	11.5	4	11.0	5	11.5	0	5	11.5	4	14.0	0.45	0.91	0.43	0.46	0.45	0.43	0.44	0.46	0.36	0.36	56	56	60	72
HS20 or HS20 MOD	25'-7"	8	10	8	8	4	11.5	4	11.0	4	22.0	4	22.0	4	11.5	4	11.5	4	11.5	5	11.5	0	5	11.5	4	14.0	0.45	0.91	0.43	0.46	0.45	0.42	0.44	0.46	0.36	0.36	56	56	61	73
HS20 or HS20 MOD	27'-3"	8	10	8	8	4	11.0	4	10.5	4	21.0	4	21.0	4	11.0	4	11.5	4	11.5	5	11.5	0	5	11.5	4	14.0	0.45	0.91	0.43	0.46	0.45	0.42	0.44	0.46	0.36	0.36	56	56	61	73
HS20 or HS20 MOD	28'-9"	9	10	8	8	4	11.5	4	10.5	4	23.5	4	23.5	4	11.0	4	11.0	4	11.0	5	11.5	0	5	11.5	4	14.0	0.45	0.90	0.43	0.46	0.45	0.43	0.44	0.46	0.36	0.37	56	56	62	74
HS20 or HS20 MOD	30'-5"	9	10	8	8	4	11.0	4	9.5	4	23.0	4	23.0	4	10.5	4	10.5	4	10.5	5	11.5	0	5	11.5	4	14.0	0.45	0.90	0.43	0.46	0.45	0.43	0.44	0.46	0.36	0.37	56	56	62	74
HS20 or HS20 MOD	32'-1"	9	11	8	8	4	11.0	4	9.0	4	21.5	4	21.5	4	11.0	4	10.5	4	11.5	5	11.5	0	5	11.5	4	14.0	0.45	0.90	0.43	0.46	0.45	0.42	0.44	0.46	0.36	0.37	56	56	63	75

SPAN (S) = 4 ft
HT (ft) = 6 or 7

	DESIGN FILL	MEMBER THICKNESSES				TOP SLAB BARS								BOTTOM SLAB BARS						WALL BARS						COEFFICIENTS (see note)										"C" Multiplier	"Q" Multiplier	"K" Multiplier	
		TS	BS	TX	TI	A1	Bars	J3	Bars	H1	Bars	H2	Bars	A2	Bars	J4	Bars	H3	Bars	B1	Bars	B2	Bars	F	Bars	J4		H3		J3		H1		H2		S = 4 ft	S = 4 ft	HT = 6 ft	HT = 7 ft
	(ft-in)	Thick	Thick.	Thick	Thick.	Size	c to c	Size	c to c	Size	c to c	Size	c to c	Size	c to c	Size	c to c	Size	c to c	Size	c to c	G1	Size	c to c	Size	c to c	C4	K3	C7	Q10	C1	K2	C5	Q8	C6	Q9	in	in	in	in
HS20	0'-11"	9	8	8	8	4	7.0	4	11.5	4	23.5	4	23.5	4	11.5	4	8.0	4	7.5	5	11.5	16	5	11.5	4	14.0	0.76	0.92	0.72	0.66	0.56	0.32	0.92	0.66	0.52	0.66	56	56	84	96
HS20	2'-7"	8	8	8	8	4	11.5	4	11.5	4	23.5	4	23.5	4	11.5	4	11.0	4	9.0	5	11.5	16	5	11.5	4	14.0	0.70	0.93	0.66	0.62	0.56	0.31	0.92	0.66	0.41	0.33	56	56	83	95
HS20	4'-3"	8	8	8	8	4	11.5	4	11.5	4	23.5	4	23.5	4	11.5	4	11.5	4	11.5	5	11.5	16	5	11.5	4	14.0	0.65	0.93	0.54	0.54	0.60	0.31	0.92	0.66	0.35	0.33	56	56	83	95
HS20	5'-11"	8	8	8	8	4	11.5	4	11.5	4	23.5	4	23.5	4	11.5	4	11.5	4	11.5	5	11.5	16	5	11.5	4	14.0	0.63	0.93	0.49	0.50	0.57	0.31	0.92	0.59	0.34	0.34	56	56	83	95
HS20	7'-6"	8	8	8	8	4	11.5	4	11.5	4	23.5	4	23.5	4	11.5	4	11.0	4	11.5	5	11.5	16	5	11.5	4	14.0	0.62	0.93	0.48	0.49	0.64	0.31	0.50	0.52	0.33	0.34	56	56	83	95
HS20 MOD	0'-9"	11	8	8	8	4	6.0	4	11.0	4	18.5	4	18.5	4	11.5	4	7.0	4	7.0	5	11.5	16	5	11.5	4	14.0	0.74	0.90	0.70	0.66	0.56	0.34	0.92	0.66	0.47	0.66	56	56	86	98
HS20 MOD	2'-7"	8	8	8	8	4	11.5	4	11.5	4	23.5	4	23.5	4	11.5	4	9.5	4	7.5	5	11.5	16	5	11.5	4	14.0	0.70	0.93	0.68	0.66	0.56	0.31	0.92	0.66	0.42	0.32	56	56	83	95
HS20 MOD	4'-3"	8	8	8	8	4	11.5	4	11.5	4	23.5	4	23.5	4	11.5	4	11.5	4	11.5	5	11.5	16	5	11.5	4	14.0	0.65	0.93	0.55	0.55	0.60	0.31	0.92	0.66	0.37	0.35	56	56	83	95
HS20 MOD	5'-11"	8	8	8	8	4	11.5	4	11.5	4	23.5	4	23.5	4	11.5	4	11.5	4	11.5	5	11.5	16	5	11.5	4	14.0	0.63	0.93	0.50	0.52	0.57	0.31	0.92	0.66	0.35	0.36	56	56	83	95
HS20 MOD	7'-6"	8	8	8	8	4	11.5	4	11.5	4	23.5	4	23.5	4	11.5	4	11.0	4	11.5	5	11.5	16	5	11.5	4	14.0	0.62	0.93	0.49	0.50	0.64	0.31	0.51	0.54	0.34	0.35	56	56	83	95
HS20 or HS20 MOD	9'-2"	8	8	8	8	4	11.5	4	11.5	4	23.5	4	23.5	4	11.5	4	11.0	4	11.5	5	11.5	0	5	11.5	4	14.0	0.61	0.93	0.47	0.49	0.63	0.31	0.46	0.48	0.33	0.31	56	56	83	95
HS20 or HS20 MOD	10'-10"	8	8	8	8	4	11.5	4	11.5	4	23.5	4	23.5	4	11.5	4	9.5	4	11.5	5	11.5	0	5	11.5	4	14.0	0.60	0.93	0.47	0.48	0.62	0.31	0.45	0.47	0.33	0.32	56	56	83	95
HS20 or HS20 MOD	12'-5"	8	8	8	8	4	11.5	4	11.0	4	23.5	4	23.5	4	11.5	4	9.0	4	11.5	5	11.5	0	5	11.5	4	14.0	0.59	0.93	0.46	0.47	0.60	0.31	0.45	0.47	0.33	0.33	56	56	83	95
HS20 or HS20 MOD	14'-1"	8	8	8	8	4	11.5	4	11.0	4	23.5	4	23.5	4	11.5	4	8.5	4	11.5	5	11.5	0	5	11.5	4	14.0	0.58	0.93	0.44	0.45	0.60	0.31	0.44	0.46	0.34	0.34	56	56	83	95
HS20 or HS20 MOD	15'-9"	8	8	8	8	4	11.5	4	9.5	4	23.5	4	23.5	4	11.5	4	7.5	4	11.5	5	11.5	0	5	11.5	4	14.0	0.58	0.93	0.44	0.45	0.59	0.31	0.44	0.46	0.34	0.34	56	56	83	95
HS20 or HS20 MOD	17'-5"	8	8	8	8	4	11.5	4	9.0	4	23.5	4	23.5	4	11.5	4	7.0	4	11.5	5	11.5	0	5	11.5	4	14.0	0.57	0.93	0.44	0.45	0.58	0.31	0.44	0.45	0.34	0.34	56	56	83	95
HS20 or HS20 MOD	19'-0"	8	9	8	8	4	11.5	4	8.5	4	23.5	4	23.5	4	11.5	4	8.0	4	11.5	5	11.5	0	5	11.5	4	14.0	0.59	0.93	0.45	0.45	0.58	0.31	0.44	0.45	0.36	0.36	56	56	84	96
HS20 or HS20 MOD	20'-8"	8	9	8	8	4	11.5	4	7.5	4	23.5	4	23.5	4	11.5	4	7.0	4	11.5	5	11.5	0	5	11.5	4	14.0	0.58	0.93	0.44	0.45	0.58	0.31	0.44	0.45	0.36	0.37	56	56	84	96
HS20 or HS20 MOD	22'-4"	8	9	8	8	4	11.5	4	7.0	4	23.5	4	23.5	4	11.5	4	7.0	4	11.5	5	11.5	0	5	11.5	4	14.0	0.58	0.93	0.44	0.45	0.57	0.31	0.44	0.45	0.36	0.37	56	56	84	96
HS20 or HS20 MOD	23'-11"	8	9	9	8	4	11.5	4	8.5	4	23.5	4	23.5	4	11.5	4	7.0	4	11.0	5	11.5	0	5	11.5	4	14.0	0.56	0.93	0.44	0.45	0.56	0.31	0.44	0.45	0.36	0.36	57	56	84	96
HS20 or HS20 MOD	25'-7"	8	10	9	8	4	11.5	4	7.5	4	23.5	4	23.5	4	11.0	4	7.5	4	11.5	5	11.5	0	5	11.5	4	14.0	0.58	0.93	0.45	0.45	0.56	0.30	0.44	0.45	0.36	0.36	57	56	85	97
HS20 or HS20 MOD	27'-3"	8	10	9	8	4	11.5	4	7.0	4	22.0	4	22.0	4	11.5	4	7.0	4	11.5	5	11.5	0	5	11.5	4	14.0	0.57	0.93	0.45	0.45	0.56	0.30	0.44	0.45	0.36	0.36	57	56	85	97
HS20 or HS20 MOD	28'-9"	9	10	9	8	4	11.5	4	7.0	4	23.5	4	23.5	4	11.5	4	7.0	4	11.0	5	11.5	0	5	11.5	4	14.0	0.57	0.92	0.44	0.45	0.57	0.31	0.44	0.46	0.36	0.37	57	56	86	98
HS20 or HS20 MOD	30'-5"	9	10	10	8	4	11.5	4	8.0	4	23.5	4	23.5	4	11.0	4	7.0	4	10.5	5	11.5	0	5	11.5	4	14.0	0.57	0.92	0.44	0.45	0.56	0.31	0.44	0.46	0.36	0.37	57	56	86	98
HS20 or HS20 MOD	32'-1"	9	11	10	8	4	11.5	4	7.5	4	22.0	4	22.0	4	10.0	4	7.5	4	11.5	5	11.5	0	5	11.5	4	14.0	0.57	0.92	0.44	0.45	0.57	0.31	0.44	0.46	0.36	0.37	57	56	87	99

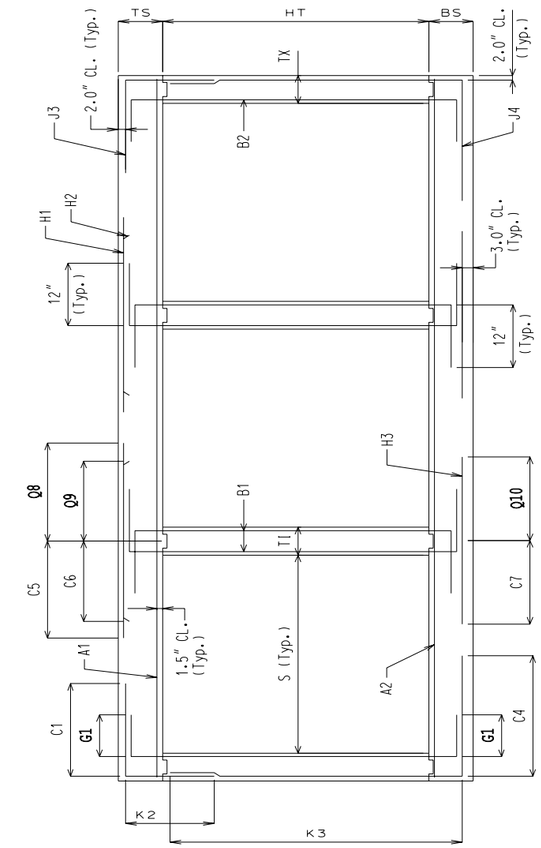

SECTION THRU BOX

NOTE:

IF DESIGN FILL FALLS BETWEEN TABULATED FILLS, USE THE ADJACENT TABULATED FILL WHICH YIELDS THE GREATER MEMBER THICKNESS. IF THE MEMBER THICKNESSES ARE EQUAL, USE THE ADJACENT TABULATED FILL WHICH YIELDS THE GREATER AREA OF REINFORCEMENT.

SPECIAL DESIGNS ARE REQUIRED WHEN THE DESIGN FILL IS OUTSIDE THE RANGE OF TABULATED FILLS.

ALL DIMENSIONS ARE IN inch UNLESS OTHERWISE SPECIFIED.

COEFFICIENTS: DIMENSIONS MARKED WITH C# OR K# ARE THE PRODUCT OF THE COEFFICIENT AND ITS ASSOCIATED MULTIPLIER.

DESIGN FILL HEIGHT GIVEN IN THE TABLES IS THE HEIGHT FROM THE TOP OF THE EARTH FILL OR ROADWAY TO THE TOP OF THE TOP SLAB.

ALL CULVERTS MEET STRENGTH REQUIREMENTS FOR MILITARY 24 kips TANDEM AXLE LOADING.

MISSOURI HIGHWAY AND TRANSPORTATION COMMISSION

CONCRETE TRIPLE BOX CULVERT

MEMBER SIZES AND REINFORCEMENT

(HS20 & HS20 MOD. LOADING)

DATE: | EFFECTIVE: 04-01-2002 | 703.85B | 1/13

	DESIGN FILL	MEMBER THICKNESSES				Span (S) = 5 ft; HT (ft) = 4 or 5 or 6																																		
						TOP SLAB BARS								BOTTOM SLAB BARS						WALL BARS								COEFFICIENTS (see note)										"C" Multiplier	"Q" Multiplier	"K" Multiplier		
		TS	BS	TX	TI	A1	Bars	J3	Bars	H1	Bars	H2	Bars	A2	Bars	J4	Bars	H3	Bars	B1	Bars		B2	Bars	F	Bars	J4		H3		J3		H1		H2		S = 5 ft	S = 5 ft	HT = 4 ft	HT = 5 ft	HT = 6 ft
	(ft-in)	Thick	Thick.	Thick	Thick.	Size	c to c	Size	c to c	Size	c to c	Size	c to c	Size	c to c	Size	c to c	Size	c to c	Size	c to c	G1	Size	c to c	Size	c to c	C4	K3	C7	Q10	C1	K2	C5	Q8	C6	Q9	in	in	in	in	in
HS20	0'-9"	11	12	8	8	4	7.0	4	11.0	4	16.5	4	16.5	4	9.0	5	8.5	4	9.0	5	11.5	16	5	9.0	4	14.0	0.72	0.89	0.68	0.63	0.51	0.44	0.88	0.63	0.47	0.63	68	68	66	78	90
HS20	2'-7"	8	8	8	8	4	10.0	4	11.5	4	18.0	4	18.0	4	11.5	4	8.0	4	6.0	5	11.0	16	5	11.5	4	14.0	0.50	0.92	0.56	0.58	0.61	0.44	0.88	0.63	0.37	0.27	68	68	59	71	83
HS20	4'-3"	8	8	8	8	4	11.5	4	11.5	4	23.5	4	23.5	4	11.5	4	11.5	4	9.0	5	11.5	16	5	11.5	4	14.0	0.48	0.92	0.48	0.51	0.53	0.44	0.50	0.63	0.35	0.35	68	68	59	71	83
HS20	5'-11"	8	8	8	8	4	11.5	4	11.5	4	23.5	4	23.5	4	11.5	4	11.5	4	10.0	5	11.5	16	5	11.5	4	14.0	0.45	0.92	0.45	0.47	0.45	0.44	0.47	0.54	0.34	0.34	68	68	59	71	83
HS20	7'-6"	8	8	8	8	4	11.5	4	11.5	4	23.5	4	23.5	4	11.5	4	11.5	4	10.0	5	11.5	16	5	11.5	4	14.0	0.44	0.92	0.43	0.46	0.43	0.44	0.44	0.48	0.33	0.33	68	68	59	71	83
HS20 MOD	0'-9"	11	11	8	8	5	8.5	4	10.5	4	12.5	4	12.5	4	7.5	5	6.5	4	7.0	5	9.0	16	5	6.5	4	14.0	0.59	0.89	0.68	0.63	0.51	0.44	0.88	0.63	0.48	0.63	68	68	65	77	89
HS20 MOD	2'-7"	8	8	8	8	4	8.0	4	9.0	4	14.5	4	14.5	4	10.5	4	6.5	5	7.5	5	8.5	16	5	11.5	4	14.0	0.50	0.92	0.58	0.67	0.51	0.44	0.88	0.63	0.37	0.29	68	68	59	71	83
HS20 MOD	4'-3"	8	8	8	8	4	11.5	4	11.5	4	23.5	4	23.5	4	11.5	4	11.5	4	8.0	5	11.5	16	5	11.5	4	14.0	0.48	0.92	0.50	0.52	0.54	0.44	0.51	0.63	0.35	0.36	68	68	59	71	83
HS20 MOD	5'-11"	8	8	8	8	4	11.5	4	11.5	4	23.5	4	23.5	4	11.5	4	11.5	4	9.0	5	11.5	16	5	11.5	4	14.0	0.46	0.92	0.45	0.48	0.45	0.44	0.48	0.57	0.34	0.35	68	68	59	71	83
HS20 MOD	7'-6"	8	8	8	8	4	11.5	4	11.5	4	23.5	4	23.5	4	11.5	4	11.5	4	9.0	5	11.5	16	5	11.5	4	14.0	0.44	0.92	0.43	0.46	0.43	0.44	0.45	0.50	0.33	0.34	68	68	59	71	83
HS20 or HS20 MOD	9'-2"	8	8	8	8	4	11.5	4	11.5	4	23.5	4	23.5	4	11.5	4	11.5	4	9.0	5	11.5	0	5	11.5	4	14.0	0.43	0.92	0.43	0.45	0.42	0.44	0.41	0.44	0.31	0.30	68	68	59	71	83
HS20 or HS20 MOD	10'-10"	8	8	8	8	4	11.5	4	11.5	4	23.5	4	23.5	4	11.5	4	11.5	4	8.5	5	11.5	0	5	11.5	4	14.0	0.42	0.92	0.42	0.44	0.42	0.44	0.41	0.43	0.32	0.30	68	68	59	71	83
HS20 or HS20 MOD	12'-5"	8	9	8	8	4	11.5	4	11.5	4	23.5	4	23.5	4	11.5	4	11.5	4	9.5	5	11.5	0	5	11.5	4	14.0	0.41	0.92	0.41	0.44	0.41	0.43	0.41	0.43	0.32	0.31	68	68	60	72	84
HS20 or HS20 MOD	14'-1"	8	9	8	8	4	11.5	4	11.5	4	22.0	4	22.0	4	11.5	4	11.5	4	9.0	5	11.5	0	5	11.5	4	14.0	0.41	0.92	0.41	0.44	0.41	0.43	0.41	0.43	0.32	0.31	68	68	60	72	84
HS20 or HS20 MOD	15'-9"	8	9	8	8	4	11.5	4	10.5	4	20.0	4	20.0	4	10.5	4	11.0	4	8.5	5	11.5	0	5	11.5	4	14.0	0.41	0.92	0.41	0.43	0.41	0.43	0.41	0.43	0.32	0.31	68	68	60	72	84
HS20 or HS20 MOD	17'-5"	8	9	8	8	4	11.5	4	10.5	4	19.5	4	19.5	4	10.0	4	10.5	4	9.0	5	11.5	0	5	11.5	4	14.0	0.40	0.92	0.39	0.42	0.41	0.43	0.41	0.42	0.32	0.32	68	68	60	72	84
HS20 or HS20 MOD	19'-0"	8	10	8	8	4	10.5	4	9.0	4	17.5	4	17.5	4	10.5	4	10.5	4	10.0	5	11.5	0	5	11.5	4	14.0	0.40	0.92	0.39	0.42	0.41	0.42	0.41	0.42	0.32	0.31	68	68	61	73	85
HS20 or HS20 MOD	20'-8"	8	10	8	8	4	9.5	4	9.0	4	16.5	4	16.5	4	9.5	4	9.0	4	9.0	5	11.5	0	5	11.5	4	14.0	0.40	0.92	0.39	0.42	0.40	0.42	0.41	0.42	0.32	0.31	68	68	61	73	85
HS20 or HS20 MOD	22'-3"	9	10	8	8	4	10.0	4	8.5	4	18.5	4	18.5	4	9.0	4	9.0	4	8.5	5	11.5	0	5	11.5	4	14.0	0.40	0.91	0.39	0.43	0.40	0.43	0.40	0.43	0.31	0.32	68	68	62	74	86
HS20 or HS20 MOD	23'-10"	9	11	8	8	4	9.5	4	8.0	4	16.5	4	16.5	4	9.0	4	8.5	4	9.0	5	11.5	0	5	11.5	4	14.0	0.40	0.91	0.39	0.43	0.40	0.42	0.41	0.43	0.32	0.32	68	68	63	75	87
HS20 or HS20 MOD	25'-6"	9	11	8	8	4	9.0	4	7.0	4	15.5	4	15.5	4	9.0	4	8.0	4	9.0	5	11.5	0	5	11.5	4	14.0	0.40	0.91	0.39	0.43	0.40	0.42	0.40	0.43	0.32	0.32	68	68	63	75	87
HS20 or HS20 MOD	27'-1"	10	11	8	8	4	9.0	4	7.0	4	17.5	4	17.5	4	8.5	4	7.0	4	8.0	5	11.5	0	5	11.5	4	14.0	0.40	0.90	0.39	0.43	0.40	0.43	0.40	0.43	0.31	0.32	68	68	64	76	88
HS20 or HS20 MOD	28'-8"	10	12	8	8	4	9.0	4	7.0	4	16.5	4	16.5	4	9.0	4	7.0	4	9.0	5	11.5	0	5	11.5	4	14.0	0.40	0.90	0.39	0.43	0.40	0.43	0.40	0.43	0.32	0.32	68	68	65	77	89
HS20 or HS20 MOD	30'-4"	10	12	9	8	4	8.0	4	7.5	4	15.0	4	15.0	4	8.5	4	8.5	4	8.0	5	11.5	0	5	11.5	4	14.0	0.40	0.90	0.39	0.43	0.41	0.43	0.40	0.43	0.31	0.32	69	68	65	77	89
HS20 or HS20 MOD	31'-11"	11	12	9	8	4	8.5	4	7.5	4	16.5	4	16.5	4	8.0	4	7.5	4	7.5	5	11.5	0	5	11.5	4	14.0	0.40	0.89	0.39	0.43	0.41	0.44	0.40	0.43	0.31	0.32	69	68	66	78	90

	DESIGN FILL	MEMBER THICKNESSES				SPAN (S) = 5 ft; HT (ft) = 7 or 8																																		
						TOP SLAB BARS								BOTTOM SLAB BARS						WALL BARS								COEFFICIENTS (see note)										"C" Multiplier	"Q" Multiplier	"K" Multiplier	
		TS	BS	TX	TI	A1	Bars	J3	Bars	H1	Bars	H2	Bars	A2	Bars	J4	Bars	H3	Bars	B1	Bars		B2	Bars	F	Bars	J4		H3		J3		H1		H2		S = 5 ft	S = 5 ft	HT = 7 ft	HT = 8 ft
	(ft-in)	Thick	Thick.	Thick	Thick.	Size	c to c	Size	c to c	Size	c to c	Size	c to c	Size	c to c	Size	c to c	Size	c to c	Size	c to c	G1	Size	c to c	Size	c to c	C4	K3	C7	Q10	C1	K2	C5	Q8	C6	Q9	in	in	in	in
HS20	0'-10"	10	9	8	8	5	9.0	4	9.0	4	12.5	4	12.5	4	8.0	5	6.5	5	10.5	5	8.5	16	5	6.0	4	14.0	0.72	0.92	0.69	0.67	0.51	0.28	0.88	0.63	0.48	0.63	68	68	98	110
HS20	2'-7"	8	8	8	8	4	9.5	4	9.0	4	18.0	4	18.0	4	11.5	4	6.0	4	6.0	5	11.5	16	5	11.5	4	14.0	0.63	0.94	0.61	0.58	0.51	0.27	0.88	0.63	0.37	0.31	68	68	95	107
HS20	4'-3"	8	8	8	8	4	11.5	4	11.5	4	23.5	4	23.5	4	11.5	4	8.0	4	9.0	5	11.5	16	5	11.5	4	14.0	0.59	0.94	0.51	0.51	0.58	0.27	0.88	0.63	0.35	0.36	68	68	95	107
HS20	5'-11"	8	8	8	8	4	11.5	4	11.0	4	23.5	4	23.5	4	11.5	4	8.0	4	9.5	5	11.5	16	5	11.5	4	14.0	0.56	0.94	0.46	0.47	0.59	0.27	0.48	0.56	0.34	0.35	68	68	95	107
HS20	7'-6"	8	8	8	8	4	11.5	4	10.5	4	23.5	4	23.5	4	11.5	4	7.0	4	9.5	5	11.5	16	5	11.5	4	14.0	0.54	0.94	0.44	0.45	0.57	0.27	0.46	0.49	0.33	0.34	68	68	95	107
HS20 MOD	0'-9"	11	11	8	8	5	8.5	4	9.0	5	18.5	5	18.5	4	6.5	6	8.5	4	7.0	5	11.0	16	5	7.0	4	14.0	0.76	0.92	0.68	0.63	0.51	0.29	0.89	0.67	0.50	0.67	68	68	101	113
HS20 MOD	2'-7"	8	9	8	8	4	7.5	4	8.0	4	14.5	4	14.5	4	10.0	4	6.0	5	7.5	5	10.0	16	5	11.5	4	14.0	0.67	0.94	0.68	0.67	0.51	0.27	0.88	0.63	0.37	0.33	68	68	96	108
HS20 MOD	4'-3"	8	8	8	8	4	11.5	4	10.5	4	23.5	4	23.5	4	11.5	5	11.5	5	11.5	5	11.5	16	5	11.5	4	14.0	0.60	0.94	0.53	0.53	0.58	0.27	0.88	0.63	0.35	0.37	68	68	95	107
HS20 MOD	5'-11"	8	8	8	8	4	11.5	4	10.5	4	23.5	4	23.5	4	11.5	5	11.5	5	11.5	5	11.5	16	5	11.5	4	14.0	0.57	0.94	0.47	0.49	0.59	0.27	0.50	0.63	0.34	0.35	68	68	95	107
HS20 MOD	7'-6"	8	8	8	8	4	11.5	4	9.5	4	23.5	4	23.5	4	11.5	5	11.0	5	11.5	5	11.5	16	5	11.5	4	14.0	0.55	0.94	0.45	0.47	0.57	0.27	0.47	0.51	0.33	0.34	68	68	95	107
HS20 or HS20 MOD	9'-2"	8	8	8	8	4	11.5	4	9.0	4	23.5	4	23.5	4	11.5	4	7.0	4	9.0	5	11.5	0	5	11.5	4	14.0	0.53	0.94	0.43	0.45	0.55	0.27	0.42	0.44	0.31	0.30	68	68	95	107
HS20 or HS20 MOD	10'-10"	8	8	8	8	4	11.5	4	8.5	4	23.5	4	23.5	4	11.5	4	6.5	4	8.0	5	11.5	0	5	11.5	4	14.0	0.52	0.94	0.43	0.44	0.53	0.27	0.42	0.43	0.31	0.31	68	68	95	107
HS20 or HS20 MOD	12'-5"	8	9	8	8	4	11.5	4	7.5	4	23.5	4	23.5	4	11.5	4	7.0	4	9.5	5	11.5	0	5	11.5	4	14.0	0.53	0.94	0.43	0.44	0.52	0.27	0.41	0.43	0.32	0.31	68	68	96	108
HS20 or HS20 MOD	14'-1"	8	9	8	8	4	11.5	4	7.0	4	22.0	4	22.0	4	11.5	4	7.0	4	9.0	5	11.5	0	5	11.5	4	14.0	0.52	0.94	0.42	0.43	0.51	0.27	0.41	0.43	0.32	0.31	68	68	96	108
HS20 or HS20 MOD	15'-9"	8	9	8	8	4	11.5	4	6.5	4	20.0	4	20.0	4	11.0	4	6.5	4	8.5	5	11.5	0	5	11.5	4	14.0	0.51	0.94	0.42	0.43	0.51	0.27	0.41	0.43	0.32	0.31	68	68	96	108
HS20 or HS20 MOD	17'-5"	8	9	8	8	4	11.5	4	6.5	4	20.0	4	20.0	4	10.5	4	6.0	4	9.0	5	11.5	0	5	11.5	4	14.0	0.51	0.94	0.40	0.42	0.50	0.27	0.40	0.42	0.31	0.32	68	68	96	108
HS20 or HS20 MOD	19'-0"	8	10	9	8	4	11.0	4	7.0	4	17.5	4	17.5	4	11.0	4	7.0	4	10.0	5	11.5	0	5	11.5	4	14.0	0.51	0.94	0.41	0.42	0.50	0.27	0.41	0.42	0.32	0.32	69	68	97	109
HS20 or HS20 MOD	20'-8"	8	10	9	8	4	10.0	4	7.0	4	16.5	4	16.5	4	10.0	4	6.5	4	9.0	5	11.5	0	5	11.5	4	14.0	0.51	0.94	0.41	0.42	0.50	0.27	0.41	0.42	0.31	0.31	69	68	97	109
HS20 or HS20 MOD	22'-3"	9	10	9	8	4	11.0	4	6.5	4	19.0	4	19.0	4	9.5	4	6.0	4	8.5	5	11.5	0	5	11.5	4	14.0	0.50	0.93	0.40	0.42	0.50	0.27	0.40	0.42	0.31	0.32	69	68	98	110
HS20 or HS20 MOD	23'-10"	9	11	10	8	4	10.5	4	7.0	4	17.0	4	17.0	4	10.0	4	7.0	4	9.0	5	11.5	0	5	11.5	4	14.0	0.51	0.93	0.40	0.42	0.50	0.27	0.40	0.42	0.31	0.32	69	68	99	111
HS20 or HS20 MOD	25'-6"	9	11	10	8	4	9.5	4	6.5	4	16.5	4	16.5	4	9.5	4	6.5	4	8.5	5	11.5	0	5	11.5	4	14.0	0.50	0.93	0.40	0.42	0.50	0.27	0.40	0.42	0.31	0.32	69	68	99	111
HS20 or HS20 MOD	27'-1"	10	11	10	8	4	9.5	4	6.0	4	18.0	4	18.0	4	9.0	4	6.0	4	8.0	5	11.5	0	5	11.5	4	14.0	0.50	0.92	0.40	0.42	0.50	0.28	0.40	0.42	0.31	0.32	69	68	100	112
HS20 or HS20 MOD	28'-8"	10	12	10	8	4	9.5	5	9.0	4	16.5	4	16.5	4	9.0	4	6.0	4	9.0	5	11.5	0	5	11.5	4	14.0	0.51	0.93	0.40	0.41	0.51	0.29	0.40	0.42	0.31	0.32	69	68	101	113
HS20 or HS20 MOD	30'-4"	10	12	11	8	4	9.0	4	6.5	4	16.0	4	16.0	4	9.0	4	6.5	4	8.0	5	11.5	0	5	11.5	4	14.0	0.51	0.93	0.40	0.41	0.50	0.28	0.40	0.42	0.31	0.32	70	68	101	113
HS20 or HS20 MOD	31'-11"	11	12	11	8	4	9.0	4	6.0	4	17.5	4	17.5	4	8.5	4	6.0	4	7.5	5	11.5	0	5	11.5	4	14.0	0.51	0.92	0.39	0.42	0.51	0.28	0.39	0.43	0.31	0.32	70	68	102	114

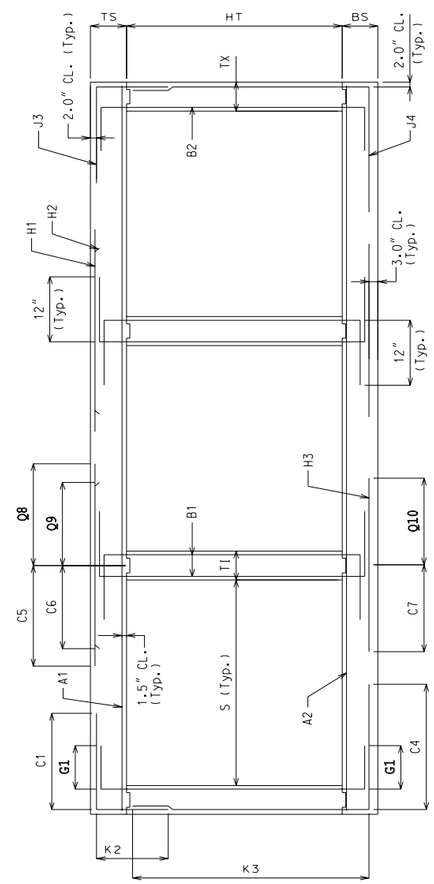

SECTION THRU BOX

NOTE: IF DESIGN FILL FALLS BETWEEN TABULATED FILLS, USE THE ADJACENT TABULATED FILL WHICH YIELDS THE GREATER MEMBER THICKNESS. IF THE MEMBER THICKNESSES ARE EQUAL, USE THE ADJACENT TABULATED FILL WHICH YIELDS THE GREATER AREA OF REINFORCEMENT.

SPECIAL DESIGNS ARE REQUIRED WHEN THE DESIGN FILL IS OUTSIDE THE RANGE OF TABULATED FILLS.

ALL DIMENSIONS ARE IN inch UNLESS OTHERWISE SPECIFIED.

COEFFICIENTS: DIMENSIONS MARKED WITH C# OR K# ARE THE PRODUCT OF THE COEFFICIENT AND ITS ASSOCIATED MULTIPLIER.

DESIGN FILL HEIGHT GIVEN IN THE TABLES IS THE HEIGHT FROM THE TOP OF THE EARTH FILL OR ROADWAY TO THE TOP OF THE TOP SLAB.

ALL CULVERTS MEET STRENGTH REQUIREMENTS FOR MILITARY 24 kips TANDEM AXLE LOADING.

MISSOURI HIGHWAY AND TRANSPORTATION COMMISSION

CONCRETE TRIPLE BOX CULVERT

MEMBER SIZES AND REINFORCEMENT

(HS20 & HS20 MOD. LOADING)

Loading	DESIGN FILL (ft-in)	TS Thick	BS Thick.	TX Thick	TI Thick.	A1 Size	A1 Bars c to c	J3 Size	J3 Bars c to c	H1 Size	H1 Bars c to c	H2 Size	H2 Bars c to c	A2 Size	A2 Bars c to c	J4 Size	J4 Bars c to c	H3 Size	H3 Bars c to c	B1 Size	B1 Bars c to c	B2 G1	B2 Size	B2 Bars c to c	F Size	F Bars c to c	J4 C4	J4 K3	H3 C7	H3 Q10	J3 C1	J3 K2	H1 C5	H1 Q8	H2 C6	H2 Q9	"C" Multiplier S = 6 ft (in)	"Q" Multiplier S = 6 ft (in)	"K" Multiplier HT = 4 ft (in)	"K" Multiplier HT = 5 ft (in)
Span (S) = 6 ft; HT (ft) = 4 or 5																																								
HS20	0'-9"	11	12	8	8	4	6.0	4	11.0	4	14.0	4	14.0	4	9.0	5	7.0	4	7.0	5	9.0	16	5	7.5	4	14.0	0.50	0.88	0.64	0.61	0.48	0.44	0.86	0.61	0.42	0.61	80	80	66	78
HS20	2'-7"	8	8	8	8	4	7.5	4	9.0	4	12.0	4	12.0	4	9.5	4	6.0	5	6.5	5	8.0	16	5	11.5	4	14.0	0.45	0.91	0.53	0.55	0.57	0.44	0.53	0.61	0.33	0.25	80	80	59	71
HS20	4'-3"	8	8	8	8	4	11.5	4	11.5	4	20.0	4	20.0	4	11.5	4	11.0	4	6.5	5	11.5	16	5	11.5	4	14.0	0.40	0.91	0.45	0.48	0.44	0.44	0.46	0.61	0.31	0.30	80	80	59	71
HS20	5'-11"	8	8	8	8	4	11.5	4	11.5	4	22.0	4	22.0	4	11.5	4	11.5	4	7.0	5	11.5	16	5	11.5	4	14.0	0.37	0.91	0.42	0.44	0.38	0.44	0.43	0.49	0.30	0.30	80	80	59	71
HS20	7'-6"	8	8	8	8	4	11.5	4	11.5	4	21.0	4	21.0	4	10.5	4	11.5	4	6.5	5	11.5	16	5	11.5	4	14.0	0.36	0.91	0.40	0.43	0.35	0.44	0.41	0.44	0.29	0.30	80	80	59	71
HS20 MOD	0'-7"	13	13	8	8	5	9.0	4	9.0	4	12.5	4	12.5	4	7.5	5	6.5	4	6.5	5	9.0	16	5	6.0	4	14.0	0.48	0.86	0.65	0.61	0.48	0.45	0.86	0.61	0.45	0.61	80	80	69	81
HS20 MOD	2'-6"	9	9	8	8	4	7.0	4	8.0	5	18.0	5	18.0	4	9.0	4	6.0	5	7.0	5	7.0	16	5	11.5	4	14.0	0.44	0.90	0.55	0.64	0.58	0.44	0.86	0.64	0.34	0.28	80	80	61	73
HS20 MOD	4'-2"	9	9	8	8	4	11.5	4	11.0	4	17.5	4	17.5	4	11.0	4	9.0	5	8.5	5	11.0	16	5	11.5	4	14.0	0.40	0.90	0.47	0.51	0.45	0.44	0.47	0.61	0.32	0.31	80	80	61	73
HS20 MOD	5'-10"	9	8	8	8	4	12.5	4	11.5	4	22.5	4	22.5	4	11.0	4	11.0	4	6.0	5	11.5	16	5	11.5	4	14.0	0.38	0.89	0.43	0.45	0.39	0.44	0.44	0.55	0.31	0.32	80	80	60	72
HS20 MOD	7'-5"	9	8	8	8	4	12.5	4	11.5	4	22.5	4	22.5	4	10.0	4	11.5	4	6.0	5	11.5	16	5	11.5	4	14.0	0.36	0.89	0.40	0.43	0.34	0.44	0.42	0.48	0.30	0.31	80	80	60	72
HS20 MOD or HS20	9'-2"	8	9	8	8	4	11.5	4	11.5	4	19.0	4	19.0	4	9.5	4	11.5	5	9.0	5	11.5	0	5	11.5	4	14.0	0.34	0.91	0.40	0.43	0.34	0.44	0.39	0.41	0.29	0.26	80	80	60	72
HS20 MOD or HS20	10'-10"	8	9	8	8	4	10.5	4	11.5	4	17.5	4	17.5	4	10.0	4	11.5	4	7.0	5	11.5	0	5	11.5	4	14.0	0.33	0.91	0.39	0.42	0.34	0.43	0.39	0.40	0.29	0.27	80	80	60	72
HS20 MOD or HS20	12'-5"	8	9	8	8	4	9.5	4	11.0	4	16.5	4	16.5	4	9.0	4	11.5	4	6.5	5	11.5	0	5	11.5	4	14.0	0.33	0.91	0.38	0.42	0.33	0.43	0.39	0.40	0.28	0.27	80	80	60	72
HS20 MOD or HS20	14'-1"	8	10	8	8	4	9.0	4	10.5	4	14.5	4	14.5	4	9.0	4	11.5	4	7.0	5	11.5	0	5	11.5	4	14.0	0.32	0.91	0.37	0.41	0.33	0.42	0.39	0.40	0.28	0.27	80	80	61	73
HS20 MOD or HS20	15'-9"	8	10	8	8	4	8.0	4	9.0	4	13.0	4	13.0	4	8.5	4	11.5	4	7.0	5	11.5	0	5	11.5	4	14.0	0.32	0.91	0.37	0.41	0.33	0.42	0.39	0.40	0.28	0.27	80	80	61	73
HS20 MOD or HS20	17'-4"	9	11	8	8	4	8.5	4	9.5	4	14.5	4	14.5	4	9.0	4	11.5	4	7.0	5	11.5	0	5	11.5	4	14.0	0.31	0.90	0.37	0.41	0.32	0.42	0.38	0.40	0.28	0.28	80	80	63	75
HS20 MOD or HS20	18'-11"	9	11	8	8	4	8.0	4	9.0	4	13.0	4	13.0	4	8.0	4	11.0	4	7.0	5	11.5	0	5	11.5	4	14.0	0.31	0.90	0.37	0.41	0.32	0.42	0.38	0.40	0.28	0.28	80	80	63	75
HS20 MOD or HS20	20'-7"	9	11	8	8	4	7.5	4	9.0	4	12.5	4	12.5	4	7.5	4	11.0	4	7.0	5	11.5	0	5	11.5	4	14.0	0.30	0.90	0.36	0.40	0.32	0.42	0.38	0.40	0.28	0.28	80	80	63	75
HS20 MOD or HS20	22'-2"	10	12	8	8	4	8.0	4	9.0	4	13.5	4	13.5	4	8.0	4	11.0	4	7.5	5	11.5	0	5	11.5	4	14.0	0.30	0.89	0.36	0.40	0.31	0.43	0.38	0.40	0.28	0.29	80	80	65	77
HS20 MOD or HS20	23'-9"	10	12	8	8	4	7.0	4	9.0	4	12.5	4	12.5	4	7.0	4	10.5	4	7.0	5	11.5	0	5	11.5	4	14.0	0.30	0.89	0.36	0.40	0.31	0.43	0.38	0.40	0.28	0.28	80	80	65	77
HS20 MOD or HS20	25'-4"	11	12	8	8	4	7.5	4	9.0	4	14.0	4	14.0	4	7.0	4	9.5	4	6.5	5	11.5	0	5	11.5	4	14.0	0.30	0.88	0.36	0.40	0.30	0.44	0.37	0.41	0.28	0.29	80	80	66	78
HS20 MOD or HS20	27'-0"	11	13	8	8	4	7.0	4	8.5	4	12.5	4	12.5	4	7.0	4	10.5	4	7.0	5	11.5	0	5	11.5	4	14.0	0.30	0.88	0.36	0.40	0.31	0.43	0.37	0.41	0.28	0.29	80	80	67	79
HS20 MOD or HS20	28'-6"	12	13	8	8	4	7.0	4	9.0	4	14.0	4	14.0	4	7.0	4	9.0	4	6.5	5	11.5	0	5	11.5	4	14.0	0.30	0.87	0.36	0.41	0.30	0.44	0.37	0.41	0.28	0.29	80	80	68	80
HS20 MOD or HS20	30'-2"	12	14	8	8	4	7.0	4	8.0	4	12.5	4	12.5	4	7.0	4	9.0	4	7.0	5	11.5	0	5	11.5	4	14.0	0.29	0.87	0.36	0.41	0.30	0.43	0.37	0.41	0.28	0.29	80	80	69	81
HS20 MOD or HS20	31'-10"	12	14	8	8	4	6.5	4	7.5	4	12.5	4	12.5	4	6.5	4	9.0	4	6.5	5	11.5	0	5	11.5	4	14.0	0.29	0.87	0.36	0.41	0.30	0.43	0.37	0.41	0.28	0.29	80	80	69	81

Loading	DESIGN FILL (ft-in)	TS Thick	BS Thick.	TX Thick	TI Thick.	A1 Size	A1 Bars c to c	J3 Size	J3 Bars c to c	H1 Size	H1 Bars c to c	H2 Size	H2 Bars c to c	A2 Size	A2 Bars c to c	J4 Size	J4 Bars c to c	H3 Size	H3 Bars c to c	B1 Size	B1 Bars c to c	B2 G1	B2 Size	B2 Bars c to c	F Size	F Bars c to c	J4 C4	J4 K3	H3 C7	H3 Q10	J3 C1	J3 K2	H1 C5	H1 Q8	H2 C6	H2 Q9	"C" Multiplier S = 6 ft (in)	"Q" Multiplier S = 6 ft (in)	"K" Multiplier HT = 6 ft (in)	"K" Multiplier HT = 7 ft (in)
SPAN (S) = 6 ft; HT (ft) = 6 or 7																																								
HS20	0'-9"	11	12	8	8	5	9.0	4	9.5	4	13.0	4	13.0	4	7.5	5	6.5	4	7.0	5	11.0	16	5	8.0	4	14.0	0.69	0.91	0.66	0.61	0.48	0.32	0.86	0.61	0.43	0.61	80	80	90	102
HS20	2'-7"	8	8	8	8	4	7.0	4	8.0	4	12.0	4	12.0	4	9.0	5	8.5	5	6.5	5	9.0	16	5	11.5	4	14.0	0.48	0.93	0.54	0.55	0.48	0.31	0.86	0.61	0.33	0.26	80	80	83	95
HS20	4'-3"	8	8	8	8	4	11.5	4	10.5	4	20.0	4	20.0	4	11.0	4	8.0	4	6.0	5	11.5	16	5	11.5	4	14.0	0.44	0.93	0.46	0.48	0.51	0.31	0.47	0.61	0.31	0.31	80	80	83	95
HS20	5'-11"	8	8	8	8	4	11.5	4	11.5	4	21.5	4	21.5	4	11.0	4	9.0	4	6.5	5	11.5	16	5	11.5	4	14.0	0.42	0.93	0.42	0.44	0.43	0.31	0.44	0.51	0.30	0.31	80	80	83	95
HS20	7'-6"	8	8	8	8	4	11.5	4	11.0	4	21.0	4	21.0	4	10.0	4	8.5	4	6.5	5	11.5	16	5	11.5	4	14.0	0.41	0.93	0.40	0.43	0.40	0.31	0.42	0.45	0.29	0.30	80	80	83	95
HS20 MOD	0'-7"	13	13	8	8	5	9.0	4	9.0	5	18.0	5	18.0	4	6.5	5	6.0	4	6.5	5	11.0	16	5	7.0	4	14.0	0.69	0.89	0.66	0.61	0.48	0.33	0.86	0.64	0.47	0.64	80	80	93	105
HS20 MOD	2'-6"	9	9	8	8	4	7.0	4	7.0	5	18.0	5	18.0	4	8.5	5	8.5	5	6.5	5	8.0	16	5	11.5	4	14.0	0.48	0.92	0.56	0.64	0.48	0.32	0.86	0.64	0.34	0.32	80	80	85	97
HS20 MOD	4'-2"	9	9	8	8	4	11.5	4	9.5	4	19.5	4	19.5	4	10.5	4	8.0	5	8.5	5	11.5	16	5	11.5	4	14.0	0.45	0.92	0.49	0.51	0.54	0.32	0.48	0.61	0.32	0.33	80	80	85	97
HS20 MOD	5'-10"	9	8	8	8	4	12.5	4	10.5	4	22.0	4	22.0	4	10.0	4	8.0	4	6.0	5	11.5	16	5	11.5	4	14.0	0.43	0.92	0.43	0.45	0.44	0.32	0.46	0.61	0.31	0.31	80	80	84	96
HS20 MOD	7'-5"	9	9	8	8	4	11.5	4	10.5	4	19.5	4	19.5	4	9.5	4	9.5	4	6.0	5	11.5	16	5	11.5	4	14.0	0.41	0.93	0.41	0.44	0.40	0.32	0.42	0.49	0.30	0.31	80	80	85	97
HS20 MOD or HS20	9'-2"	8	9	8	8	4	11.0	4	9.5	4	19.0	4	19.0	4	11.0	4	10.5	4	7.0	5	11.5	0	5	11.5	4	14.0	0.39	0.93	0.40	0.43	0.39	0.31	0.39	0.41	0.28	0.27	80	80	84	96
HS20 MOD or HS20	10'-10"	8	9	8	8	4	10.5	4	9.0	4	17.5	4	17.5	4	9.5	4	9.0	4	7.0	5	11.5	0	5	11.5	4	14.0	0.38	0.93	0.39	0.42	0.38	0.31	0.39	0.41	0.28	0.27	80	80	84	96
HS20 MOD or HS20	12'-5"	8	9	8	8	4	9.5	4	8.5	4	16.5	4	16.5	4	9.0	4	9.0	4	6.5	5	11.5	0	5	11.5	4	14.0	0.38	0.93	0.39	0.42	0.38	0.31	0.38	0.40	0.28	0.27	80	80	84	96
HS20 MOD or HS20	14'-1"	8	10	8	8	4	9.0	4	7.5	4	14.5	4	14.5	4	9.0	4	8.5	4	7.0	5	11.5	0	5	11.5	4	14.0	0.38	0.93	0.38	0.41	0.38	0.30	0.39	0.40	0.28	0.27	80	80	85	97
HS20 MOD or HS20	15'-9"	8	10	8	8	4	8.0	4	7.0	4	13.0	4	13.0	4	8.5	4	7.5	4	7.0	5	11.5	0	5	11.5	4	14.0	0.37	0.93	0.38	0.41	0.38	0.30	0.38	0.40	0.28	0.27	80	80	85	97
HS20 MOD or HS20	17'-4"	9	11	8	8	4	8.5	4	7.0	4	14.5	4	14.5	4	9.0	4	7.0	4	7.0	5	11.5	0	5	11.5	4	14.0	0.37	0.92	0.38	0.41	0.37	0.31	0.38	0.41	0.28	0.28	80	80	87	99
HS20 MOD or HS20	18'-11"	9	11	8	8	4	8.0	4	6.5	4	13.0	4	13.0	4	8.0	4	7.0	4	7.0	5	11.5	0	5	11.5	4	14.0	0.37	0.92	0.37	0.41	0.37	0.31	0.38	0.40	0.28	0.28	80	80	87	99
HS20 MOD or HS20	20'-7"	9	11	8	8	4	8.0	4	6.0	4	12.5	4	12.5	4	7.5	4	6.5	4	7.0	5	11.5	0	5	11.5	4	14.0	0.37	0.92	0.36	0.40	0.37	0.31	0.38	0.40	0.28	0.28	80	80	87	99
HS20 MOD or HS20	22'-2"	10	12	8	8	4	8.0	4	6.0	4	14.0	4	14.0	4	8.0	4	6.5	4	7.5	5	11.5	0	5	11.5	4	14.0	0.37	0.92	0.36	0.40	0.37	0.31	0.37	0.40	0.28	0.29	80	80	89	101
HS20 MOD or HS20	23'-9"	10	12	9	8	4	7.5	4	6.5	4	13.0	4	13.0	4	7.5	4	7.0	4	7.0	5	11.5	0	5	11.5	4	14.0	0.37	0.92	0.36	0.40	0.38	0.31	0.38	0.40	0.28	0.29	81	80	89	101
HS20 MOD or HS20	25'-4"	11	12	9	8	4	8.0	4	6.5	4	14.5	4	14.5	4	7.0	4	6.5	4	6.5	5	11.5	0	5	11.5	4	14.0	0.37	0.91	0.37	0.40	0.37	0.32	0.37	0.41	0.28	0.29	81	80	90	102
HS20 MOD or HS20	27'-0"	11	13	9	8	4	7.0	4	6.0	4	13.0	4	13.0	4	7.0	4	6.5	4	7.0	5	11.5	0	5	11.5	4	14.0	0.37	0.91	0.36	0.40	0.37	0.32	0.37	0.41	0.28	0.29	81	80	91	103
HS20 MOD or HS20	28'-6"	12	13	9	8	4	7.5	4	6.0	4	14.5	4	14.5	4	7.0	4	6.0	4	6.5	5	11.5	0	5	11.5	4	14.0	0.37	0.90	0.36	0.40	0.37	0.32	0.37	0.41	0.28	0.29	81	80	92	104
HS20 MOD or HS20	30'-2"	12	14	10	8	4	7.0	4	6.5	4	13.0	4	13.0	4	7.0	4	7.0	4	7.0	5	11.5	0	5	11.5	4	14.0	0.38	0.90	0.36	0.40	0.38	0.32	0.37	0.41	0.28	0.29	81	80	93	105
HS20 MOD or HS20	31'-10"	12	14	10	8	4	7.0	4	6.0	4	12.5	4	12.5	4	7.0	4	6.5	4	6.5	5	11.5	0	5	11.5	4	14.0	0.37	0.90	0.36	0.40	0.38	0.32	0.37	0.41	0.28	0.29	81	80	93	105

Loading	DESIGN FILL (ft-in)	TS Thick	BS Thick.	TX Thick	TI Thick.	A1 Size	A1 Bars c to c	J3 Size	J3 Bars c to c	H1 Size	H1 Bars c to c	H2 Size	H2 Bars c to c	A2 Size	A2 Bars c to c	J4 Size	J4 Bars c to c	H3 Size	H3 Bars c to c	B1 Size	B1 Bars c to c	B2 G1	B2 Size	B2 Bars c to c	F Size	F Bars c to c	J4 C4	J4 K3	H3 C7	H3 Q10	J3 C1	J3 K2	H1 C5	H1 Q8	H2 C6	H2 Q9	"C" Multiplier S = 6 ft (in)	"Q" Multiplier S = 6 ft (in)	"K" Multiplier HT = 8 ft (in)	"K" Multiplier HT = 9 ft (in)
SPAN (S) = 6 ft; HT (ft) = 8 or 9																																								
HS20	0'-9"	11	12	9	9	5	9.0	4	9.0	4	13.0	4	13.0	4	7.0	5	6.0	4	7.0	5	11.5	16	5	8.5	4	14.0	0.69	0.93	0.66	0.61	0.49	0.25	0.86	0.61	0.44	0.61	81	81	114	126
HS20	2'-7"	8	9	9	9	4	7.0	4	7.0	4	12.0	4	12.0	4	8.5	5	7.5	5	6.5	5	9.5	16	5	11.5	4	14.0	0.58	0.95	0.60	0.56	0.49	0.24	0.86	0.61	0.33	0.28	81	81	108	120
HS20	4'-3"	8	8	9	9	4	11.5	4	9.0	4	19.5	4	19.5	4	10.5	5	9.0	4	6.0	5	11.5	16	5	11.5	4	14.0	0.52	0.95	0.47	0.48	0.56	0.24	0.86	0.61	0.31	0.31	81	81	107	119
HS20	5'-11"	8	8	9	9	4	11.5	4	9.0	4	21.5	4	21.5	4	10.0	4	6.0	4	6.5	5	11.5	16	5	11.5	4	14.0	0.49	0.95	0.43	0.44	0.53	0.24	0.44	0.52	0.30	0.31	81	81	107	119
HS20	7'-6"	8	8	9	9	4	11.5	4	9.0	4	21.0	4	21.0	4	9.5	5	9.0	4	6.5	5	11.5	16	5	11.5	4	14.0	0.49	0.95	0.40	0.43	0.49	0.24	0.42	0.46	0.30	0.30	81	81	107	119
HS20 MOD	0'-7"	13	11	9	9	5	8.5	4	7.5	5	16.0	5	16.0	4	6.5	6	7.5	5	9.0	5	11.0	16	5	6.0	4	14.0	0.72	0.91	0.66	0.64	0.49	0.27	0.86	0.64	0.49	0.64	81	81	115	127
HS20 MOD	2'-6"	9	9	9	9	4	6.5	4	6.5	5	18.0	5	18.0	4	8.0	5	7.0	5	6.5	5	9.0	16	5	11.5	4	14.0	0.58	0.94	0.59	0.64	0.49	0.25	0.86	0.64	0.34	0.35	81	81	109	121
HS20 MOD	4'-2"	9	9	9	9	4	11.5	4	8.5	4	20.0	4	20.0	4	11.0	4	7.0	4	6.5	5	11.5	16	5	11.5	4	14.0	0.53	0.94	0.50	0.51	0.49	0.25	0.86	0.61	0.32	0.34	81	81	109	121
HS20 MOD	5'-10"	9	9	9	9	4	12.0	4	9.0	4	22.5	4	22.5	4	11.0	4	7.0	4	7.0	5	11.5	16	5	11.5	4	14.0	0.51	0.94	0.44	0.46	0.54	0.25	0.46	0.61	0.31	0.31	81	81	109	121
HS20 MOD	7'-6"	8	9	9	9	4	11.5	4	9.0	4	19.5	4	19.5	4	11.0	4	6.5	4	7.0	5	11.5	16	5	11.5	4	14.0	0.49	0.95	0.42	0.44	0.49	0.24	0.43	0.47	0.30	0.30	81	81	108	120
HS20 MOD or HS20	9'-2"	8	9	9	9	4	11.0	4	8.0	4	19.0	4	19.0	4	10.5	4	7.0	4	7.0	5	11.5	0	5	11.5	4	14.0	0.48	0.95	0.41	0.43	0.48	0.24	0.39	0.42	0.29	0.27	81	81	108	120
HS20 MOD or HS20	10'-10"	8	9	9	9	4	10.5	4	7.0	4	17.5	4	17.5	4	9.5	4	6.0	4	7.0	5	11.5	0	5	11.5	4	14.0	0.47	0.95	0.40	0.42	0.47	0.24	0.39	0.41	0.29	0.27	81	81	108	120
HS20 MOD or HS20	12'-5"	8	9	9	9	4	9.5	4	7.0	4	16.5	4	16.5	4	9.0	5	9.0	4	6.5	5	11.5	0	5	11.5	4	14.0	0.47	0.95	0.39	0.41	0.46	0.24	0.39	0.40	0.29	0.28	81	81	108	120
HS20 MOD or HS20	14'-1"	8	10	9	9	4	9.0	4	6.5	4	14.5	4	14.5	4	9.0	4	6.5	4	7.0	5	11.5	0	5	11.5	4	14.0	0.47	0.95	0.40	0.41	0.46	0.24	0.39	0.40	0.29	0.28	81	81	109	121
HS20 MOD or HS20	15'-9"	8	10	9	9	4	8.5	5	9.0	4	13.0	4	13.0	4	8.5	5	9.0	4	7.0	5	11.5	0	5	11.5	4	14.0	0.47	0.95	0.39	0.41	0.46	0.26	0.39	0.40	0.29	0.28	81	81	109	121
HS20 MOD or HS20	17'-4"	9	11	9	9	4	9.0	5	8.5	4	14.5	4	14.5	4	9.0	5	8.5	4	7.0	5	11.5	0	5	11.5	4	14.0	0.47	0.94	0.39	0.40	0.47	0.28	0.38	0.40	0.29	0.28	81	81	111	123
HS20 MOD or HS20	18'-11"	9	11	10	9	4	8.5	4	6.0	4	13.5	4	13.5	4	8.5	4	6.0	4	7.0	5	11.5	0	5	11.5	4	14.0	0.46	0.94	0.38	0.40	0.45	0.24	0.38	0.40	0.28	0.28	82	81	111	123
HS20 MOD or HS20	20'-7"	9	11	10	9	4	8.5	4	6.0	4	13.0	4	13.0	4	8.0	5	9.0	4	7.0	5	11.5	0	5	11.5	4	14.0	0.46	0.94	0.37	0.39	0.45	0.24	0.38	0.40	0.28	0.28	82	81	111	123
HS20 MOD or HS20	22'-2"	10	12	10	9	4	9.0	5	8.5	4	14.5	4	14.5	4	8.5	5	8.5	4	7.5	5	11.5	0	5	11.5	4	14.0	0.47	0.93	0.37	0.39	0.46	0.29	0.38	0.40	0.28	0.29	82	81	113	125
HS20 MOD or HS20	23'-9"	10	12	10	9	4	8.0	5	8.0	4	13.0	4	13.0	4	8.0	5	7.5	4	7.0	5	11.5	0	5	11.0	4	14.0	0.46	0.93	0.37	0.39	0.46	0.26	0.38	0.40	0.28	0.29	82	81	113	125
HS20 MOD or HS20	25'-4"	11	12	11	9	4	8.5	5	9.0	4	14.5	4	14.5	4	7.5	5	8.5	4	6.5	5	11.5	0	5	11.5	4	14.0	0.46	0.93	0.37	0.39	0.46	0.27	0.37	0.40	0.28	0.29	82	81	114	126
HS20 MOD or HS20	27'-0"	11	13	11	9	4	8.0	5	8.5	4	13.5	4	13.5	4	7.5	5	8.5	4	7.0	5	11.5	0	5	11.0	4	14.0	0.47	0.93	0.37	0.39	0.46	0.29	0.37	0.40	0.28	0.29	82	81	115	127
HS20 MOD or HS20	28'-6"	12	13	11	9	4	7.5	5	8.0	4	14.5	4	14.5	4	7.5	5	7.5	4	6.5	5	11.5	0	5	11.0	4	14.0	0.46	0.92	0.37	0.39	0.47	0.30	0.37	0.40	0.28	0.29	82	81	116	128
HS20 MOD or HS20	30'-2"	12	14	12	9	4	7.5	5	8.5	4	13.5	4	13.5	4	7.0	5	8.5	4	7.0	5	11.5	0	5	11.5	4	14.0	0.47	0.92	0.37	0.39	0.47	0.27	0.37	0.40	0.28	0.29	83	81	117	129
HS20 MOD or HS20	31'-10"	12	14	12	9	4	7.5	5	8.0	4	12.5	4	12.5	4	7.0	5	8.5	4	6.5	5	11.5	0	5	11.0	4	14.0	0.47	0.92	0.37	0.39	0.46	0.29	0.37	0.40	0.28	0.29	83	81	117	129

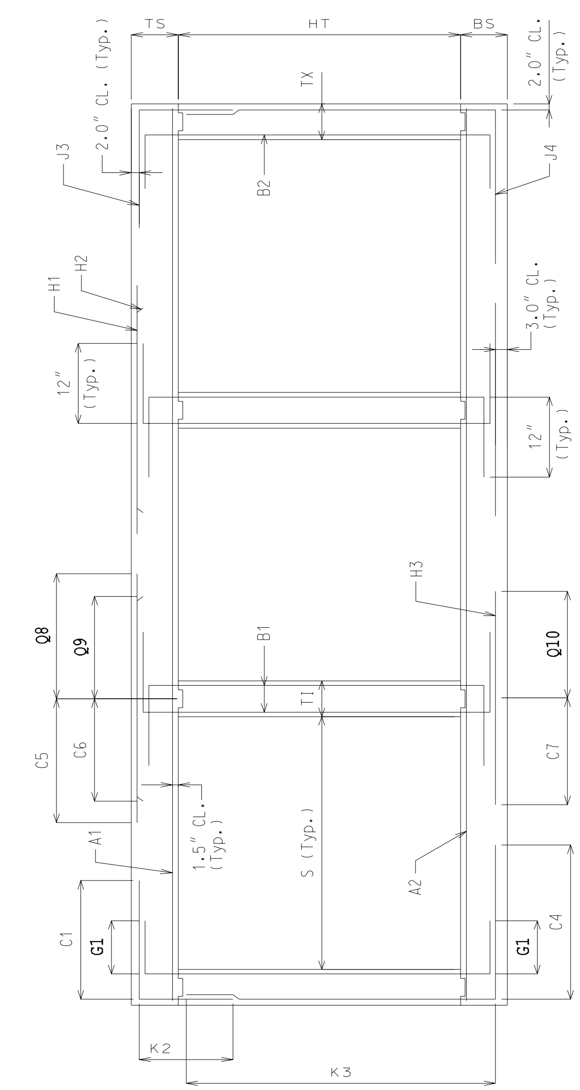

SECTION THRU BOX

NOTE: IF DESIGN FILL FALLS BETWEEN TABULATED FILLS, USE THE ADJACENT TABULATED FILL WHICH YIELDS THE GREATER MEMBER THICKNESS. IF THE MEMBER THICKNESSES ARE EQUAL, USE THE ADJACENT TABULATED FILL WHICH YIELDS THE GREATER AREA OF REINFORCEMENT.

SPECIAL DESIGNS ARE REQUIRED WHEN THE DESIGN FILL IS OUTSIDE THE RANGE OF TABULATED FILLS.

ALL DIMENSIONS ARE IN inch UNLESS OTHERWISE SPECIFIED.

COEFFICIENTS: DIMENSIONS MARKED WITH C# OR K# ARE THE PRODUCT OF THE COEFFICIENT AND ITS ASSOCIATED MULTIPLIER.

DESIGN FILL HEIGHT GIVEN IN THE TABLES IS THE HEIGHT FROM THE TOP OF THE EARTH FILL OR ROADWAY TO THE TOP OF THE TOP SLAB.

ALL CULVERTS MEET STRENGTH REQUIREMENTS FOR MILITARY 24 kips TANDEM AXLE LOADING.

MISSOURI HIGHWAY AND TRANSPORTATION COMMISSION

CONCRETE TRIPLE BOX CULVERT

MEMBER SIZES AND REINFORCEMENT

(HS20 & HS20 MOD. LOADING)

DATE:

EFFECTIVE: 04-01-2002

703.85B

Span (S) = 7 ft — HT (ft) = 4 or 5 or 6

Loading	DESIGN FILL (ft-in)	TS Thick	BS Thick.	TX Thick	TI Thick.	TOP SLAB BARS A1 Size	A1 Bars c to c	J3 Size	J3 Bars c to c	H1 Size	H1 Bars c to c	H2 Size	H2 Bars c to c	BOTTOM SLAB BARS A2 Size	A2 Bars c to c	J4 Size	J4 Bars c to c	H3 Size	H3 Bars c to c	WALL BARS B1 Size	B1 Bars c to c	B2 Bars G1	B2 Size	B2 c to c	F Size	F Bars c to c	COEFFICIENTS (see note) J4 C4	J4 K3	H3 C7	H3 Q10	J3 C1	J3 K2	H1 C5	H1 Q8	H2 C6	H2 Q9	"C" Multiplier S = 7 ft (in)	"Q" Multiplier S = 7 ft (in)	"K" Multiplier HT = 4 ft (in)	HT = 5 ft (in)	HT = 6 ft (in)
HS20	0'-8"	12	13	8	8	5	9.0	4	9.5	4	12.5	4	12.5	4	7.5	5	6.0	4	6.0	5	9.0	16	5	7.0	4	14.0	0.45	0.89	0.63	0.60	0.46	0.44	0.84	0.60	0.40	0.60	92	92	68	80	92
	2'-7"	8	9	8	8	5	9.0	4	7.0	5	14.0	5	14.0	4	7.5	5	7.0	6	7.0	5	6.5	16	5	11.5	4	14.0	0.44	0.92	0.53	0.62	0.54	0.44	0.51	0.62	0.31	0.24	92	92	60	72	84
	4'-3"	8	8	8	8	4	9.5	4	9.0	4	14.5	4	14.5	4	9.0	4	7.0	5	7.0	5	11.5	16	5	11.5	4	14.0	0.38	0.92	0.44	0.47	0.42	0.44	0.44	0.60	0.29	0.27	92	92	59	71	83
	5'-11"	8	8	8	8	4	10.0	4	9.5	4	15.0	4	15.0	4	8.5	4	7.5	5	7.0	5	11.5	16	5	11.5	4	14.0	0.35	0.92	0.41	0.43	0.37	0.44	0.41	0.47	0.28	0.27	92	92	59	71	83
	7'-6"	8	9	8	8	4	9.5	4	10.5	4	14.5	4	14.5	4	9.0	4	9.5	5	9.0	5	11.5	16	5	11.5	4	14.0	0.34	0.92	0.39	0.42	0.33	0.43	0.39	0.42	0.27	0.27	92	92	60	72	84
HS20 MOD	0'-7"	13	13	8	8	5	8.0	4	8.5	5	16.5	5	16.5	4	6.5	6	7.0	5	8.5	5	7.0	16	6	7.5	4	14.0	0.49	0.88	0.63	0.62	0.46	0.45	0.84	0.62	0.43	0.62	92	92	69	81	93
	2'-5"	10	10	8	8	5	9.0	4	6.5	5	15.0	5	15.0	4	8.0	5	7.0	5	6.0	5	7.0	16	5	11.5	4	14.0	0.43	0.90	0.54	0.62	0.55	0.44	0.84	0.62	0.32	0.29	92	92	63	75	87
	4'-2"	9	9	8	8	4	9.0	4	9.0	4	12.5	4	12.5	4	9.0	4	7.5	5	7.0	5	10.0	16	5	11.5	4	14.0	0.38	0.91	0.46	0.49	0.43	0.43	0.45	0.60	0.29	0.28	92	92	61	73	85
	5'-10"	9	9	8	8	4	10.0	4	9.0	4	16.5	4	16.5	4	9.0	4	9.0	5	8.5	5	11.5	16	5	11.5	4	14.0	0.35	0.91	0.42	0.45	0.37	0.44	0.42	0.53	0.28	0.29	92	92	61	73	85
	7'-5"	9	9	8	8	4	10.0	4	9.5	4	16.5	4	16.5	4	8.5	4	9.0	5	8.5	5	11.5	16	5	11.5	4	14.0	0.34	0.91	0.39	0.43	0.33	0.44	0.40	0.46	0.27	0.28	92	92	61	73	85
HS20 MOD or HS20	9'-2"	8	9	8	8	4	8.5	4	9.0	4	14.0	4	14.0	4	8.0	4	10.5	5	8.0	5	11.5	0	5	11.5	4	14.0	0.32	0.92	0.38	0.42	0.32	0.43	0.37	0.39	0.26	0.24	92	92	60	72	84
	10'-10"	8	10	8	8	4	7.5	4	8.5	4	12.5	4	12.5	4	8.5	4	10.5	5	9.0	5	11.5	0	5	11.5	4	14.0	0.31	0.92	0.37	0.41	0.32	0.42	0.37	0.39	0.26	0.24	92	92	61	73	85
	12'-5"	8	10	8	8	4	7.0	4	7.5	5	17.0	5	17.0	4	7.5	4	9.0	5	8.5	5	11.5	0	5	11.5	4	14.0	0.30	0.92	0.37	0.40	0.32	0.42	0.38	0.39	0.27	0.25	92	92	61	73	85
	14'-0"	9	11	8	8	4	7.5	4	8.0	4	12.0	4	12.0	4	7.5	4	9.0	4	6.0	5	11.5	0	5	11.5	4	14.0	0.30	0.91	0.36	0.40	0.31	0.42	0.37	0.39	0.26	0.25	92	92	63	75	87
	15'-8"	9	11	8	8	4	7.0	4	7.0	5	17.0	5	17.0	4	7.0	4	9.0	5	9.0	5	11.5	0	5	11.5	4	14.0	0.29	0.91	0.36	0.40	0.30	0.42	0.37	0.39	0.27	0.26	92	92	63	75	87
	17'-3"	10	12	8	8	4	7.0	4	7.0	5	18.5	5	18.5	4	7.0	4	9.0	4	6.0	5	11.5	0	5	11.5	4	14.0	0.29	0.90	0.35	0.40	0.30	0.43	0.37	0.39	0.27	0.26	92	92	65	77	89
	18'-10"	10	12	8	8	4	6.5	4	7.0	5	16.5	5	16.5	4	6.5	4	8.0	5	9.0	5	11.5	0	5	11.5	4	14.0	0.29	0.90	0.35	0.40	0.30	0.43	0.37	0.40	0.27	0.27	92	92	65	77	89
	20'-5"	11	13	8	8	4	6.5	4	7.0	5	18.0	5	18.0	4	7.0	4	8.5	5	9.0	5	11.5	0	5	11.5	4	14.0	0.28	0.90	0.35	0.40	0.29	0.43	0.37	0.40	0.27	0.27	92	92	67	79	91
	22'-1"	11	13	8	8	4	6.0	4	6.5	5	16.5	5	16.5	4	6.5	4	7.5	5	8.5	5	11.5	0	5	11.5	4	14.0	0.28	0.90	0.35	0.40	0.29	0.43	0.36	0.40	0.27	0.27	92	92	67	79	91
	23'-7"	12	13	8	8	4	6.5	4	7.0	5	18.5	5	18.5	4	6.0	4	7.0	5	8.5	5	11.5	0	5	11.5	4	14.0	0.28	0.89	0.35	0.40	0.28	0.44	0.36	0.40	0.26	0.27	92	92	68	80	92
	25'-3"	12	14	8	8	4	6.0	4	6.5	5	16.5	5	16.5	4	6.0	4	7.0	5	9.0	5	11.5	0	5	11.5	4	14.0	0.28	0.89	0.34	0.39	0.29	0.43	0.36	0.40	0.26	0.27	92	92	69	81	93
	26'-10"	13	14	8	8	4	6.0	4	6.5	5	18.0	5	18.0	5	9.0	4	7.0	5	8.5	5	11.5	0	5	11.5	4	14.0	0.28	0.88	0.35	0.40	0.28	0.44	0.35	0.40	0.26	0.28	92	92	70	82	94
	28'-5"	13	15	8	8	4	6.0	4	6.0	5	16.5	5	16.5	4	6.0	4	7.0	5	9.0	5	11.5	0	5	11.5	4	14.0	0.28	0.88	0.34	0.40	0.28	0.43	0.36	0.40	0.26	0.27	92	92	71	83	95
	30'-1"	13	15	9	8	5	9.0	4	6.5	5	15.5	5	15.5	5	9.0	4	7.5	5	8.0	5	11.5	0	5	11.5	4	14.0	0.28	0.88	0.34	0.40	0.29	0.43	0.36	0.40	0.26	0.27	93	92	71	83	95
	31'-8"	14	16	9	8	5	9.0	4	7.0	5	16.5	5	16.5	5	9.0	4	7.5	5	8.5	5	11.5	0	5	11.5	4	14.0	0.28	0.87	0.34	0.40	0.29	0.44	0.35	0.40	0.26	0.28	93	92	73	85	97

SPAN (S) = 7 ft — HT (ft) = 7 or 8

Loading	DESIGN FILL (ft-in)	TS Thick	BS Thick.	TX Thick	TI Thick.	TOP SLAB BARS A1 Size	A1 Bars c to c	J3 Size	J3 Bars c to c	H1 Size	H1 Bars c to c	H2 Size	H2 Bars c to c	BOTTOM SLAB BARS A2 Size	A2 Bars c to c	J4 Size	J4 Bars c to c	H3 Size	H3 Bars c to c	WALL BARS B1 Size	B1 Bars c to c	B2 Bars G1	B2 Size	B2 c to c	F Size	F Bars c to c	COEFFICIENTS (see note) J4 C4	J4 K3	H3 C7	H3 Q10	J3 C1	J3 K2	H1 C5	H1 Q8	H2 C6	H2 Q9	"C" Multiplier S = 7 ft (in)	"Q" Multiplier S = 7 ft (in)	"K" Multiplier HT = 7 ft (in)	HT = 8 ft (in)
HS20	0'-8"	12	13	8	8	5	9.0	4	8.0	4	12.5	4	12.5	4	6.5	6	8.0	4	6.0	5	11.0	16	5	7.0	4	14.0	0.69	0.91	0.64	0.60	0.46	0.29	0.84	0.60	0.42	0.60	92	92	104	116
	2'-7"	8	9	8	8	5	9.0	4	6.5	5	14.5	5	14.5	4	7.5	5	7.0	6	8.5	5	7.0	16	5	11.5	4	14.0	0.46	0.94	0.57	0.65	0.46	0.27	0.84	0.62	0.31	0.24	92	92	96	108
	4'-3"	8	8	8	8	4	9.0	4	7.5	4	14.5	4	14.5	4	8.5	5	9.0	5	6.5	5	11.5	16	5	11.5	4	14.0	0.43	0.94	0.45	0.47	0.49	0.27	0.44	0.60	0.29	0.28	92	92	95	107
	5'-11"	8	9	8	8	4	9.5	4	8.0	4	15.0	4	15.0	4	9.0	4	7.0	5	9.0	5	11.5	16	5	11.5	4	14.0	0.40	0.94	0.43	0.44	0.43	0.27	0.41	0.49	0.28	0.28	92	92	96	108
	7'-6"	8	9	8	8	4	9.5	4	7.5	4	14.5	4	14.5	4	8.5	4	7.0	5	9.0	5	11.5	16	5	11.5	4	14.0	0.39	0.94	0.40	0.42	0.38	0.27	0.40	0.43	0.27	0.27	92	92	96	108
HS20 MOD	0'-8"	12	13	8	8	5	7.0	4	7.0	5	15.0	5	15.0	5	8.5	6	7.0	5	7.5	5	8.5	16	6	8.0	4	14.0	0.69	0.91	0.64	0.62	0.46	0.29	0.84	0.62	0.43	0.62	92	92	104	116
	2'-6"	9	9	8	8	5	8.0	5	8.5	5	13.5	5	13.5	4	7.0	5	6.0	6	7.0	5	6.5	16	5	11.5	4	14.0	0.46	0.93	0.57	0.65	0.47	0.32	0.84	0.62	0.32	0.28	92	92	97	109
	4'-3"	8	9	8	8	4	8.0	4	7.0	4	12.5	4	12.5	4	8.5	4	6.5	5	7.0	5	11.5	16	5	11.5	4	14.0	0.43	0.94	0.48	0.50	0.50	0.27	0.45	0.60	0.29	0.27	92	92	96	108
	5'-11"	8	9	8	8	4	9.0	4	7.0	4	13.5	4	13.5	4	8.5	4	7.0	5	8.0	5	11.5	16	5	11.5	4	14.0	0.40	0.94	0.44	0.46	0.43	0.27	0.42	0.52	0.28	0.28	92	92	96	108
	7'-6"	8	9	8	8	4	9.0	4	7.0	4	14.0	4	14.0	4	8.0	4	7.0	5	8.0	5	11.5	16	5	11.5	4	14.0	0.39	0.94	0.40	0.43	0.38	0.27	0.40	0.45	0.27	0.27	92	92	96	108
HS20 MOD or HS20	9'-2"	8	9	8	8	4	8.0	4	7.0	4	14.0	4	14.0	4	7.5	4	7.0	5	7.5	5	11.5	0	5	11.5	4	14.0	0.37	0.94	0.39	0.42	0.37	0.27	0.37	0.40	0.26	0.24	92	92	96	108
	10'-10"	8	10	8	8	4	7.5	4	6.5	4	12.5	4	12.5	4	8.0	4	7.0	5	9.0	5	11.5	0	5	11.5	4	14.0	0.36	0.94	0.38	0.41	0.36	0.27	0.37	0.39	0.26	0.25	92	92	97	109
	12'-5"	8	10	8	8	4	7.0	4	6.0	5	17.0	5	17.0	4	7.5	4	6.5	5	8.5	5	11.5	0	5	11.5	4	14.0	0.36	0.94	0.38	0.40	0.36	0.27	0.37	0.39	0.27	0.25	92	92	97	109
	14'-0"	9	11	8	8	4	7.5	5	9.0	4	12.0	4	12.0	4	7.5	4	6.0	4	6.0	5	11.5	0	5	11.5	4	14.0	0.35	0.93	0.37	0.40	0.36	0.28	0.36	0.39	0.26	0.25	92	92	99	111
	15'-8"	9	11	8	8	4	7.0	5	8.5	5	17.0	5	17.0	4	7.0	5	9.0	5	9.0	5	11.5	0	5	11.5	4	14.0	0.36	0.93	0.37	0.40	0.36	0.28	0.37	0.40	0.27	0.26	92	92	99	111
	17'-3"	10	12	8	8	4	7.0	5	7.5	4	12.0	4	12.0	4	7.0	5	8.5	4	6.0	5	11.5	0	5	11.5	4	14.0	0.35	0.93	0.36	0.39	0.36	0.29	0.36	0.39	0.26	0.26	92	92	101	113
	18'-10"	10	12	9	8	4	6.5	5	9.0	5	17.0	5	17.0	4	7.0	4	6.0	5	8.5	5	11.5	0	5	11.5	4	14.0	0.35	0.93	0.36	0.40	0.36	0.32	0.37	0.40	0.27	0.27	93	92	101	113
	20'-5"	11	13	9	8	4	7.0	5	8.5	5	18.0	5	18.0	4	7.0	5	9.0	5	9.0	5	11.5	0	5	11.5	4	14.0	0.36	0.92	0.36	0.40	0.36	0.32	0.36	0.40	0.26	0.27	93	92	103	115
	22'-1"	11	13	9	8	4	6.5	5	8.0	5	17.0	5	17.0	4	6.5	5	8.5	5	8.5	5	11.5	0	5	11.5	4	14.0	0.35	0.92	0.36	0.40	0.36	0.32	0.36	0.40	0.26	0.27	93	92	103	115
	23'-7"	12	13	10	8	4	7.0	4	6.0	4	12.0	4	12.0	4	6.5	4	6.0	5	8.5	5	11.5	0	5	11.5	4	14.0	0.35	0.91	0.35	0.39	0.35	0.29	0.35	0.39	0.26	0.27	93	92	104	116
	25'-3"	12	14	10	8	4	6.5	5	8.5	5	17.0	5	17.0	4	6.5	5	9.0	5	9.0	5	11.5	0	5	11.5	4	14.0	0.36	0.91	0.35	0.39	0.36	0.29	0.36	0.40	0.26	0.27	93	92	105	117
	26'-10"	13	14	10	8	4	6.5	5	8.5	5	18.5	5	18.5	4	6.0	5	8.5	5	8.5	5	11.5	0	5	11.5	4	14.0	0.36	0.90	0.35	0.39	0.36	0.30	0.35	0.40	0.26	0.28	93	92	106	118
	28'-5"	13	15	10	8	4	6.5	5	7.5	5	17.0	5	17.0	4	6.0	5	8.5	5	9.0	5	11.5	0	5	11.5	4	14.0	0.36	0.90	0.35	0.39	0.36	0.33	0.36	0.40	0.26	0.27	93	92	107	119
	30'-1"	13	15	11	8	5	9.5	5	8.5	5	16.0	5	16.0	5	9.0	5	9.0	5	8.0	5	11.5	0	5	11.5	4	14.0	0.36	0.90	0.35	0.39	0.36	0.30	0.36	0.40	0.26	0.27	94	92	107	119
	31'-8"	14	16	11	8	4	6.0	5	8.5	5	16.5	5	16.5	5	9.5	5	9.0	5	8.5	5	11.5	0	5	11.5	4	14.0	0.36	0.90	0.35	0.39	0.36	0.30	0.35	0.40	0.26	0.28	94	92	109	121

SPAN (S) = 7 ft — HT (ft) = 9 or 10

Loading	DESIGN FILL (ft-in)	TS Thick	BS Thick.	TX Thick	TI Thick.	TOP SLAB BARS A1 Size	A1 Bars c to c	J3 Size	J3 Bars c to c	H1 Size	H1 Bars c to c	H2 Size	H2 Bars c to c	BOTTOM SLAB BARS A2 Size	A2 Bars c to c	J4 Size	J4 Bars c to c	H3 Size	H3 Bars c to c	WALL BARS B1 Size	B1 Bars c to c	B2 Bars G1	B2 Size	B2 c to c	F Size	F Bars c to c	COEFFICIENTS (see note) J4 C4	J4 K3	H3 C7	H3 Q10	J3 C1	J3 K2	H1 C5	H1 Q8	H2 C6	H2 Q9	"C" Multiplier S = 7 ft (in)	"Q" Multiplier S = 7 ft (in)	"K" Multiplier HT = 9 ft (in)	HT = 10 ft (in)
HS20	0'-9"	11	12	9	9	5	7.5	4	7.0	5	17.5	5	17.5	4	7.0	6	7.5	5	8.5	5	10.5	16	5	7.5	4	14.0	0.70	0.93	0.64	0.62	0.46	0.23	0.84	0.62	0.40	0.62	93	93	126	138
	2'-7"	8	9	9	9	5	9.0	4	6.0	5	14.5	5	14.5	4	7.0	5	6.0	6	8.5	5	8.5	16	5	11.5	4	14.0	0.55	0.95	0.60	0.57	0.46	0.22	0.84	0.62	0.31	0.24	93	93	120	132
	4'-3"	8	8	9	9	4	9.0	4	7.0	4	14.5	4	14.5	4	8.0	5	6.5	5	6.5	5	11.5	16	5	11.5	4	14.0	0.49	0.95	0.45	0.46	0.53	0.22	0.84	0.60	0.29	0.28	93	93	119	131
	5'-11"	8	9	9	9	4	10.0	4	7.0	4	15.5	4	15.5	4	9.0	5	8.5	5	9.0	5	11.5	16	5	11.5	4	14.0	0.48	0.95	0.43	0.44	0.51	0.22	0.42	0.47	0.28	0.28	93	93	120	132
	7'-6"	8	9	9	9	4	9.5	4	6.5	4	15.0	4	15.0	4	8.5	5	8.0	5	9.0	5	11.5	16	5	11.5	4	14.0	0.46	0.95	0.40	0.42	0.46	0.22	0.40	0.42	0.27	0.27	93	93	120	132
HS20 MOD	0'-8"	12	13	9	9	5	7.0	4	6.5	5	15.5	5	15.5	5	9.0	6	7.0	5	7.5	5	9.0	16	5	6.5	4	14.0	0.70	0.93	0.64	0.62	0.46	0.23	0.84	0.62	0.42	0.62	93	93	128	140
	2'-6"	9	10	9	9	5	8.0	5	8.5	5	14.0	5	14.0	4	7.0	5	6.5	6	8.0	5	8.5	16	5	11.5	4	14.0	0.57	0.95	0.63	0.65	0.47	0.23	0.84	0.62	0.32	0.26	93	93	122	134
	4'-3"	8	9	9	9	4	8.0	4	6.5	4	12.5	4	12.5	4	8.0	5	7.5	5	7.0	5	11.5	16	5	11.5	4	14.0	0.51	0.95	0.50	0.49	0.54	0.22	0.84	0.60	0.29	0.27	93	93	120	132
	5'-11"	8	9	9	9	4	9.0	4	6.5	4	14.0	4	14.0	4	8.0	5	7.5	5	7.5	5	11.5	16	5	11.5	4	14.0	0.48	0.95	0.44	0.45	0.51	0.22	0.42	0.50	0.28	0.28	93	93	120	132
	7'-6"	8	9	9	9	4	9.0	4	6.5	4	14.0	4	14.0	4	7.5	5	7.5	5	8.0	5	11.5	16	5	11.5	4	14.0	0.46	0.95	0.41	0.42	0.46	0.22	0.40	0.44	0.28	0.27	93	93	120	132
HS20 MOD or HS20	9'-2"	8	10	9	9	4	8.5	4	6.0	4	14.0	4	14.0	4	7.5	4	6.0	5	7.5	5	11.5	0	5	11.5	4	14.0	0.45	0.95	0.40	0.41	0.45	0.22	0.37	0.39	0.27	0.24	93	93	121	133
	10'-10"	8	10	9	9	4	8.0	5	9.0	4	12.5	4	12.5	4	8.0	5	8.5	5	9.0	5	11.5	0	5	11.5	4	14.0	0.45	0.95	0.39	0.40	0.44	0.23	0.37	0.38	0.26	0.25	93	93	121	133
	12'-5"	8	10	9	9	4	7.0	5	8.0	5	18.0	5	18.0	4	7.5	5	8.0	5	8.5	5	11.5	0	5	11.5	4	14.0	0.45	0.95	0.39	0.40	0.44	0.23	0.37	0.39	0.27	0.25	93	93	121	133
	14'-0"	9	11	9	9	4	7.5	5	7.0	4	12.5	4	12.5	4	7.5	5	7.0	4	6.0	5	11.5	0	5	11.0	4	14.0	0.45	0.95	0.38	0.39	0.44	0.26	0.37	0.38	0.26	0.26	93	93	123	135
	15'-8"	9	11	9	9	4	7.0	5	7.0	5	18.0	5	18.0	4	7.0	5	7.0	5	9.0	5	11.5	0	5	10.5	4	14.0	0.44	0.95	0.38	0.39	0.43	0.26	0.37	0.39	0.27	0.26	93	93	123	135
	17'-3"	10	12	10	9	4	7.0	5	7.5	4	12.5	4	12.5	4	7.0	5	7.5	4	6.0	5	11.5	0	5	11.0	4	14.0	0.44	0.94	0.37	0.39	0.43	0.26	0.36	0.39	0.26	0.26	94	93	125	137
	18'-10"	10	12	10	9	4	7.0	5	7.0	5	17.5	5	17.5	4	7.0	5	7.0	5	9.0	5	11.5	0	5	11.0	4	14.0	0.43	0.94	0.37	0.39	0.43	0.26	0.37	0.39	0.27	0.27	94	93	125	137
	20'-5"	11	13	11	9	4	7.0	5	7.5	4	12.0	4	12.0	4	7.0	5	7.5	5	9.0	5	11.5	0	5	11.0	4	14.0	0.43	0.93	0.37	0.39	0.43	0.26	0.36	0.39	0.26	0.27	94	93	127	139
	22'-1"	11	13	11	9	4	7.0	5	7.0	5	17.5	5	17.5	4	7.0	5	7.0	5	8.5	5	11.5	0	5	11.0	4	14.0	0.43	0.93	0.36	0.39	0.43	0.26	0.36	0.39	0.27	0.27	94	93	127	139
	23'-7"	12	13	11	9	4	7.0	5	7.0	4	12.5	4	12.5	4	6.5	5	7.0	5	8.5	5	11.5	0	5	10.0	4	14.0	0.43	0.93	0.36	0.38	0.43	0.27	0.35	0.38	0.26	0.27	94	93	128	140
	25'-3"	12	14	12	9	4	7.0	5	7.5	5	18.0	5	18.0	4	6.5	5	7.5	5	9.0	5	11.5	0	5	11.0	4	14.0	0.43	0.93	0.35	0.38	0.43	0.27	0.36	0.39	0.26	0.27	95	93	129	141
	26'-10"	13	14	12	9	4	7.0	5	7.0	4	12.0	4	12.0	4	6.5	5	7.0	5	8.5	5	11.5	0	5	10.5	4	14.0	0.43	0.92	0.35	0.38	0.43	0.27	0.35	0.38	0.26	0.27	95	93	130	142
	28'-5"	13	15	12	9	4	7.0	5	7.0	5	17.5	5	17.5	4	6.5	5	7.0	5	9.0	5	11.5	0	5	9.5	4	14.0	0.43	0.92	0.35	0.38	0.43	0.27	0.36	0.39	0.26	0.27	95	93	131	143
	30'-1"	13	15	13	9	5	10.0	5	7.0	5	16.5	5	16.5	4	6.0	5	7.0	5	8.0	5	11.5	0	5	10.5	4	14.0	0.43	0.92	0.35	0.38	0.43	0.27	0.35	0.39	0.26	0.27	95	93	131	143
	31'-8"	14	16	13	9	4	6.5	5	7.0	5	17.5	5	17.5	4	6.0	5	7.0	5	9.0	5	11.5	0	5	10.0	4	14.0	0.43	0.92	0.35	0.38	0.43	0.27	0.35	0.39	0.26	0.28	95	93	133	145

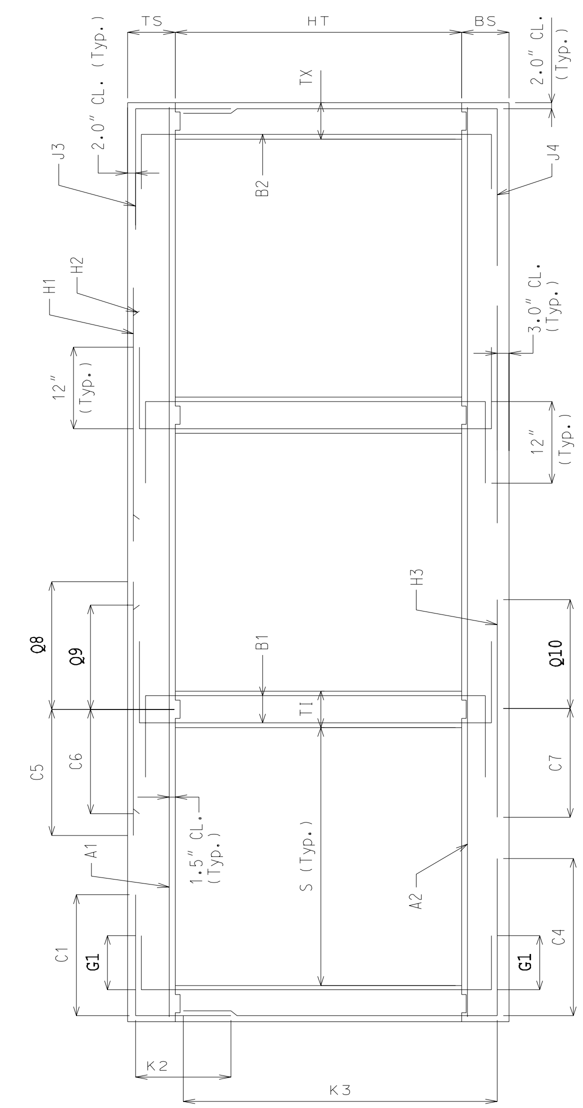

SECTION THRU BOX

NOTE: IF DESIGN FILL FALLS BETWEEN TABULATED FILLS, USE THE ADJACENT TABULATED FILL WHICH YIELDS THE GREATER MEMBER THICKNESS. IF THE MEMBER THICKNESSES ARE EQUAL, USE THE ADJACENT TABULATED FILL WHICH YIELDS THE GREATER AREA OF REINFORCEMENT.

SPECIAL DESIGNS ARE REQUIRED WHEN THE DESIGN FILL IS OUTSIDE THE RANGE OF TABULATED FILLS.

ALL DIMENSIONS ARE IN inch UNLESS OTHERWISE SPECIFIED.

COEFFICIENTS: DIMENSIONS MARKED WITH C# OR K# ARE THE PRODUCT OF THE COEFFICIENT AND ITS ASSOCIATED MULTIPLIER.

DESIGN FILL HEIGHT GIVEN IN THE TABLES IS THE HEIGHT FROM THE TOP OF THE EARTH FILL OR ROADWAY TO THE TOP OF THE TOP SLAB.

ALL CULVERTS MEET STRENGTH REQUIREMENTS FOR MILITARY 24 kips TANDEM AXLE LOADING.

MISSOURI HIGHWAY AND TRANSPORTATION COMMISSION

CONCRETE TRIPLE BOX CULVERT

MEMBER SIZES AND REINFORCEMENT

(HS20 & HS20 MOD. LOADING)

DATE: | EFFECTIVE: 04-01-2002 | **703.85B**

Span (S) = 8 ft; HT (ft) = 5 or 6 or 7

Loading	DESIGN FILL (ft-in)	TS Thick	BS Thick.	TX Thick	TI Thick.	TOP SLAB BARS A1 Size	A1 Bars c to c	J3 Size	J3 Bars c to c	H1 Size	H1 Bars c to c	H2 Size	H2 Bars c to c	BOTTOM SLAB BARS A2 Size	A2 Bars c to c	J4 Size	J4 Bars c to c	H3 Size	H3 Bars c to c	WALL BARS B1 Size	B1 Bars c to c	B2 Bars G1	B2 Size	B2 c to c	F Size	F Bars c to c	COEFFICIENTS (see note) J4 C4	J4 K3	H3 C7	H3 Q10	J3 C1	J3 K2	H1 C5	H1 Q8	H2 C6	H2 Q9	"C" Multiplier S = 8 ft (in)	"Q" Multiplier S = 8 ft (in)	"K" Multiplier HT = 5 ft (in)	HT = 6 ft (in)	HT = 7 ft (in)
HS20	0'-8"	12	13	8	8	5	8.0	4	8.0	5	17.0	5	17.0	4	7.0	6	7.0	5	8.0	5	7.5	16	5	6.0	4	14.0	0.46	0.90	0.62	0.61	0.44	0.37	0.83	0.61	0.38	0.61	104	104	80	92	104
	2'-4"	11	12	8	8	4	6.5	4	7.0	5	17.0	5	17.0	4	8.5	5	7.0	5	7.0	5	10.0	16	5	11.5	4	14.0	0.39	0.91	0.54	0.61	0.54	0.37	0.83	0.61	0.30	0.30	104	104	78	90	102
	4'-3"	8	9	8	8	4	7.0	4	7.0	5	16.5	5	16.5	4	7.5	5	9.0	6	7.0	5	10.0	16	5	11.5	4	14.0	0.36	0.93	0.45	0.47	0.40	0.36	0.42	0.61	0.27	0.24	104	104	72	84	96
	5'-11"	8	9	8	8	4	7.5	4	7.0	5	17.5	5	17.5	4	7.0	4	7.0	5	6.5	5	11.5	16	5	11.5	4	14.0	0.34	0.93	0.40	0.43	0.35	0.36	0.40	0.46	0.26	0.25	104	104	72	84	96
	7'-6"	8	9	8	8	4	7.0	4	7.0	5	16.5	5	16.5	4	7.0	4	7.0	5	6.5	5	11.5	16	5	11.5	4	14.0	0.32	0.93	0.38	0.41	0.33	0.36	0.38	0.41	0.26	0.25	104	104	72	84	96
HS20 MOD	0'-6"	14	15	8	8	5	7.5	4	7.5	5	15.5	5	15.5	5	8.5	6	7.0	5	7.5	5	7.5	16	6	6.0	4	14.0	0.67	0.88	0.63	0.61	0.44	0.38	0.83	0.61	0.42	0.61	104	104	84	96	108
	2'-5"	10	11	8	8	5	7.0	5	8.5	5	12.5	5	12.5	4	7.0	6	8.0	6	7.5	5	7.0	16	5	11.5	4	14.0	0.43	0.91	0.57	0.63	0.45	0.42	0.83	0.61	0.30	0.26	104	104	76	88	100
	4'-3"	8	9	8	8	4	6.5	4	6.5	5	14.5	5	14.5	4	7.0	5	9.0	6	7.5	5	8.0	16	5	11.5	4	14.0	0.37	0.93	0.48	0.51	0.42	0.36	0.43	0.61	0.27	0.24	104	104	72	84	96
	5'-11"	8	9	8	8	4	7.0	4	6.5	5	16.0	5	16.0	4	7.0	4	6.5	5	6.0	5	11.0	16	5	11.5	4	14.0	0.34	0.93	0.41	0.44	0.36	0.36	0.41	0.49	0.26	0.25	104	104	72	84	96
	7'-6"	8	10	8	8	4	7.0	4	7.0	5	15.5	5	15.5	4	7.0	4	7.0	5	7.0	5	11.5	16	5	11.5	4	14.0	0.32	0.93	0.38	0.42	0.33	0.35	0.39	0.42	0.26	0.25	104	104	73	85	97
HS20 MOD or HS20	9'-2"	8	10	8	8	4	6.5	4	6.5	5	15.5	5	15.5	4	7.0	4	8.0	5	7.0	5	11.5	0	5	11.5	4	14.0	0.30	0.93	0.37	0.41	0.31	0.35	0.37	0.38	0.25	0.23	104	104	73	85	97
	10'-9"	9	11	8	8	4	7.0	4	6.5	5	16.5	5	16.5	4	6.5	4	8.0	5	7.0	5	11.5	0	5	11.5	4	14.0	0.29	0.92	0.36	0.40	0.30	0.36	0.36	0.39	0.25	0.23	104	104	75	87	99
	12'-4"	9	11	8	8	4	6.0	4	6.0	5	15.0	5	15.0	4	6.5	4	7.0	5	7.0	5	11.5	0	5	11.5	4	14.0	0.29	0.92	0.35	0.39	0.29	0.36	0.36	0.38	0.25	0.24	104	104	75	87	99
	13'-11"	10	12	8	8	4	6.5	4	6.0	5	16.0	5	16.0	4	6.5	4	7.0	5	8.0	5	11.5	0	5	11.5	4	14.0	0.28	0.92	0.35	0.39	0.29	0.36	0.35	0.39	0.25	0.25	104	104	77	89	101
	15'-7"	10	12	8	8	5	9.0	5	9.0	5	14.5	5	14.5	4	6.0	4	6.5	5	7.0	5	11.5	0	5	11.5	4	14.0	0.28	0.92	0.35	0.39	0.29	0.36	0.35	0.39	0.25	0.25	104	104	77	89	101
	17'-2"	11	13	8	8	4	6.0	5	9.0	5	15.5	5	15.5	4	6.0	4	6.5	5	7.5	5	11.5	0	5	11.5	4	14.0	0.27	0.91	0.34	0.39	0.28	0.36	0.35	0.39	0.25	0.25	104	104	79	91	103
	18'-8"	12	13	8	8	4	6.0	5	9.0	5	16.5	5	16.5	5	9.0	4	6.0	5	7.0	5	11.5	0	5	11.5	4	14.0	0.27	0.90	0.34	0.39	0.28	0.37	0.34	0.39	0.25	0.25	104	104	80	92	104
	20'-4"	12	14	8	8	5	9.0	5	8.5	5	14.5	5	14.5	5	9.0	4	6.0	5	7.5	5	11.5	0	5	11.5	4	14.0	0.27	0.90	0.34	0.39	0.28	0.37	0.35	0.39	0.25	0.25	104	104	81	93	105
	21'-11"	13	14	8	8	5	9.0	5	8.5	5	15.5	5	15.5	5	8.5	5	9.0	5	7.0	5	11.5	0	5	11.5	4	14.0	0.27	0.89	0.34	0.39	0.27	0.38	0.34	0.39	0.24	0.26	104	104	82	94	106
	23'-6"	13	15	9	8	5	8.5	5	9.0	5	14.5	5	14.5	5	8.5	4	6.5	5	7.0	5	11.5	0	5	11.5	4	14.0	0.27	0.89	0.33	0.39	0.28	0.37	0.34	0.39	0.24	0.26	105	104	83	95	107
	25'-1"	14	15	9	8	5	8.5	5	9.0	5	15.0	5	15.0	5	8.0	4	6.0	5	7.0	5	11.5	0	5	11.5	4	14.0	0.27	0.88	0.34	0.39	0.28	0.38	0.34	0.39	0.24	0.26	105	104	84	96	108
	26'-9"	14	16	9	8	5	8.0	5	8.5	5	14.5	5	14.5	5	8.0	4	6.0	5	7.5	5	11.5	0	5	11.5	4	14.0	0.27	0.89	0.33	0.38	0.28	0.37	0.34	0.39	0.24	0.26	105	104	85	97	109
	28'-3"	15	16	9	8	5	8.5	5	9.0	5	15.0	5	15.0	5	7.5	5	9.0	5	7.0	5	11.5	0	5	11.5	4	14.0	0.27	0.88	0.33	0.38	0.33	0.38	0.39	0.44	0.29	0.31	105	104	86	98	110
	29'-11"	15	17	10	8	5	8.0	5	9.0	5	14.5	5	14.5	5	8.0	4	6.5	5	7.0	5	11.5	0	5	11.5	4	14.0	0.27	0.88	0.33	0.38	0.33	0.38	0.39	0.44	0.29	0.31	105	104	87	99	111
	31'-6"	16	17	10	8	5	8.0	4	6.0	5	14.5	5	14.5	5	7.5	4	6.0	5	7.0	5	11.5	0	5	11.5	4	14.0	0.28	0.87	0.33	0.38	0.30	0.38	0.39	0.44	0.29	0.31	105	104	88	100	112

SPAN (S) = 8 ft; HT (ft) = 8 or 9

Loading	DESIGN FILL (ft-in)	TS Thick	BS Thick.	TX Thick	TI Thick.	TOP SLAB BARS A1 Size	A1 Bars c to c	J3 Size	J3 Bars c to c	H1 Size	H1 Bars c to c	H2 Size	H2 Bars c to c	BOTTOM SLAB BARS A2 Size	A2 Bars c to c	J4 Size	J4 Bars c to c	H3 Size	H3 Bars c to c	WALL BARS B1 Size	B1 Bars c to c	B2 Bars G1	B2 Size	B2 c to c	F Size	F Bars c to c	COEFFICIENTS (see note) J4 C4	J4 K3	H3 C7	H3 Q10	J3 C1	J3 K2	H1 C5	H1 Q8	H2 C6	H2 Q9	"C" Multiplier S = 8 ft (in)	"Q" Multiplier S = 8 ft (in)	"K" Multiplier HT = 8 ft (in)	HT = 9 ft (in)
HS20	0'-8"	12	13	9	9	5	7.5	4	7.0	5	16.5	5	16.5	4	6.0	6	7.0	5	8.0	5	9.0	16	5	6.5	4	14.0	0.68	0.92	0.63	0.61	0.44	0.26	0.83	0.61	0.39	0.61	105	105	116	128
	2'-6"	9	9	9	9	5	8.0	5	8.5	5	13.0	5	13.0	4	7.0	6	8.0	6	7.0	5	6.5	16	5	11.5	4	14.0	0.46	0.94	0.53	0.55	0.45	0.29	0.83	0.61	0.30	0.26	105	105	109	121
	4'-3"	8	9	9	9	4	7.0	4	7.0	5	16.5	5	16.5	4	7.5	5	8.0	5	6.5	5	11.0	16	5	11.5	4	14.0	0.41	0.95	0.44	0.47	0.46	0.24	0.42	0.61	0.27	0.25	105	105	108	120
	5'-11"	8	9	9	9	4	7.5	5	8.0	5	17.5	5	17.5	4	7.0	5	6.0	5	6.5	5	11.5	16	5	9.5	4	14.0	0.45	0.96	0.42	0.42	0.49	0.21	0.40	0.46	0.26	0.25	105	105	108	120
	7'-6"	8	10	9	9	4	7.0	4	6.5	5	16.5	5	16.5	4	7.5	4	6.5	5	7.5	5	11.5	16	5	11.5	4	14.0	0.37	0.95	0.38	0.41	0.38	0.24	0.38	0.42	0.26	0.25	105	105	109	121
HS20 MOD	0'-8"	12	13	9	9	5	6.0	4	6.0	5	13.5	5	13.5	5	7.5	7	7.5	5	6.5	5	7.0	16	6	7.0	4	14.0	0.71	0.92	0.63	0.61	0.44	0.26	0.83	0.61	0.40	0.53	105	105	116	128
	2'-5"	10	10	9	9	5	7.0	5	7.5	5	12.5	5	12.5	4	6.0	6	7.0	6	6.5	5	7.0	16	5	11.0	4	14.0	0.47	0.93	0.55	0.63	0.45	0.29	0.83	0.61	0.30	0.28	105	105	111	123
	4'-3"	8	9	9	9	4	6.0	4	6.0	5	14.5	5	14.5	4	7.0	5	7.0	6	7.5	5	9.0	16	5	11.5	4	14.0	0.42	0.95	0.48	0.51	0.48	0.24	0.43	0.61	0.27	0.25	105	105	108	120
	5'-11"	8	10	9	9	4	7.0	4	6.0	5	16.0	5	16.0	5	10.5	5	9.0	6	8.5	5	11.5	16	5	11.5	4	14.0	0.39	0.95	0.44	0.47	0.42	0.24	0.41	0.50	0.27	0.26	105	105	109	121
	7'-6"	8	10	9	9	4	7.0	4	6.0	5	15.5	5	15.5	4	7.0	4	6.0	5	7.0	5	11.5	16	5	11.5	4	14.0	0.37	0.95	0.39	0.42	0.38	0.24	0.39	0.43	0.26	0.25	105	105	109	121
HS20 MOD or HS20	9'-2"	8	10	9	9	4	6.5	4	6.0	5	15.5	5	15.5	4	7.0	4	7.0	5	7.0	5	11.5	0	5	11.5	4	14.0	0.35	0.95	0.37	0.40	0.35	0.24	0.36	0.38	0.25	0.23	105	105	109	121
	10'-9"	9	11	9	9	4	7.0	5	9.0	5	17.0	5	17.0	4	7.0	4	6.5	5	7.5	5	11.5	0	5	11.5	4	14.0	0.35	0.94	0.36	0.40	0.35	0.28	0.36	0.39	0.25	0.24	105	105	111	123
	12'-4"	9	11	9	9	4	6.0	5	8.5	5	15.0	5	15.0	4	6.5	5	9.0	5	7.0	5	11.5	0	5	11.5	4	14.0	0.35	0.94	0.36	0.39	0.35	0.28	0.36	0.39	0.25	0.24	105	105	111	123
	13'-11"	10	12	9	9	4	6.5	5	8.0	5	16.0	5	16.0	4	6.5	5	8.5	5	8.0	5	11.5	0	5	11.5	4	14.0	0.34	0.93	0.35	0.39	0.34	0.29	0.35	0.39	0.25	0.25	105	105	113	125
	15'-7"	10	12	9	9	5	9.0	5	7.5	5	14.5	5	14.5	4	6.0	5	8.0	5	7.0	5	11.5	0	5	11.5	4	14.0	0.34	0.93	0.35	0.39	0.34	0.29	0.35	0.39	0.25	0.25	105	105	113	125
	17'-2"	11	13	9	9	4	6.0	5	7.0	5	15.5	5	15.5	4	6.0	5	7.5	5	7.5	5	11.5	0	5	11.5	4	14.0	0.34	0.93	0.35	0.39	0.34	0.29	0.35	0.39	0.25	0.25	105	105	115	127
	18'-8"	12	13	10	9	4	6.0	5	8.0	5	16.5	5	16.5	5	9.0	5	8.0	5	7.0	5	11.5	0	5	11.5	4	14.0	0.34	0.92	0.34	0.38	0.34	0.30	0.34	0.39	0.25	0.25	106	105	116	128
	20'-4"	12	14	10	9	5	9.0	5	7.5	5	15.0	5	15.0	5	9.0	5	7.5	5	7.5	5	11.5	0	5	11.5	4	14.0	0.34	0.92	0.34	0.38	0.34	0.29	0.35	0.39	0.25	0.25	106	105	117	129
	21'-11"	13	14	10	9	5	9.0	5	7.0	5	16.0	5	16.0	5	9.0	5	7.0	5	7.0	5	11.5	0	5	11.5	4	14.0	0.34	0.91	0.34	0.38	0.34	0.30	0.34	0.39	0.24	0.26	106	105	118	130
	23'-6"	13	15	10	9	5	9.0	5	7.0	5	14.5	5	14.5	5	9.0	5	7.0	5	7.0	5	11.5	0	5	11.5	4	14.0	0.33	0.91	0.34	0.38	0.34	0.30	0.34	0.39	0.25	0.26	106	105	119	131
	25'-1"	14	15	11	9	5	9.0	5	7.5	5	15.5	5	15.5	5	8.5	5	7.5	5	7.0	5	11.5	0	5	11.5	4	14.0	0.34	0.91	0.34	0.38	0.34	0.30	0.34	0.39	0.24	0.26	106	105	120	132
	26'-9"	14	16	11	9	5	9.0	5	7.0	5	14.5	5	14.5	5	8.5	5	7.5	5	7.5	5	11.5	0	5	11.5	4	14.0	0.34	0.91	0.33	0.37	0.34	0.30	0.34	0.38	0.24	0.26	106	105	121	133
	28'-3"	15	16	11	9	5	9.0	5	7.0	5	15.0	5	15.0	5	8.0	5	7.0	5	7.0	5	11.5	0	5	11.5	4	14.0	0.34	0.90	0.33	0.37	0.39	0.31	0.39	0.43	0.29	0.31	106	105	122	134
	29'-11"	15	17	12	9	5	8.5	5	7.5	5	14.5	5	14.5	5	8.5	5	7.5	5	7.0	5	11.5	0	5	11.5	4	14.0	0.34	0.90	0.33	0.37	0.39	0.30	0.39	0.43	0.29	0.31	107	105	123	135
	31'-6"	16	17	12	9	5	8.5	5	7.0	5	14.5	5	14.5	5	8.0	5	7.0	5	7.0	5	11.5	0	5	11.5	4	14.0	0.34	0.89	0.33	0.37	0.39	0.31	0.38	0.43	0.29	0.31	107	105	124	136

SPAN (S) = 8 ft; HT (ft) = 10 or 11

Loading	DESIGN FILL (ft-in)	TS Thick	BS Thick.	TX Thick	TI Thick.	TOP SLAB BARS A1 Size	A1 Bars c to c	J3 Size	J3 Bars c to c	H1 Size	H1 Bars c to c	H2 Size	H2 Bars c to c	BOTTOM SLAB BARS A2 Size	A2 Bars c to c	J4 Size	J4 Bars c to c	H3 Size	H3 Bars c to c	WALL BARS B1 Size	B1 Bars c to c	B2 Bars G1	B2 Size	B2 c to c	F Size	F Bars c to c	COEFFICIENTS (see note) J4 C4	J4 K3	H3 C7	H3 Q10	J3 C1	J3 K2	H1 C5	H1 Q8	H2 C6	H2 Q9	"C" Multiplier S = 8 ft (in)	"Q" Multiplier S = 8 ft (in)	"K" Multiplier HT = 10 ft (in)	HT = 11 ft (in)
HS20	0'-9"	11	12	9	9	5	7.0	5	9.0	5	15.0	5	15.0	4	6.0	6	6.5	5	7.0	5	9.0	16	5	7.0	4	14.0	0.68	0.94	0.63	0.61	0.45	0.22	0.83	0.61	0.37	0.23	105	105	138	150
	2'-6"	9	10	9	9	5	8.0	5	7.5	5	13.0	5	13.0	4	6.5	6	7.5	6	7.0	5	7.0	16	5	11.5	4	14.0	0.57	0.95	0.59	0.63	0.45	0.24	0.83	0.61	0.30	0.25	105	105	134	146
	4'-3"	8	9	9	9	4	7.0	5	8.5	5	16.5	5	16.5	4	7.0	5	6.0	5	6.0	5	11.5	16	5	10.0	4	14.0	0.48	0.96	0.46	0.46	0.55	0.21	0.43	0.61	0.27	0.24	105	105	132	144
	5'-11"	8	9	9	9	4	7.5	5	8.0	5	17.5	5	17.5	4	7.0	5	6.0	5	6.5	5	11.5	16	5	9.5	4	14.0	0.45	0.96	0.42	0.42	0.49	0.21	0.40	0.46	0.26	0.25	105	105	132	144
	7'-6"	8	10	9	9	4	7.0	5	7.5	5	16.5	5	16.5	4	7.0	5	7.0	5	7.5	5	11.5	16	5	11.5	4	14.0	0.45	0.96	0.40	0.40	0.44	0.21	0.39	0.41	0.26	0.25	105	105	133	145
HS20 MOD	0'-8"	12	13	9	9	5	6.0	5	8.0	5	13.5	5	13.5	5	7.5	7	7.5	5	6.5	5	8.5	16	6	8.0	4	14.0	0.72	0.93	0.63	0.61	0.45	0.25	0.83	0.61	0.40	0.44	105	105	140	152
	2'-5"	10	10	9	9	5	7.0	5	7.0	5	12.5	5	12.5	4	6.0	6	7.0	6	6.5	5	7.5	16	5	11.5	4	14.0	0.56	0.94	0.59	0.63	0.45	0.24	0.83	0.61	0.30	0.28	105	105	135	147
	4'-3"	8	9	9	9	4	6.0	5	7.5	5	14.5	5	14.5	4	6.5	6	8.0	6	7.5	5	10.0	16	5	10.0	4	14.0	0.51	0.96	0.50	0.50	0.52	0.23	0.83	0.61	0.28	0.24	105	105	132	144
	5'-11"	8	10	9	9	4	7.0	5	7.5	5	16.0	5	16.0	4	7.0	5	7.0	5	7.0	5	11.5	16	5	11.5	4	14.0	0.47	0.96	0.45	0.44	0.50	0.23	0.40	0.48	0.27	0.25	105	105	133	145
	7'-6"	8	10	9	9	4	7.0	5	7.5	5	16.0	5	16.0	4	7.0	5	7.0	5	7.0	5	11.5	16	5	11.5	4	14.0	0.45	0.96	0.41	0.41	0.44	0.23	0.39	0.42	0.26	0.25	105	105	133	145
HS20 MOD or HS20	9'-2"	8	10	9	9	4	6.5	5	7.0	5	15.5	5	15.5	4	7.0	5	7.0	5	7.0	5	11.5	0	5	11.0	4	14.0	0.44	0.96	0.39	0.40	0.43	0.23	0.36	0.38	0.25	0.23	105	105	133	145
	10'-9"	9	11	9	9	4	7.0	5	7.0	5	17.0	5	17.0	4	7.0	5	7.0	5	7.5	5	11.5	0	5	10.5	4	14.0	0.43	0.95	0.38	0.39	0.43	0.23	0.36	0.38	0.25	0.24	105	105	135	147
	12'-4"	9	11	10	9	4	6.5	5	7.0	5	15.5	5	15.5	4	6.5	5	7.0	5	7.0	5	11.5	0	5	11.0	4	14.0	0.42	0.95	0.37	0.39	0.41	0.23	0.36	0.38	0.25	0.24	106	105	135	147
	13'-11"	10	12	10	9	4	6.5	5	7.0	5	16.5	5	16.5	4	6.5	5	7.0	5	7.5	5	11.5	0	5	10.5	4	14.0	0.42	0.94	0.36	0.38	0.42	0.24	0.36	0.38	0.25	0.25	106	105	137	149
	15'-7"	10	12	10	9	4	6.0	5	6.5	5	15.0	5	15.0	4	6.0	5	6.0	5	7.0	5	11.5	0	5	10.0	4	14.0	0.41	0.94	0.36	0.38	0.41	0.24	0.35	0.38	0.25	0.25	106	105	137	149
	17'-2"	11	13	11	9	4	6.5	5	7.0	5	16.0	5	16.0	4	6.0	5	7.0	5	7.5	5	11.5	0	5	10.5	4	14.0	0.41	0.94	0.35	0.38	0.41	0.24	0.35	0.38	0.25	0.25	106	105	139	151
	18'-8"	12	13	11	9	4	6.5	5	6.5	5	16.5	5	16.5	5	9.0	5	6.5	5	7.0	5	11.5	0	5	10.0	4	14.0	0.41	0.93	0.35	0.38	0.41	0.25	0.34	0.38	0.25	0.25	106	105	140	152
	20'-4"	12	14	12	9	4	6.0	5	7.0	5	15.5	5	15.5	4	6.0	5	7.0	5	7.0	5	11.5	0	5	10.5	4	14.0	0.41	0.93	0.35	0.37	0.41	0.24	0.34	0.38	0.24	0.25	107	105	141	153
	21'-11"	13	14	12	9	4	6.0	5	7.0	5	16.5	5	16.5	5	9.0	5	6.5	5	7.0	5	11.5	0	5	10.0	4	14.0	0.41	0.93	0.34	0.37	0.41	0.25	0.34	0.38	0.24	0.25	107	105	142	154
	23'-6"	13	15	12	9	5	9.0	5	6.0	5	15.0	5	15.0	5	9.0	5	6.0	5	7.0	5	11.5	0	5	9.0	4	14.0	0.41	0.93	0.34	0.37	0.41	0.25	0.34	0.38	0.24	0.25	107	105	143	155
	25'-1"	14	15	13	9	5	9.0	5	7.0	5	15.5	5	15.5	5	8.5	5	6.5	5	7.0	5	11.5	0	5	10.0	4	14.0	0.41	0.92	0.34	0.37	0.41	0.25	0.34	0.38	0.24	0.26	107	105	144	156
	26'-9"	14	16	13	9	5	9.0	5	6.5	5	15.0	5	15.0	5	9.0	5	6.5	5	7.5	5	11.5	0	5	9.0	4	14.0	0.41	0.92	0.34	0.36	0.41	0.25	0.34	0.38	0.24	0.26	107	105	145	157
	28'-3"	15	16	13	9	5	9.0	5	6.0	5	15.5	5	15.5	5	8.5	5	6.0	5	7.0	5	11.5	0	5	9.0	4	14.0	0.40	0.92	0.34	0.37	0.46	0.26	0.38	0.43	0.29	0.31	107	105	146	158
	29'-11"	15	17	14	9	5	9.0	5	6.5	5	14.5	5	14.5	5	8.5	5	6.5	5	7.0	5	11.5	0	5	9.0	4	14.0	0.41	0.92	0.33	0.36	0.46	0.26	0.38	0.43	0.29	0.31	108	105	147	159
	31'-6"	16	17	14	9	5	9.0	5	6.0	5	15.0	5	15.0	5	8.0	5	6.0	5	7.0	5	11.5	0	5	9.0	4	14.0	0.41	0.91	0.33	0.36	0.46	0.26	0.38	0.42	0.29	0.31	108	105	148	160

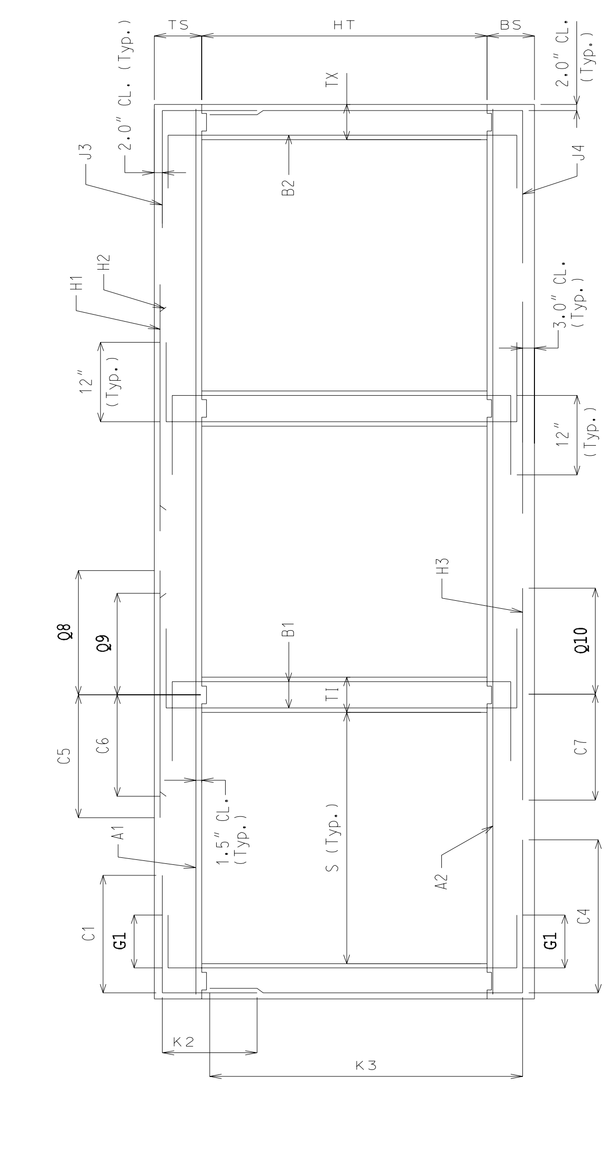

SECTION THRU BOX

NOTE: IF DESIGN FILL FALLS BETWEEN TABULATED FILLS, USE THE ADJACENT TABULATED FILL WHICH YIELDS THE GREATER MEMBER THICKNESS. IF THE MEMBER THICKNESSES ARE EQUAL, USE THE ADJACENT TABULATED FILL WHICH YIELDS THE GREATER AREA OF REINFORCEMENT.

SPECIAL DESIGNS ARE REQUIRED WHEN THE DESIGN FILL IS OUTSIDE THE RANGE OF TABULATED FILLS.

ALL DIMENSIONS ARE IN inch UNLESS OTHERWISE SPECIFIED.

COEFFICIENTS: DIMENSIONS MARKED WITH C# OR K# ARE THE PRODUCT OF THE COEFFICIENT AND ITS ASSOCIATED MULTIPLIER.

DESIGN FILL HEIGHT GIVEN IN THE TABLES IS THE HEIGHT FROM THE TOP OF THE EARTH FILL OR ROADWAY TO THE TOP OF THE TOP SLAB.

ALL CULVERTS MEET STRENGTH REQUIREMENTS FOR MILITARY 24 kips TANDEM AXLE LOADING.

MISSOURI HIGHWAY AND TRANSPORTATION COMMISSION

CONCRETE TRIPLE BOX CULVERT

MEMBER SIZES AND REINFORCEMENT

(HS20 & HS20 MOD. LOADING)

DATE:

EFFECTIVE: 04-01-2002

703.85B

Span (S) = 9 ft
HT (ft) = 6 or 7 or 8

	DESIGN FILL	MEMBER THICKNESSES				TOP SLAB BARS								BOTTOM SLAB BARS						WALL BARS							COEFFICIENTS (see note)										"C" Multiplier	"Q" Multiplier	"K" Multiplier		
		TS	BS	TX	TI	A1	Bars	J3	Bars	H1	Bars	H2	Bars	A2	Bars	J4	Bars	H3	Bars	B1	Bars	B2 Bars			F	Bars	J4		H3		J3		H1		H2		S = 9 ft	S = 9 ft	HT = 6 ft	HT = 7 ft	HT = 8 ft
	(ft-in)	Thick	Thick.	Thick	Thick.	Size	c to c	Size	c to c	Size	c to c	Size	c to c	Size	c to c	Size	c to c	Size	c to c	Size	c to c	G1	Size	c to c	Size	c to c	C4	K3	C7	Q10	C1	K2	C5	Q8	C6	Q9	in	in	in	in	in
HS20	0'-8"	12	13	8	8	5	7.0	4	6.5	5	14.5	5	14.5	4	6.0	6	6.0	5	7.0	5	7.0	16	6	7.5	4	14.0	0.45	0.91	0.61	0.60	0.43	0.32	0.82	0.60	0.36	0.30	116	116	92	104	116
	2'-4"	11	12	8	8	5	8.0	5	9.0	5	14.5	5	14.5	4	7.0	5	6.0	5	6.0	5	9.0	16	5	11.5	4	14.0	0.39	0.92	0.53	0.60	0.50	0.32	0.82	0.60	0.29	0.28	116	116	90	102	114
	4'-3"	8	9	8	8	5	9.0	5	9.0	5	13.0	5	13.0	4	6.5	5	7.5	6	7.0	5	8.5	16	5	11.5	4	14.0	0.36	0.94	0.45	0.48	0.40	0.31	0.40	0.60	0.25	0.22	116	116	84	96	108
	5'-11"	8	10	8	8	4	6.0	5	9.0	5	13.5	5	13.5	4	6.0	5	9.0	6	7.0	5	11.0	16	5	11.5	4	14.0	0.33	0.94	0.41	0.43	0.35	0.31	0.38	0.44	0.24	0.23	116	116	85	97	109
	7'-6"	8	10	8	8	5	9.0	5	8.5	5	12.5	5	12.5	4	6.0	5	9.0	5	6.0	5	11.5	16	5	11.5	4	14.0	0.31	0.94	0.37	0.40	0.32	0.30	0.37	0.40	0.24	0.23	116	116	85	97	109
HS20 MOD	0'-6"	14	15	8	8	5	7.0	4	6.5	5	14.0	5	14.0	5	7.0	6	6.0	5	6.5	5	7.0	16	6	7.0	4	14.0	0.65	0.90	0.62	0.60	0.43	0.33	0.82	0.60	0.40	0.60	116	116	96	108	120
	2'-4"	11	12	8	8	5	6.5	5	7.0	5	12.5	5	12.5	4	6.0	6	7.0	6	7.0	5	7.0	16	5	11.0	4	14.0	0.42	0.92	0.58	0.62	0.43	0.37	0.82	0.60	0.29	0.29	116	116	90	102	114
	4'-2"	9	10	8	8	5	8.0	5	8.5	6	16.5	6	16.5	4	6.0	5	7.0	6	6.0	5	7.0	16	5	11.5	4	14.0	0.36	0.93	0.47	0.50	0.42	0.36	0.44	0.62	0.28	0.24	116	116	86	98	110
	5'-10"	9	10	8	8	4	6.0	5	8.5	5	14.5	5	14.5	4	6.0	5	8.0	6	8.0	5	11.5	16	5	11.5	4	14.0	0.33	0.93	0.43	0.46	0.36	0.31	0.39	0.51	0.25	0.24	116	116	86	98	110
	7'-5"	9	10	8	8	4	6.0	5	8.5	5	14.5	5	14.5	5	9.0	5	8.5	6	8.0	5	11.5	16	5	11.5	4	14.0	0.31	0.93	0.40	0.43	0.32	0.36	0.38	0.44	0.24	0.24	116	116	86	98	110
HS20 MOD or HS20	9'-1"	9	11	8	8	5	9.0	5	8.5	5	14.5	5	14.5	4	6.0	4	6.5	5	6.5	5	11.5	0	5	11.5	4	14.0	0.29	0.93	0.36	0.40	0.30	0.31	0.35	0.38	0.23	0.22	116	116	87	99	111
	10'-8"	10	11	8	8	5	9.0	5	8.5	5	15.5	5	15.5	5	9.0	4	6.0	5	6.0	5	11.5	0	5	11.5	4	14.0	0.28	0.92	0.35	0.39	0.29	0.32	0.34	0.38	0.23	0.23	116	116	88	100	112
	12'-3"	10	12	8	8	5	8.5	5	7.5	5	13.5	5	13.5	5	9.0	5	9.0	5	6.5	5	11.5	0	5	11.5	4	14.0	0.28	0.93	0.34	0.38	0.28	0.32	0.34	0.38	0.23	0.23	116	116	89	101	113
	13'-10"	11	13	8	8	5	8.5	5	7.5	5	14.5	5	14.5	5	8.0	5	9.0	5	6.0	5	11.5	0	5	11.5	4	14.0	0.27	0.92	0.34	0.38	0.28	0.32	0.34	0.38	0.23	0.23	116	116	91	103	115
	15'-6"	11	13	8	8	5	8.0	5	7.0	5	13.0	5	13.0	5	8.0	5	8.0	5	6.5	5	11.5	0	5	11.5	4	14.0	0.27	0.92	0.33	0.38	0.28	0.32	0.34	0.38	0.23	0.23	116	116	91	103	115
	17'-1"	12	14	8	8	5	8.0	5	7.0	5	13.5	5	13.5	5	8.5	5	7.5	5	6.5	5	11.5	0	5	11.5	4	14.0	0.27	0.91	0.33	0.38	0.27	0.33	0.33	0.38	0.23	0.24	116	116	93	105	117
	18'-7"	13	14	9	8	5	8.0	5	8.0	5	14.0	5	14.0	5	7.5	5	8.5	5	6.0	5	11.5	0	5	11.5	4	14.0	0.27	0.90	0.33	0.38	0.27	0.33	0.33	0.38	0.23	0.24	117	116	94	106	118
	20'-3"	13	15	9	8	5	7.5	5	7.0	5	12.5	5	12.5	5	7.5	5	8.5	5	6.5	5	11.5	0	5	11.5	4	14.0	0.27	0.90	0.33	0.38	0.27	0.33	0.33	0.38	0.23	0.24	117	116	95	107	119
	21'-10"	14	16	9	8	5	7.5	5	7.0	5	13.0	5	13.0	5	7.5	5	8.0	5	6.5	5	11.5	0	5	11.5	4	14.0	0.27	0.90	0.32	0.38	0.27	0.33	0.33	0.38	0.23	0.24	117	116	97	109	121
	23'-5"	14	16	10	8	5	7.0	5	7.5	5	12.5	5	12.5	5	7.0	5	8.5	5	6.0	5	11.5	0	5	11.5	4	14.0	0.27	0.90	0.32	0.38	0.28	0.37	0.33	0.38	0.23	0.24	117	116	97	109	121
	25'-0"	15	17	10	8	5	7.0	5	7.5	5	12.5	5	12.5	5	7.0	5	8.5	5	6.5	5	11.5	0	5	11.5	4	14.0	0.27	0.89	0.32	0.38	0.32	0.34	0.37	0.43	0.27	0.29	117	116	99	111	123
	26'-7"	16	17	10	8	5	7.0	5	7.5	5	13.0	5	13.0	5	7.0	5	7.5	5	6.0	5	11.5	0	5	11.5	4	14.0	0.27	0.88	0.32	0.38	0.31	0.34	0.37	0.43	0.27	0.29	117	116	100	112	124
	28'-2"	16	18	10	8	5	7.0	5	7.0	5	12.5	5	12.5	5	7.0	5	7.5	5	6.0	5	11.5	0	5	11.5	4	14.0	0.27	0.88	0.32	0.37	0.32	0.34	0.37	0.43	0.27	0.29	117	116	101	113	125
	29'-9"	17	18	11	8	5	7.0	5	8.5	5	12.5	5	12.5	5	7.0	5	8.5	5	6.0	5	11.5	0	5	11.5	4	14.0	0.27	0.88	0.32	0.37	0.32	0.34	0.37	0.42	0.27	0.29	118	116	102	114	126
	31'-5"	17	19	11	8	5	7.0	5	7.5	5	12.0	5	12.0	5	7.0	5	8.5	5	6.0	5	11.5	0	5	11.5	4	14.0	0.27	0.88	0.31	0.37	0.32	0.34	0.37	0.42	0.27	0.29	118	116	103	115	127

SPAN (S) = 9 ft
HT (ft) = 9 or 10

	DESIGN FILL	MEMBER THICKNESSES				TOP SLAB BARS								BOTTOM SLAB BARS						WALL BARS							COEFFICIENTS (see note)										"C" Multiplier	"Q" Multiplier	"K" Multiplier	
		TS	BS	TX	TI	A1	Bars	J3	Bars	H1	Bars	H2	Bars	A2	Bars	J4	Bars	H3	Bars	B1	Bars	B2 Bars			F	Bars	J4		H3		J3		H1		H2		S = 9 ft	S = 9 ft	HT = 9 ft	HT = 10 ft
	(ft-in)	Thick	Thick.	Thick	Thick.	Size	c to c	Size	c to c	Size	c to c	Size	c to c	Size	c to c	Size	c to c	Size	c to c	Size	c to c	G1	Size	c to c	Size	c to c	C4	K3	C7	Q10	C1	K2	C5	Q8	C6	Q9	in	in	in	in
HS20	0'-8"	12	13	9	9	5	7.0	4	6.0	5	15.0	5	15.0	4	6.0	6	6.5	5	7.0	5	8.5	16	5	6.5	4	14.0	0.66	0.93	0.62	0.60	0.43	0.23	0.82	0.60	0.36	0.25	117	117	128	140
	2'-4"	11	12	9	9	5	8.0	5	8.5	5	14.5	5	14.5	4	7.0	6	8.5	5	6.0	5	10.5	16	5	11.5	4	14.0	0.46	0.93	0.54	0.60	0.44	0.27	0.82	0.60	0.29	0.26	117	117	126	138
	4'-3"	8	9	9	9	5	9.0	5	8.5	5	13.0	5	13.0	4	6.0	5	6.0	6	7.0	5	10.0	16	5	11.5	4	14.0	0.40	0.95	0.45	0.47	0.46	0.23	0.41	0.51	0.25	0.22	117	117	120	132
	5'-11"	8	10	9	9	4	6.0	5	8.5	5	13.5	5	13.5	4	6.5	5	8.0	5	6.0	5	11.5	16	5	11.5	4	14.0	0.38	0.95	0.40	0.42	0.40	0.23	0.38	0.42	0.25	0.23	117	117	121	133
	7'-6"	8	10	9	9	4	6.0	5	8.0	5	13.0	5	13.0	4	6.0	5	7.5	5	6.0	5	11.5	16	5	11.5	4	14.0	0.36	0.95	0.37	0.39	0.37	0.25	0.37	0.39	0.24	0.23	117	117	121	133
HS20 MOD	0'-8"	12	13	9	9	6	8.0	5	8.0	5	12.0	5	12.0	5	7.5	7	7.0	6	8.0	5	7.0	16	6	7.0	4	14.0	0.69	0.93	0.64	0.62	0.44	0.27	0.82	0.60	0.36	0.24	117	117	128	140
	2'-5"	10	10	9	9	5	6.0	5	6.5	6	14.5	6	14.5	5	8.5	6	6.5	7	7.5	5	6.0	16	5	10.0	4	14.0	0.45	0.94	0.57	0.65	0.44	0.26	0.84	0.62	0.31	0.26	117	117	123	135
	4'-2"	9	10	9	9	5	8.5	5	8.0	5	13.5	5	13.5	4	6.5	5	7.0	6	7.5	5	10.0	16	5	11.5	4	14.0	0.40	0.95	0.47	0.49	0.48	0.26	0.42	0.60	0.26	0.23	117	117	122	134
	5'-10"	9	10	9	9	4	6.0	5	8.0	5	14.5	5	14.5	4	6.0	5	7.0	6	7.5	5	11.5	16	5	11.5	4	14.0	0.38	0.95	0.43	0.45	0.42	0.26	0.39	0.50	0.25	0.24	117	117	122	134
	7'-5"	9	11	9	9	4	6.0	5	7.5	5	14.5	5	14.5	5	9.0	5	7.5	6	8.0	5	11.5	16	5	11.5	4	14.0	0.37	0.95	0.40	0.42	0.38	0.26	0.38	0.42	0.25	0.24	117	117	123	135
HS20 MOD or HS20	9'-1"	9	11	9	9	5	9.0	5	7.5	5	14.5	5	14.5	4	6.0	5	8.5	5	6.5	5	11.5	0	5	11.5	4	14.0	0.35	0.95	0.36	0.39	0.35	0.26	0.35	0.37	0.24	0.22	117	117	123	135
	10'-8"	10	12	9	9	4	6.0	5	7.0	5	15.5	5	15.5	5	9.0	5	7.5	5	6.0	5	11.5	0	5	11.5	4	14.0	0.34	0.94	0.36	0.38	0.34	0.26	0.35	0.38	0.23	0.22	117	117	125	137
	12'-3"	10	12	9	9	5	9.0	5	7.0	5	14.0	5	14.0	5	9.0	5	7.0	5	6.5	5	11.5	0	5	11.5	4	14.0	0.33	0.94	0.35	0.38	0.33	0.26	0.34	0.37	0.23	0.23	117	117	125	137
	13'-10"	11	13	9	9	5	9.0	5	6.5	5	14.5	5	14.5	5	9.0	5	7.0	5	7.0	5	11.5	0	5	11.5	4	14.0	0.33	0.93	0.34	0.38	0.33	0.26	0.34	0.37	0.23	0.23	117	117	127	139
	15'-6"	11	13	10	9	5	8.0	5	7.0	5	13.0	5	13.0	5	8.0	5	7.0	5	6.5	5	11.5	0	5	11.5	4	14.0	0.33	0.93	0.34	0.37	0.33	0.26	0.34	0.37	0.23	0.23	118	117	127	139
	17'-1"	12	14	10	9	5	8.5	5	6.5	5	14.0	5	14.0	5	8.5	5	7.0	5	6.5	5	11.5	0	5	11.5	4	14.0	0.33	0.93	0.34	0.37	0.33	0.27	0.34	0.37	0.23	0.24	118	117	129	141
	18'-7"	13	14	10	9	5	8.5	5	6.5	5	14.5	5	14.5	5	7.5	5	6.5	5	6.0	5	11.5	0	5	11.5	4	14.0	0.32	0.92	0.33	0.37	0.32	0.27	0.33	0.37	0.23	0.24	118	117	130	142
	20'-3"	13	15	11	9	5	8.0	5	7.0	5	13.0	5	13.0	5	8.0	5	7.0	5	6.5	5	11.5	0	5	11.5	4	14.0	0.33	0.92	0.33	0.37	0.33	0.27	0.33	0.37	0.23	0.24	118	117	131	143
	21'-10"	14	16	11	9	5	8.0	5	6.5	5	13.5	5	13.5	5	8.0	5	7.0	5	6.5	5	11.5	0	5	11.5	4	14.0	0.33	0.92	0.33	0.37	0.33	0.27	0.33	0.37	0.23	0.24	118	117	133	145
	23'-5"	14	16	11	9	5	7.5	5	6.0	5	12.5	5	12.5	5	7.0	5	6.5	5	6.0	5	11.5	0	5	11.5	4	14.0	0.32	0.92	0.33	0.37	0.33	0.27	0.33	0.37	0.23	0.24	118	117	133	145
	25'-0"	15	17	12	9	5	7.5	5	7.0	5	13.0	5	13.0	5	7.5	5	7.0	5	6.5	5	11.5	0	5	11.5	4	14.0	0.33	0.91	0.32	0.36	0.37	0.28	0.37	0.42	0.27	0.29	119	117	135	147
	26'-7"	16	17	12	9	5	7.5	5	6.5	5	13.0	5	13.0	5	7.0	5	6.5	5	6.0	5	11.5	0	5	11.5	4	14.0	0.33	0.90	0.32	0.37	0.37	0.28	0.37	0.42	0.27	0.29	119	117	136	148
	28'-2"	16	18	12	9	5	7.0	5	6.0	5	12.5	5	12.5	5	7.0	5	6.5	5	6.0	5	11.5	0	5	11.0	4	14.0	0.32	0.90	0.32	0.36	0.37	0.28	0.37	0.42	0.27	0.29	119	117	137	149
	29'-9"	17	18	13	9	5	7.5	5	7.0	5	13.0	5	13.0	5	7.0	5	7.0	5	6.0	5	11.5	0	5	11.5	4	14.0	0.33	0.90	0.32	0.36	0.37	0.29	0.37	0.41	0.27	0.29	119	117	138	150
	31'-5"	17	19	13	9	5	7.0	5	6.5	5	12.5	5	12.5	5	7.0	5	6.5	5	6.0	5	11.5	0	5	11.0	4	14.0	0.33	0.90	0.32	0.36	0.37	0.28	0.37	0.42	0.27	0.29	119	117	139	151

SPAN (S) = 9 ft
HT (ft) = 11 or 12

	DESIGN FILL	MEMBER THICKNESSES				TOP SLAB BARS								BOTTOM SLAB BARS						WALL BARS							COEFFICIENTS (see note)										"C" Multiplier	"Q" Multiplier	"K" Multiplier	
		TS	BS	TX	TI	A1	Bars	J3	Bars	H1	Bars	H2	Bars	A2	Bars	J4	Bars	H3	Bars	B1	Bars	B2 Bars			F	Bars	J4		H3		J3		H1		H2		S = 9 ft	S = 9 ft	HT = 11 ft	HT = 12 ft
	(ft-in)	Thick	Thick.	Thick	Thick.	Size	c to c	Size	c to c	Size	c to c	Size	c to c	Size	c to c	Size	c to c	Size	c to c	Size	c to c	G1	Size	c to c	Size	c to c	C4	K3	C7	Q10	C1	K2	C5	Q8	C6	Q9	in	in	in	in
HS20	0'-8"	12	13	10	10	5	6.5	5	8.5	5	14.5	5	14.5	5	9.0	6	6.0	5	7.0	5	9.0	16	5	6.0	4	14.0	0.66	0.94	0.62	0.60	0.44	0.23	0.82	0.60	0.36	0.29	118	118	152	164
	2'-6"	9	10	10	10	5	6.5	5	7.0	6	16.0	6	16.0	4	6.0	6	6.5	6	6.5	5	7.0	16	5	11.0	4	14.0	0.53	0.95	0.54	0.62	0.44	0.22	0.84	0.62	0.31	0.24	118	118	146	158
	4'-3"	8	9	10	10	5	9.0	5	7.0	5	12.5	5	12.5	4	6.0	6	7.0	6	7.0	5	10.5	16	5	9.0	4	14.0	0.47	0.96	0.46	0.47	0.52	0.21	0.41	0.60	0.26	0.22	118	118	144	156
	5'-11"	8	10	10	10	4	6.0	5	6.5	5	13.5	5	13.5	4	6.0	5	6.0	5	6.0	5	11.5	16	5	8.5	4	14.0	0.44	0.96	0.41	0.42	0.46	0.21	0.38	0.43	0.25	0.23	118	118	145	157
	7'-6"	8	10	10	10	5	9.0	5	6.0	5	12.5	5	12.5	5	9.0	6	8.5	5	6.0	5	11.5	16	5	11.0	4	14.0	0.44	0.96	0.38	0.39	0.43	0.21	0.37	0.40	0.24	0.23	118	118	145	157
HS20 MOD	0'-8"	12	13	10	10	6	7.5	5	7.0	5	12.0	5	12.0	5	7.0	7	7.0	6	7.5	5	7.0	16	6	7.0	4	14.0	0.70	0.94	0.64	0.62	0.44	0.23	0.82	0.60	0.37	0.29	118	118	152	164
	2'-4"	11	11	10	10	5	6.5	5	6.0	6	16.5	6	16.5	5	8.5	6	6.5	7	7.5	5	7.0	16	5	9.0	4	14.0	0.54	0.94	0.56	0.65	0.44	0.23	0.84	0.62	0.32	0.31	118	118	149	161
	4'-2"	9	12	10	10	5	8.5	5	7.0	5	13.0	5	13.0	4	6.0	5	6.0	6	7.0	5	10.5	16	5	11.0	4	14.0	0.49	0.95	0.51	0.49	0.52	0.22	0.81	0.60	0.26	0.23	118	118	148	160
	5'-10"	9	10	10	10	4	6.0	5	7.0	5	14.5	5	14.5	5	9.0	6	8.0	6	7.5	5	11.5	16	5	11.5	4	14.0	0.46	0.95	0.43	0.45	0.48	0.22	0.40	0.51	0.25	0.24	118	118	146	158
	7'-5"	9	11	10	10	4	6.0	5	7.0	5	14.5	5	14.5	5	9.5	5	6.5	5	6.5	5	11.5	16	5	11.5	4	14.0	0.43	0.95	0.39	0.40	0.44	0.21	0.38	0.43	0.25	0.24	118	118	147	159
HS20 MOD or HS20	9'-1"	9	11	10	10	5	9.0	5	7.0	5	14.5	5	14.5	4	6.0	5	7.0	5	6.0	5	11.5	0	5	11.0	4	14.0	0.42	0.95	0.37	0.39	0.41	0.21	0.35	0.38	0.24	0.22	118	118	147	159
	10'-8"	10	12	10	10	4	6.0	5	6.0	5	15.5	5	15.5	4	6.0	5	6.5	5	7.0	5	11.5	0	5	10.0	4	14.0	0.41	0.95	0.36	0.38	0.41	0.22	0.35	0.38	0.24	0.23	118	118	149	161
	12'-3"	10	12	10	10	5	9.0	6	8.5	5	14.0	5	14.0	5	9.0	6	8.5	5	6.5	5	11.5	0	5	9.0	4	14.0	0.43	0.95	0.36	0.38	0.42	0.23	0.35	0.37	0.24	0.23	118	118	149	161
	13'-10"	11	13	11	10	5	9.0	5	6.5	5	14.5	5	14.5	5	9.0	5	6.0	5	7.0	5	11.5	0	5	10.0	4	14.0	0.40	0.94	0.35	0.37	0.39	0.22	0.34	0.37	0.23	0.23	119	118	151	163
	15'-6"	11	13	11	10	5	8.5	5	6.0	5	13.5	5	13.5	5	8.5	6	8.5	5	6.5	5	11.5	0	5	9.0	4	14.0	0.42	0.94	0.34	0.37	0.39	0.22	0.34	0.37	0.23	0.23	119	118	151	163
	17'-1"	12	14	12	10	5	9.0	5	6.5	5	14.0	5	14.0	5	8.5	5	6.0	5	6.5	5	11.5	0	5	9.5	4	14.0	0.39	0.94	0.34	0.37	0.39	0.23	0.34	0.37	0.23	0.24	119	118	153	165
	18'-7"	13	15	12	10	5	9.0	5	6.0	5	14.5	5	14.5	5	8.5	6	8.5	5	7.0	5	11.5	0	5	9.0	4	14.0	0.41	0.93	0.34	0.36	0.39	0.23	0.33	0.37	0.23	0.24	119	118	155	167
	20'-3"	13	15	12	10	5	8.5	6	8.0	5	13.0	5	13.0	5	8.0	6	8.0	5	6.0	5	11.5	0	5	9.0	4	14.0	0.41	0.93	0.34	0.36	0.41	0.24	0.33	0.37	0.23	0.24	119	118	155	167
	21'-10"	14	16	13	10	5	8.5	5	6.0	5	13.5	5	13.5	5	8.0	6	8.5	5	6.5	5	11.5	0	5	9.0	4	14.0	0.41	0.93	0.33	0.36	0.39	0.23	0.33	0.37	0.23	0.24	120	118	157	169
	23'-5"	14	16	13	10	5	8.0	6	8.0	5	12.5	5	12.5	5	7.5	6	8.0	5	6.0	5	11.5	0	5	9.0	4	14.0	0.41	0.93	0.33	0.36	0.41	0.26	0.33	0.37	0.23	0.24	120	118	157	169
	25'-0"	15	17	14	10	5	8.0	5	6.0	5	13.0	5	13.0	5	7.5	6	8.5	5	6.0	5	11.5	0	5	9.0	4	14.0	0.41	0.92	0.33	0.36	0.43	0.24	0.37	0.42	0.27	0.29	120	118	159	171
	26'-7"	16	17	14	10	5	8.0	6	8.5	5	13.0	5	13.0	5	7.0	6	8.0	6	8.5	5	11.5	0	5	8.5	4	14.0	0.41	0.92	0.35	0.38	0.45	0.25	0.37	0.41	0.27	0.29	120	118	160	172
	28'-2"	16	18	14	10	5	7.5	6	8.0	5	12.5	5	12.5	5	7.5	6	8.0	5	6.0	5	11.5	0	5	8.5	4	14.0	0.41	0.92	0.33	0.36	0.45	0.27	0.37	0.41	0.27	0.29	120	118	161	173
	29'-9"	17	18	15	10	5	8.0	6	8.5	5	13.0	5	13.0	5	7.0	6	8.0	5	6.0	5	11.5	0	5	8.5	4	14.0	0.41	0.91	0.32	0.35	0.45	0.25	0.37	0.41	0.27	0.29	121	118	162	174
	31'-5"	17	19	15	10	5	7.5	6	8.0	5	12.5	5	12.5	5	7.0	6	8.0	5	6.0	5	11.5	0	5	8.5	4	14.0	0.41	0.91	0.32	0.35	0.45	0.27	0.37	0.41	0.27	0.29	121	118	163	175

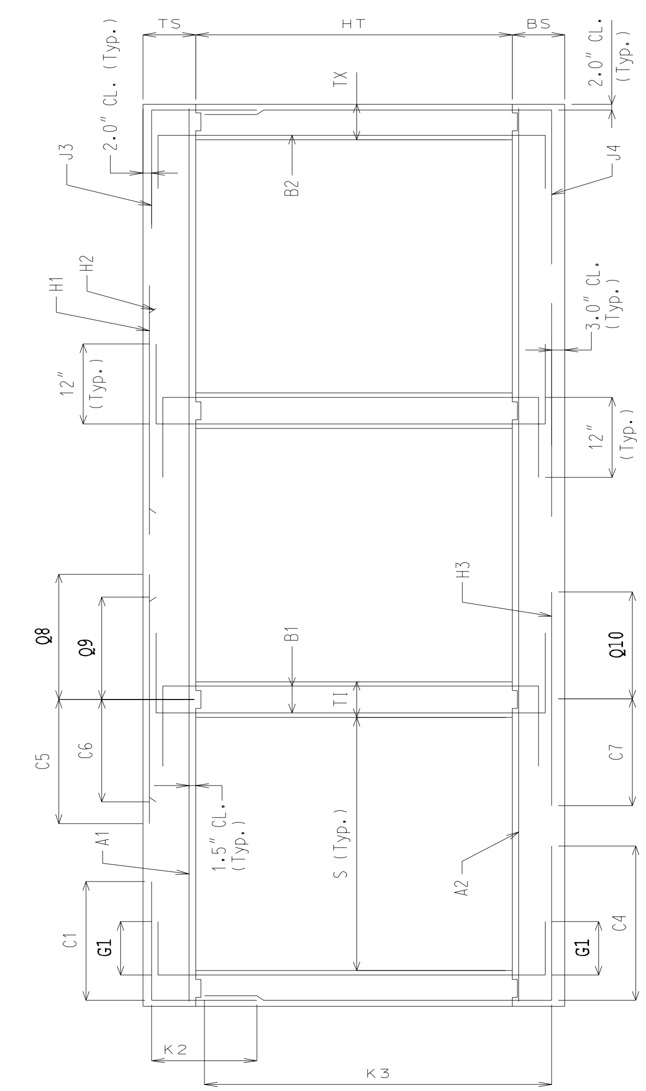

SECTION THRU BOX

NOTE: IF DESIGN FILL FALLS BETWEEN TABULATED FILLS, USE THE ADJACENT TABULATED FILL WHICH YIELDS THE GREATER MEMBER THICKNESS. IF THE MEMBER THICKNESSES ARE EQUAL, USE THE ADJACENT TABULATED FILL WHICH YIELDS THE GREATER AREA OF REINFORCEMENT.

SPECIAL DESIGNS ARE REQUIRED WHEN THE DESIGN FILL IS OUTSIDE THE RANGE OF TABULATED FILLS.

ALL DIMENSIONS ARE IN inch UNLESS OTHERWISE SPECIFIED.

COEFFICIENTS: DIMENSIONS MARKED WITH C# OR K# ARE THE PRODUCT OF THE COEFFICIENT AND ITS ASSOCIATED MULTIPLIER.

DESIGN FILL HEIGHT GIVEN IN THE TABLES IS THE HEIGHT FROM THE TOP OF THE EARTH FILL OR ROADWAY TO THE TOP OF THE TOP SLAB.

ALL CULVERTS MEET STRENGTH REQUIREMENTS FOR MILITARY 24 kips TANDEM AXLE LOADING.

MISSOURI HIGHWAY AND TRANSPORTATION COMMISSION

CONCRETE TRIPLE BOX CULVERT

MEMBER SIZES AND REINFORCEMENT

(HS20 & HS20 MOD. LOADING)

DATE:

EFFECTIVE: 04-01-2002

703.85B

Span (S) = 10 ft; HT (ft) = 7 or 8 or 9

Loading	DESIGN FILL (ft-in)	TS Thick	BS Thick.	TX Thick	TI Thick.	A1 Size	A1 Bars c to c	J3 Size	J3 Bars c to c	H1 Size	H1 Bars c to c	H2 Size	H2 Bars c to c	A2 Size	A2 Bars c to c	J4 Size	J4 Bars c to c	H3 Size	H3 Bars c to c	B1 Size	B1 Bars c to c	G1	B2 Bars Size	B2 Bars c to c	F Size	F Bars c to c	J4 C4	J4 K3	H3 C7	H3 Q10	J3 C1	J3 K2	H1 C5	H1 Q8	H2 C6	H2 Q9	"C" Multiplier S = 10 ft (in)	"Q" Multiplier S = 10 ft (in)	"K" Multiplier HT = 7 ft (in)	"K" Multiplier HT = 8 ft (in)	"K" Multiplier HT = 9 ft (in)
HS20	0'-8"	12	13	9	9	5	6.0	5	9.0	5	14.5	5	14.5	4	7.0	5	7.0	5	6.0	5	7.0	16	5	11.0	4	14.0	0.43	0.92	0.58	0.59	0.42	0.30	0.80	0.59	0.25	0.32	129	129	104	116	128
	2'-4"	11	12	9	9	5	7.0	5	7.5	5	12.0	5	12.0	4	6.0	6	7.0	6	7.0	5	7.5	16	5	11.5	4	14.0	0.41	0.93	0.53	0.61	0.49	0.33	0.80	0.59	0.28	0.23	129	129	102	114	126
	4'-3"	8	9	9	9	5	7.0	5	7.5	6	14.5	6	14.5	5	8.5	6	8.5	7	8.0	5	7.0	16	5	11.5	4	14.0	0.38	0.95	0.46	0.50	0.40	0.32	0.42	0.53	0.26	0.23	129	129	96	108	120
	5'-11"	8	10	9	9	5	7.5	5	7.5	6	15.0	6	15.0	5	8.5	5	7.0	6	7.0	5	9.0	16	5	11.5	4	14.0	0.33	0.95	0.40	0.44	0.36	0.31	0.39	0.44	0.25	0.23	129	129	97	109	121
	7'-5"	9	11	9	9	5	8.5	5	7.5	5	12.0	5	12.0	5	9.0	5	8.5	6	8.0	5	11.5	16	5	11.5	4	14.0	0.31	0.94	0.38	0.42	0.32	0.32	0.36	0.40	0.23	0.22	129	129	99	111	123
HS20 MOD	0'-8"	12	13	9	9	6	7.0	5	7.0	5	12.0	5	12.0	5	9.0	5	6.0	6	7.0	6	7.0	16	5	8.5	4	14.0	0.43	0.92	0.61	0.61	0.42	0.33	0.80	0.59	0.25	0.34	129	129	104	116	128
	2'-3"	12	13	9	9	6	8.0	5	6.5	6	14.0	6	14.0	5	8.5	6	6.0	7	7.5	5	6.0	16	5	8.5	4	14.0	0.42	0.92	0.56	0.63	0.42	0.33	0.83	0.61	0.30	0.31	129	129	104	116	128
	4'-2"	9	10	9	9	5	7.0	5	7.0	6	15.5	6	15.5	5	9.0	5	6.0	6	6.0	5	7.0	16	5	11.5	4	14.0	0.36	0.94	0.45	0.49	0.42	0.32	0.42	0.61	0.27	0.23	129	129	98	110	122
	5'-10"	9	10	9	9	5	7.5	5	7.0	6	16.5	6	16.5	5	8.0	5	7.0	6	6.0	5	9.5	16	5	11.5	4	14.0	0.33	0.94	0.41	0.45	0.36	0.32	0.40	0.51	0.26	0.24	129	129	98	110	122
	7'-5"	9	11	9	9	5	7.5	5	7.0	6	16.5	6	16.5	5	8.0	5	7.5	6	7.0	5	11.5	16	5	11.5	4	14.0	0.31	0.94	0.39	0.43	0.32	0.32	0.38	0.44	0.25	0.24	129	129	99	111	123
HS20 MOD or HS20	9'-0"	10	12	9	9	5	8.0	5	7.5	5	13.0	5	13.0	5	9.0	4	6.0	6	8.5	5	11.5	0	5	11.5	4	14.0	0.28	0.93	0.37	0.41	0.29	0.32	0.34	0.38	0.22	0.21	129	129	101	113	125
	10'-8"	10	12	9	9	5	7.0	5	7.0	5	12.0	5	12.0	5	8.0	5	8.5	6	7.5	5	11.5	0	5	11.5	4	14.0	0.28	0.93	0.36	0.40	0.29	0.32	0.34	0.37	0.22	0.21	129	129	101	113	125
	12'-2"	11	13	9	9	5	7.5	5	7.0	5	12.5	5	12.5	5	8.0	5	8.5	6	8.5	5	11.5	0	5	11.5	4	14.0	0.27	0.93	0.35	0.40	0.28	0.32	0.33	0.37	0.22	0.22	129	129	103	115	127
	13'-9"	12	14	9	9	5	7.5	5	7.0	5	12.5	5	12.5	5	7.0	5	7.5	6	7.5	5	11.5	0	5	11.5	4	14.0	0.27	0.92	0.35	0.39	0.27	0.33	0.33	0.38	0.22	0.22	129	129	105	117	129
	15'-5"	12	14	9	9	5	7.0	5	6.5	6	16.5	6	16.5	5	7.0	5	7.0	6	8.0	5	11.5	0	5	11.5	4	14.0	0.27	0.92	0.34	0.39	0.27	0.33	0.35	0.39	0.24	0.24	129	129	105	117	129
	17'-0"	13	15	9	9	5	7.0	5	6.5	5	12.0	5	12.0	5	7.0	5	7.0	6	8.5	5	11.5	0	5	11.5	4	14.0	0.26	0.91	0.34	0.39	0.27	0.33	0.32	0.37	0.22	0.23	129	129	107	119	131
	18'-6"	14	16	10	9	5	7.0	5	7.0	5	12.5	5	12.5	5	7.0	5	7.5	6	8.5	5	11.5	0	5	11.5	4	14.0	0.27	0.91	0.34	0.39	0.27	0.33	0.32	0.38	0.22	0.23	130	129	109	121	133
	20'-2"	14	16	10	9	5	6.5	5	7.0	6	16.5	6	16.5	5	7.0	5	7.0	6	8.0	5	11.5	0	5	11.5	4	14.0	0.26	0.91	0.34	0.39	0.27	0.33	0.34	0.39	0.24	0.25	130	129	109	121	133
	21'-9"	15	17	10	9	5	7.0	5	6.5	6	16.5	6	16.5	5	7.0	5	7.0	6	8.0	5	11.5	0	5	11.5	4	14.0	0.26	0.90	0.33	0.39	0.30	0.34	0.38	0.43	0.27	0.29	130	129	111	123	135
	23'-3"	16	18	10	9	5	7.0	5	6.5	6	16.5	6	16.5	5	7.0	5	7.0	6	8.0	5	11.5	0	5	11.5	4	14.0	0.26	0.90	0.33	0.39	0.30	0.34	0.37	0.43	0.27	0.29	130	129	113	125	137
	24'-11"	16	18	11	9	5	6.5	5	7.0	6	16.0	6	16.0	5	6.5	5	7.0	6	7.5	5	11.5	0	5	11.5	4	14.0	0.26	0.90	0.33	0.38	0.31	0.34	0.37	0.43	0.27	0.29	130	129	113	125	137
	26'-6"	17	19	11	9	5	6.5	5	7.0	6	16.0	6	16.0	5	6.5	5	7.0	6	8.0	5	11.5	0	5	11.5	4	14.0	0.26	0.89	0.33	0.38	0.30	0.34	0.37	0.43	0.27	0.29	130	129	115	127	139
	28'-0"	18	19	11	9	5	6.5	5	7.0	6	16.5	6	16.5	5	6.0	5	7.0	6	7.0	5	11.5	0	5	11.5	4	14.0	0.26	0.88	0.33	0.38	0.30	0.35	0.37	0.43	0.27	0.29	130	129	116	128	140
	29'-8"	18	20	12	9	5	6.0	5	7.0	6	15.0	6	15.0	5	6.0	5	7.0	6	7.5	5	11.5	0	5	11.5	4	14.0	0.27	0.88	0.33	0.38	0.31	0.35	0.37	0.43	0.27	0.29	131	129	117	129	141
	31'-3"	19	21	12	9	5	6.0	5	7.0	6	15.5	6	15.5	5	6.0	5	7.0	6	7.5	5	11.5	0	5	11.5	4	14.0	0.27	0.88	0.33	0.38	0.31	0.35	0.37	0.43	0.27	0.29	131	129	119	131	143

SPAN (S) = 10 ft; HT (ft) = 10 or 11

Loading	DESIGN FILL (ft-in)	TS Thick	BS Thick.	TX Thick	TI Thick.	A1 Size	A1 Bars c to c	J3 Size	J3 Bars c to c	H1 Size	H1 Bars c to c	H2 Size	H2 Bars c to c	A2 Size	A2 Bars c to c	J4 Size	J4 Bars c to c	H3 Size	H3 Bars c to c	B1 Size	B1 Bars c to c	G1	B2 Bars Size	B2 Bars c to c	F Size	F Bars c to c	J4 C4	J4 K3	H3 C7	H3 Q10	J3 C1	J3 K2	H1 C5	H1 Q8	H2 C6	H2 Q9	"C" Multiplier S = 10 ft (in)	"Q" Multiplier S = 10 ft (in)	"K" Multiplier HT = 10 ft (in)	"K" Multiplier HT = 11 ft (in)
HS20	0'-8"	12	13	9	9	5	6.0	5	7.5	5	14.5	5	14.5	4	6.5	5	6.5	6	8.5	5	7.5	16	5	11.5	4	14.0	0.62	0.93	0.63	0.61	0.42	0.25	0.80	0.59	0.26	0.31	129	129	140	152
	2'-5"	10	10	9	9	5	6.0	5	6.5	6	15.5	6	15.5	5	8.5	6	6.0	7	7.5	5	6.5	16	5	11.5	4	14.0	0.44	0.94	0.54	0.55	0.42	0.24	0.83	0.61	0.30	0.25	129	129	135	147
	4'-1"	10	10	9	9	5	9.0	5	7.0	5	14.5	5	14.5	4	6.0	5	6.0	6	7.0	5	11.5	16	5	11.5	4	14.0	0.39	0.94	0.44	0.46	0.47	0.24	0.40	0.59	0.25	0.23	129	129	135	147
	5'-9"	10	10	9	9	5	9.0	5	7.0	5	12.5	5	12.5	5	8.5	5	6.0	6	7.0	5	11.5	16	5	11.5	4	14.0	0.37	0.95	0.40	0.43	0.40	0.23	0.38	0.49	0.24	0.23	129	129	135	147
	7'-4"	10	11	9	9	5	8.5	5	7.0	5	12.5	5	12.5	5	8.5	5	6.0	6	8.0	5	11.5	16	5	11.5	4	14.0	0.35	0.95	0.39	0.41	0.37	0.23	0.36	0.42	0.23	0.23	129	129	136	148
HS20 MOD	0'-8"	12	13	9	9	6	7.0	5	7.0	5	12.0	5	12.0	5	8.5	6	8.0	6	7.0	5	6.0	16	5	9.0	4	14.0	0.64	0.93	0.63	0.61	0.42	0.25	0.80	0.59	0.26	0.32	129	129	140	152
	2'-4"	11	11	9	9	6	7.5	6	8.0	6	14.0	6	14.0	5	7.5	7	7.0	7	7.0	5	6.5	16	5	9.0	4	14.0	0.47	0.94	0.57	0.63	0.44	0.25	0.83	0.61	0.30	0.26	129	129	137	149
	4'-2"	9	10	9	9	5	7.0	5	6.5	6	15.5	6	15.5	5	8.5	6	7.5	6	6.0	5	9.0	16	5	11.5	4	14.0	0.42	0.95	0.46	0.48	0.48	0.23	0.43	0.61	0.27	0.23	129	129	134	146
	5'-10"	9	11	9	9	5	7.5	5	6.5	6	16.5	6	16.5	5	8.5	6	8.5	6	7.0	5	11.0	16	5	11.5	4	14.0	0.39	0.95	0.43	0.45	0.41	0.23	0.40	0.50	0.26	0.24	129	129	135	147
	7'-5"	9	11	9	9	5	7.5	5	6.0	6	16.5	6	16.5	5	8.0	5	6.0	6	7.0	5	11.5	16	5	11.5	4	14.0	0.35	0.95	0.40	0.42	0.37	0.23	0.38	0.43	0.25	0.24	129	129	135	147
HS20 MOD or HS20	9'-0"	10	12	9	9	5	8.0	5	6.0	5	13.5	5	13.5	5	9.0	5	6.5	6	8.0	5	11.5	0	5	11.5	4	14.0	0.34	0.94	0.38	0.41	0.34	0.24	0.34	0.38	0.22	0.21	129	129	137	149
	10'-8"	10	12	9	9	5	7.5	6	8.0	5	12.0	5	12.0	5	7.5	5	6.0	6	7.5	5	11.5	0	5	11.5	4	14.0	0.33	0.94	0.36	0.40	0.35	0.25	0.34	0.37	0.22	0.21	129	129	137	149
	12'-2"	11	13	10	9	5	7.5	5	6.0	5	12.5	5	12.5	5	8.0	5	6.5	6	8.0	5	11.5	0	5	11.5	4	14.0	0.32	0.94	0.36	0.39	0.32	0.24	0.33	0.37	0.22	0.22	130	129	139	151
	13'-9"	12	14	10	9	5	7.5	5	6.0	5	13.0	5	13.0	5	8.0	5	6.0	5	6.0	5	11.5	0	5	11.5	4	14.0	0.32	0.93	0.33	0.37	0.32	0.24	0.33	0.37	0.22	0.22	130	129	141	153
	15'-5"	12	14	10	9	5	7.0	6	8.0	5	12.0	5	12.0	5	7.0	6	8.5	6	8.0	5	11.5	0	5	11.5	4	14.0	0.34	0.93	0.35	0.38	0.34	0.25	0.33	0.37	0.22	0.22	130	129	141	153
	17'-0"	13	15	11	9	5	7.0	5	6.0	5	12.0	5	12.0	5	7.0	5	6.0	6	8.0	5	11.5	0	5	11.5	4	14.0	0.32	0.93	0.34	0.38	0.32	0.25	0.32	0.37	0.22	0.23	130	129	143	155
	18'-6"	14	16	11	9	5	7.0	6	8.5	5	12.5	5	12.5	5	7.0	5	6.0	6	8.5	5	11.5	0	5	11.0	4	14.0	0.32	0.92	0.34	0.38	0.34	0.26	0.32	0.37	0.22	0.23	130	129	145	157
	20'-2"	14	16	12	9	5	7.0	5	6.0	6	16.5	6	16.5	5	7.0	5	6.0	6	8.0	5	11.5	0	5	11.5	4	14.0	0.32	0.92	0.34	0.38	0.32	0.25	0.34	0.39	0.24	0.25	131	129	145	157
	21'-9"	15	17	12	9	5	7.0	6	8.5	6	16.5	6	16.5	5	7.0	5	6.0	6	8.0	5	11.5	0	5	11.0	4	14.0	0.32	0.92	0.34	0.38	0.37	0.26	0.38	0.42	0.27	0.29	131	129	147	159
	23'-3"	16	18	12	9	5	7.0	6	8.0	5	12.0	5	12.0	5	7.0	6	8.5	6	8.0	5	11.5	0	5	10.5	4	14.0	0.33	0.91	0.34	0.38	0.37	0.27	0.36	0.41	0.26	0.27	131	129	149	161
	24'-11"	16	18	13	9	5	7.0	5	6.0	6	16.0	6	16.0	5	6.5	5	6.0	6	7.5	5	11.5	0	5	11.0	4	14.0	0.32	0.91	0.33	0.37	0.36	0.26	0.37	0.42	0.27	0.29	131	129	149	161
	26'-6"	17	19	13	9	5	7.0	6	8.5	6	16.5	6	16.5	5	6.5	6	8.5	6	8.0	5	11.5	0	5	10.5	4	14.0	0.33	0.91	0.33	0.37	0.37	0.27	0.37	0.42	0.27	0.29	131	129	151	163
	28'-0"	18	20	13	9	5	6.5	6	8.0	6	15.5	6	15.5	5	6.5	6	8.5	6	8.0	5	11.5	0	5	10.0	4	14.0	0.33	0.91	0.33	0.37	0.37	0.27	0.37	0.42	0.27	0.29	131	129	153	165
	29'-8"	18	20	14	9	5	6.5	6	8.5	6	15.5	6	15.5	5	6.5	5	6.0	6	7.5	5	11.5	0	5	11.0	4	14.0	0.32	0.90	0.33	0.37	0.37	0.27	0.37	0.42	0.27	0.29	132	129	153	165
	31'-3"	19	21	14	9	5	6.5	6	8.0	6	16.0	6	16.0	5	6.5	6	8.5	6	7.5	5	11.5	0	5	10.0	4	14.0	0.34	0.90	0.33	0.37	0.37	0.28	0.37	0.42	0.27	0.29	132	129	155	167

SPAN (S) = 10 ft; HT (ft) = 12 or 13

Loading	DESIGN FILL (ft-in)	TS Thick	BS Thick.	TX Thick	TI Thick.	A1 Size	A1 Bars c to c	J3 Size	J3 Bars c to c	H1 Size	H1 Bars c to c	H2 Size	H2 Bars c to c	A2 Size	A2 Bars c to c	J4 Size	J4 Bars c to c	H3 Size	H3 Bars c to c	B1 Size	B1 Bars c to c	G1	B2 Bars Size	B2 Bars c to c	F Size	F Bars c to c	J4 C4	J4 K3	H3 C7	H3 Q10	J3 C1	J3 K2	H1 C5	H1 Q8	H2 C6	H2 Q9	"C" Multiplier S = 10 ft (in)	"Q" Multiplier S = 10 ft (in)	"K" Multiplier HT = 12 ft (in)	"K" Multiplier HT = 13 ft (in)
HS20	0'-9"	11	10	10	10	6	7.5	5	6.5	5	12.5	5	12.5	5	9.0	6	7.0	6	6.0	5	6.0	16	5	9.0	4	14.0	0.58	0.95	0.55	0.61	0.43	0.21	0.80	0.59	0.26	0.27	130	130	160	172
	2'-5"	10	11	10	10	5	6.0	5	6.0	6	15.5	6	15.5	5	8.5	7	8.0	7	7.5	5	7.0	16	5	11.0	4	14.0	0.53	0.95	0.55	0.54	0.43	0.20	0.82	0.61	0.30	0.24	130	130	160	172
	4'-1"	10	10	10	10	5	9.0	5	7.0	5	14.5	5	14.5	5	9.0	6	7.0	6	7.0	5	11.5	16	5	9.0	4	14.0	0.47	0.95	0.44	0.45	0.50	0.20	0.80	0.59	0.25	0.23	130	130	159	171
	5'-9"	10	11	10	10	4	6.0	5	6.5	5	14.5	5	14.5	5	9.0	6	8.0	6	8.0	5	11.5	16	5	10.0	4	14.0	0.45	0.95	0.42	0.43	0.48	0.20	0.38	0.47	0.24	0.23	130	130	160	172
	7'-4"	10	11	10	10	4	6.0	5	6.0	5	14.5	5	14.5	5	8.0	6	7.5	6	8.0	5	11.5	16	5	9.5	4	14.0	0.43	0.95	0.39	0.40	0.43	0.20	0.36	0.41	0.23	0.23	130	130	160	172
HS20 MOD	0'-8"	12	11	10	10	6	7.0	5	6.0	6	16.5	6	16.5	5	8.5	6	7.0	7	8.0	5	6.0	16	5	8.5	4	14.0	0.61	0.94	0.63	0.63	0.43	0.21	0.82	0.61	0.29	0.36	130	130	162	174
	2'-4"	11	11	10	10	6	7.5	6	8.0	6	14.5	6	14.5	5	7.5	7	7.5	7	7.0	5	7.0	16	5	11.0	4	14.0	0.56	0.95	0.58	0.63	0.45	0.22	0.82	0.61	0.30	0.26	130	130	161	173
	4'-2"	9	10	10	10	5	7.0	6	8.5	6	15.5	6	15.5	5	8.0	6	6.0	6	6.0	5	9.5	16	5	9.0	4	14.0	0.47	0.96	0.47	0.47	0.50	0.21	0.82	0.61	0.27	0.23	130	130	158	170
	5'-10"	9	11	10	10	5	7.5	6	8.5	6	16.5	6	16.5	5	8.0	6	7.5	6	7.0	5	11.5	16	5	10.0	4	14.0	0.45	0.96	0.44	0.44	0.49	0.21	0.40	0.48	0.26	0.24	130	130	159	171
	7'-5"	9	11	10	10	5	7.5	6	8.0	6	16.5	6	16.5	5	7.5	6	7.5	6	7.0	5	11.5	16	5	9.5	4	14.0	0.43	0.96	0.41	0.41	0.44	0.21	0.39	0.42	0.25	0.24	130	130	159	171
HS20 MOD or HS20	9'-0"	10	12	10	10	5	8.0	6	7.5	5	13.5	5	13.5	5	8.5	6	8.0	6	8.0	5	11.5	0	5	9.0	4	14.0	0.42	0.95	0.39	0.40	0.42	0.21	0.34	0.37	0.22	0.20	130	130	161	173
	10'-8"	10	12	11	10	5	7.5	6	8.5	5	12.5	5	12.5	5	7.5	6	8.5	6	7.5	5	11.5	0	5	9.0	4	14.0	0.41	0.95	0.37	0.39	0.39	0.23	0.34	0.36	0.22	0.21	131	130	161	173
	12'-2"	11	13	11	10	5	8.0	6	8.0	5	12.5	5	12.5	5	7.5	6	8.0	6	8.0	5	11.5	0	5	9.0	4	14.0	0.41	0.95	0.36	0.39	0.40	0.23	0.33	0.36	0.22	0.22	131	130	163	175
	13'-10"	11	14	12	10	5	7.5	6	8.5	6	16.5	6	16.5	5	8.0	6	8.5	5	6.0	5	11.5	0	5	9.0	4	14.0	0.40	0.95	0.34	0.36	0.40	0.23	0.35	0.38	0.24	0.24	131	130	164	176
	15'-5"	12	14	12	10	5	7.5	6	8.0	5	12.0	5	12.0	5	7.0	6	8.0	6	8.0	5	11.5	0	5	9.0	4	14.0	0.40	0.94	0.35	0.38	0.40	0.24	0.33	0.36	0.22	0.22	131	130	165	177
	17'-0"	13	15	12	10	5	7.5	6	7.0	5	12.5	5	12.5	5	7.0	6	7.0	6	8.0	5	11.5	0	5	8.5	4	14.0	0.40	0.94	0.35	0.38	0.39	0.22	0.33	0.36	0.22	0.23	131	130	167	179
	18'-6"	14	16	13	10	5	7.0	6	8.0	6	16.5	6	16.5	5	7.0	6	8.0	6	8.5	5	11.5	0	5	8.5	4	14.0	0.39	0.94	0.35	0.37	0.39	0.24	0.34	0.38	0.24	0.24	132	130	169	181
	20'-2"	14	16	13	10	5	7.0	6	7.0	6	16.5	6	16.5	5	7.0	6	7.0	6	8.0	5	11.5	0	5	8.5	4	14.0	0.39	0.93	0.34	0.37	0.39	0.24	0.34	0.38	0.24	0.25	132	130	169	181
	21'-9"	15	17	14	10	5	7.0	6	8.0	5	12.0	5	12.0	5	7.0	6	7.5	6	8.0	5	11.5	0	5	8.5	4	14.0	0.39	0.93	0.34	0.37	0.43	0.25	0.36	0.40	0.26	0.27	132	130	171	183
	23'-3"	16	18	14	10	5	7.0	6	7.0	5	12.0	5	12.0	5	7.0	6	7.0	6	8.0	5	11.5	0	5	8.0	4	14.0	0.39	0.92	0.34	0.37	0.43	0.25	0.36	0.40	0.26	0.27	132	130	173	185
	24'-11"	16	18	15	10	5	7.0	6	8.0	6	16.5	6	16.5	5	6.5	6	7.5	6	7.5	5	11.5	0	5	8.5	4	14.0	0.39	0.92	0.34	0.37	0.43	0.25	0.37	0.42	0.27	0.29	133	130	173	185
	26'-6"	17	19	15	10	5	7.0	6	7.0	6	16.5	6	16.5	5	7.0	6	7.0	6	8.0	5	11.5	0	5	7.5	4	14.0	0.39	0.92	0.34	0.37	0.43	0.25	0.37	0.42	0.27	0.29	133	130	175	187
	28'-1"	17	20	15	10	5	6.5	6	7.0	6	15.5	6	15.5	5	7.0	6	7.0	6	8.0	5	11.5	0	5	7.5	4	14.0	0.39	0.92	0.34	0.36	0.43	0.25	0.37	0.42	0.27	0.29	133	130	176	188
	29'-8"	18	20	16	10	5	7.0	6	7.0	6	16.0	6	16.0	5	6.5	6	7.0	6	7.5	5	11.5	0	5	7.5	4	14.0	0.39	0.92	0.33	0.37	0.43	0.25	0.37	0.42	0.27	0.29	133	130	177	189
	31'-3"	19	21	16	10	5	7.0	6	7.0	6	16.0	6	16.0	5	6.5	6	7.0	6	7.5	5	11.5	0	5	7.0	4	14.0	0.39	0.91	0.33	0.36	0.43	0.26	0.37	0.42	0.27	0.29	133	130	179	191

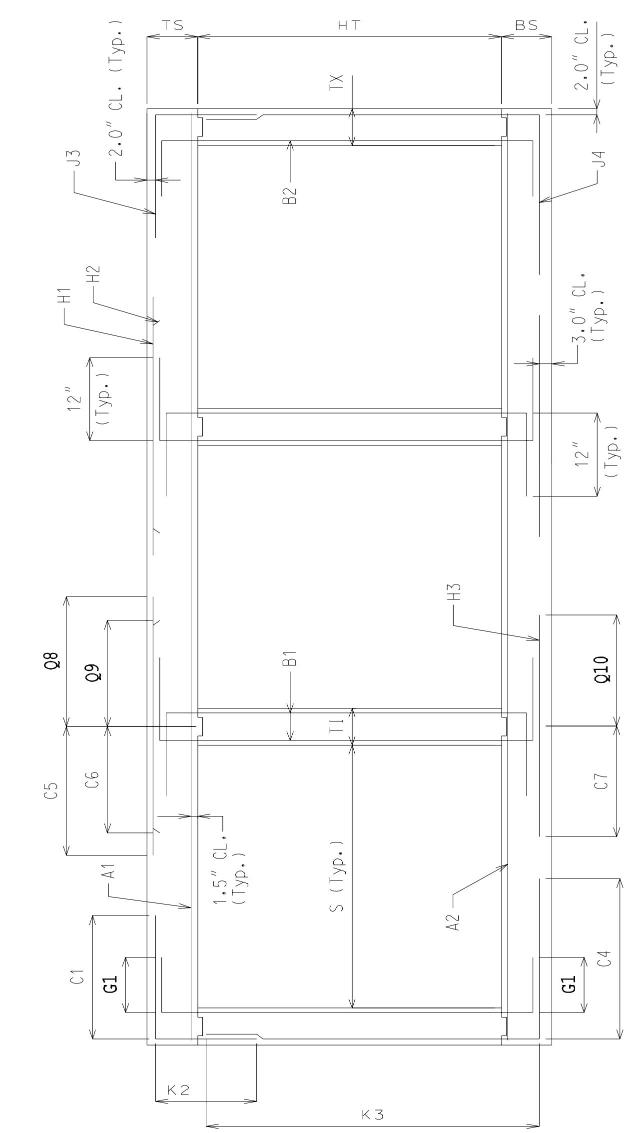

SECTION THRU BOX

NOTE: IF DESIGN FILL FALLS BETWEEN TABULATED FILLS, USE THE ADJACENT TABULATED FILL WHICH YIELDS THE GREATER MEMBER THICKNESS. IF THE MEMBER THICKNESSES ARE EQUAL, USE THE ADJACENT TABULATED FILL WHICH YIELDS THE GREATER AREA OF REINFORCEMENT.

SPECIAL DESIGNS ARE REQUIRED WHEN THE DESIGN FILL IS OUTSIDE THE RANGE OF TABULATED FILLS.

ALL DIMENSIONS ARE IN inch UNLESS OTHERWISE SPECIFIED.

COEFFICIENTS: DIMENSIONS MARKED WITH C# OR K# ARE THE PRODUCT OF THE COEFFICIENT AND ITS ASSOCIATED MULTIPLIER.

DESIGN FILL HEIGHT GIVEN IN THE TABLES IS THE HEIGHT FROM THE TOP OF THE EARTH FILL OR ROADWAY TO THE TOP OF THE TOP SLAB.

ALL CULVERTS MEET STRENGTH REQUIREMENTS FOR MILITARY 24 kips TANDEM AXLE LOADING.

MISSOURI HIGHWAY AND TRANSPORTATION COMMISSION

CONCRETE TRIPLE BOX CULVERT

MEMBER SIZES AND REINFORCEMENT

(HS20 & HS20 MOD. LOADING)

DATE: | EFFECTIVE: 04-01-2002 | 703.85B

Span (S) = 11 ft — HT (ft) = 8 or 9 or 10

Loading	DESIGN FILL (ft-in)	MEMBER THICKNESSES TS Thick	BS Thick.	TX Thick	TI Thick.	TOP SLAB BARS A1 Size	A1 Bars c to c	J3 Size	J3 Bars c to c	H1 Size	H1 Bars c to c	H2 Size	H2 Bars c to c	BOTTOM SLAB BARS A2 Size	A2 Bars c to c	J4 Size	J4 Bars c to c	H3 Size	H3 Bars c to c	WALL BARS B1 Size	B1 Bars c to c	B2 Bars G1	B2 Size	B2 c to c	F Size	F Bars c to c	COEFFICIENTS (see note) J4 C4	J4 K3	H3 C7	H3 Q10	J3 C1	J3 K2	H1 C5	H1 Q8	H2 C6	H2 Q9	"C" Multiplier S = 11 ft (in)	"Q" Multiplier S = 11 ft (in)	"K" Multiplier HT = 8 ft (in)	HT = 9 ft (in)	HT = 10 ft (in)
HS20	0'-9"	11	11	9	9	6	7.0	5	7.0	5	14.5	5	14.5	4	7.0	5	6.0	6	6.0	5	6.5	16	5	9.0	4	14.0	0.45	0.93	0.54	0.60	0.41	0.30	0.80	0.58	0.28	0.31	141	141	113	125	137
HS20	2'-4"	11	11	9	9	6	8.0	5	6.5	6	15.0	6	15.0	5	8.5	6	6.0	7	7.5	5	6.0	16	5	9.0	4	14.0	0.40	0.93	0.52	0.62	0.51	0.30	0.81	0.60	0.29	0.24	141	141	113	125	137
HS20	4'-0"	11	11	9	9	5	8.0	5	7.5	5	13.5	5	13.5	4	6.0	5	6.0	6	7.0	5	11.5	16	5	11.5	4	14.0	0.34	0.93	0.42	0.47	0.39	0.30	0.40	0.58	0.24	0.22	141	141	113	125	137
HS20	5'-8"	11	11	9	9	5	8.5	5	7.0	5	13.5	5	13.5	5	8.5	5	6.5	6	7.0	5	11.5	16	5	11.5	4	14.0	0.31	0.93	0.39	0.43	0.35	0.30	0.37	0.58	0.22	0.22	141	141	113	125	137
HS20	7'-3"	11	12	9	9	5	8.0	5	7.0	5	13.0	5	13.0	5	7.0	5	7.0	6	6.5	5	11.5	16	5	11.5	4	14.0	0.29	0.93	0.38	0.41	0.31	0.30	0.35	0.44	0.22	0.23	141	141	114	126	138
HS20 MOD	0'-8"	12	13	9	9	6	7.0	5	6.5	5	13.0	5	13.0	4	6.0	6	8.0	6	6.0	5	6.0	16	5	7.5	4	14.0	0.45	0.93	0.59	0.60	0.41	0.30	0.80	0.58	0.33	0.31	141	141	116	128	140
HS20 MOD	2'-3"	12	13	9	9	6	7.0	5	6.0	6	14.0	6	14.0	5	8.0	7	7.0	7	8.0	6	8.5	16	5	7.0	4	14.0	0.43	0.93	0.57	0.62	0.41	0.30	0.81	0.60	0.29	0.27	141	141	116	128	140
HS20 MOD	4'-1"	10	10	9	9	5	6.5	5	6.5	6	13.0	6	13.0	5	7.5	6	7.0	7	7.0	5	7.0	16	5	11.5	4	14.0	0.37	0.94	0.46	0.50	0.41	0.29	0.44	0.60	0.26	0.23	141	141	111	123	135
HS20 MOD	5'-9"	10	11	9	9	5	7.0	5	6.5	6	15.5	6	15.5	5	7.5	6	8.5	6	6.0	5	10.5	16	5	11.5	4	14.0	0.34	0.94	0.41	0.45	0.36	0.29	0.40	0.60	0.24	0.23	141	141	112	124	136
HS20 MOD	7'-4"	10	12	9	9	5	7.0	5	6.5	6	15.5	6	15.5	5	7.5	5	6.0	6	7.0	5	11.5	16	5	11.5	4	14.0	0.30	0.94	0.39	0.43	0.32	0.29	0.37	0.45	0.24	0.23	141	141	113	125	137
HS20 or HS20 MOD	9'-0"	10	12	9	9	5	6.5	5	6.0	6	15.0	6	15.0	5	7.0	5	7.0	6	6.5	5	11.5	0	5	11.5	4	14.0	0.28	0.94	0.37	0.41	0.30	0.29	0.35	0.39	0.23	0.21	141	141	113	125	137
HS20 or HS20 MOD	10'-7"	11	13	9	9	5	7.0	5	6.0	6	16.0	6	16.0	5	7.0	5	7.0	6	7.0	5	11.5	0	5	11.5	4	14.0	0.27	0.93	0.35	0.39	0.28	0.29	0.34	0.39	0.23	0.22	141	141	115	127	139
HS20 or HS20 MOD	12'-1"	12	14	9	9	5	7.0	5	6.0	6	16.5	6	16.5	5	7.0	5	6.5	6	7.5	5	11.5	0	5	11.5	4	14.0	0.27	0.93	0.34	0.39	0.27	0.29	0.34	0.39	0.23	0.23	141	141	117	129	141
HS20 or HS20 MOD	13'-8"	13	15	9	9	5	6.5	6	8.0	6	14.5	6	14.5	5	6.5	5	6.5	6	7.0	5	11.5	0	5	11.5	4	14.0	0.26	0.93	0.34	0.39	0.29	0.30	0.34	0.39	0.23	0.23	141	141	119	131	143
HS20 or HS20 MOD	15'-4"	13	15	10	9	5	6.0	5	6.0	6	15.0	6	15.0	5	6.5	5	6.5	6	7.0	5	11.5	0	5	11.5	4	14.0	0.27	0.92	0.33	0.38	0.27	0.30	0.34	0.39	0.23	0.23	142	141	119	131	143
HS20 or HS20 MOD	16'-11"	14	16	10	9	5	6.0	5	6.0	6	15.5	6	15.5	5	6.5	5	6.5	6	7.0	5	11.5	0	5	11.5	4	14.0	0.26	0.92	0.33	0.38	0.26	0.30	0.33	0.39	0.23	0.24	142	141	121	133	145
HS20 or HS20 MOD	18'-5"	15	17	10	9	5	6.5	6	8.5	6	15.5	6	15.5	5	6.5	5	6.0	6	7.5	5	11.5	0	5	11.5	4	14.0	0.26	0.91	0.33	0.38	0.31	0.30	0.36	0.42	0.26	0.27	142	141	123	135	147
HS20 or HS20 MOD	20'-0"	16	18	11	9	5	6.0	5	6.5	6	15.5	6	15.5	5	6.0	5	7.0	6	7.0	5	11.5	0	5	11.5	4	14.0	0.26	0.90	0.33	0.38	0.30	0.31	0.36	0.42	0.26	0.27	142	141	125	137	149
HS20 or HS20 MOD	21'-8"	16	18	11	9	5	6.0	5	6.0	6	14.5	6	14.5	5	6.0	5	6.0	6	7.0	5	11.5	0	5	11.5	4	14.0	0.26	0.90	0.32	0.38	0.30	0.31	0.36	0.42	0.26	0.27	142	141	125	137	149
HS20 or HS20 MOD	23'-2"	17	19	11	9	5	6.0	6	8.5	6	14.5	6	14.5	5	6.0	5	6.0	6	7.0	5	11.5	0	5	11.5	4	14.0	0.26	0.90	0.32	0.37	0.31	0.31	0.36	0.42	0.26	0.27	142	141	127	139	151
HS20 or HS20 MOD	24'-9"	18	20	12	9	5	6.0	5	6.0	6	14.5	6	14.5	5	6.0	5	6.5	6	7.0	5	11.5	0	5	11.5	4	14.0	0.26	0.89	0.32	0.37	0.30	0.31	0.36	0.42	0.26	0.27	143	141	129	141	153
HS20 or HS20 MOD	26'-5"	18	20	12	9	6	8.0	6	8.5	6	14.0	6	14.0	6	8.0	5	6.0	6	7.0	5	11.5	0	5	11.5	4	14.0	0.26	0.89	0.32	0.37	0.31	0.31	0.36	0.42	0.26	0.27	143	141	129	141	153
HS20 or HS20 MOD	27'-11"	19	21	12	9	6	8.0	6	8.5	6	14.0	6	14.0	6	8.0	5	6.0	6	7.0	5	11.5	0	5	11.5	4	14.0	0.26	0.89	0.32	0.37	0.31	0.32	0.36	0.42	0.26	0.28	143	141	131	143	155
HS20 or HS20 MOD	29'-6"	20	22	13	9	6	8.0	5	6.0	6	14.0	6	14.0	6	8.0	5	6.5	6	7.0	5	11.5	0	5	11.5	4	14.0	0.26	0.88	0.32	0.37	0.30	0.32	0.35	0.42	0.25	0.28	143	141	133	145	157
HS20 or HS20 MOD	31'-2"	20	22	13	9	6	7.5	6	8.5	6	13.5	6	13.5	6	7.5	5	6.0	6	6.5	5	11.5	0	5	11.5	4	14.0	0.26	0.88	0.32	0.37	0.31	0.32	0.35	0.42	0.25	0.27	143	141	133	145	157

SPAN (S) = 11 ft — HT (ft) = 11 or 12

Loading	DESIGN FILL (ft-in)	MEMBER THICKNESSES TS Thick	BS Thick.	TX Thick	TI Thick.	TOP SLAB BARS A1 Size	A1 Bars c to c	J3 Size	J3 Bars c to c	H1 Size	H1 Bars c to c	H2 Size	H2 Bars c to c	BOTTOM SLAB BARS A2 Size	A2 Bars c to c	J4 Size	J4 Bars c to c	H3 Size	H3 Bars c to c	WALL BARS B1 Size	B1 Bars c to c	B2 Bars G1	B2 Size	B2 c to c	F Size	F Bars c to c	COEFFICIENTS (see note) J4 C4	J4 K3	H3 C7	H3 Q10	J3 C1	J3 K2	H1 C5	H1 Q8	H2 C6	H2 Q9	"C" Multiplier S = 11 ft (in)	"Q" Multiplier S = 11 ft (in)	"K" Multiplier HT = 11 ft (in)	HT = 12 ft (in)
HS20	0'-9"	11	11	10	10	6	7.5	5	6.5	5	14.5	5	14.5	4	6.5	6	8.0	6	6.0	5	7.0	16	5	9.5	4	14.0	0.51	0.94	0.55	0.60	0.42	0.23	0.80	0.58	0.28	0.30	142	142	149	161
HS20	2'-4"	11	11	10	10	6	8.0	5	6.0	6	14.5	6	14.5	5	8.0	7	8.0	7	7.5	5	7.0	16	5	10.0	4	14.0	0.45	0.94	0.53	0.62	0.42	0.23	0.81	0.60	0.29	0.24	142	142	149	161
HS20	4'-0"	11	11	10	10	5	8.0	5	7.0	5	13.5	5	13.5	5	9.0	6	8.0	6	7.0	5	11.5	16	5	11.5	4	14.0	0.40	0.94	0.43	0.46	0.46	0.23	0.42	0.58	0.24	0.22	142	142	149	161
HS20	5'-8"	11	11	10	10	5	8.5	5	7.0	5	13.5	5	13.5	5	8.0	6	8.5	6	7.0	5	11.5	16	5	11.5	4	14.0	0.38	0.94	0.40	0.42	0.40	0.23	0.37	0.58	0.23	0.23	142	142	149	161
HS20	7'-3"	11	12	10	10	5	8.5	5	6.0	5	13.0	5	13.0	5	8.0	6	8.5	6	7.5	5	11.5	16	5	11.5	4	14.0	0.36	0.94	0.38	0.41	0.37	0.22	0.35	0.43	0.22	0.22	142	142	150	162
HS20 MOD	0'-8"	12	11	10	10	6	7.0	6	8.0	5	13.0	5	13.0	5	9.0	6	7.0	7	7.0	5	6.5	16	5	7.5	4	14.0	0.51	0.94	0.58	0.62	0.43	0.26	0.80	0.58	0.33	0.34	142	142	150	162
HS20 MOD	2'-3"	12	11	10	10	6	7.0	6	7.5	6	12.5	6	12.5	5	7.0	7	7.0	7	6.5	5	6.0	16	5	7.0	4	14.0	0.46	0.94	0.53	0.62	0.43	0.26	0.81	0.60	0.30	0.28	142	142	150	162
HS20 MOD	4'-1"	10	11	10	10	5	6.5	5	6.0	6	14.5	6	14.5	5	7.0	6	7.0	7	7.0	5	8.0	16	5	11.5	4	14.0	0.41	0.95	0.47	0.49	0.47	0.22	0.45	0.60	0.26	0.23	142	142	148	160
HS20 MOD	5'-9"	10	11	10	10	5	7.0	5	6.0	6	15.5	6	15.5	5	7.0	6	7.5	6	6.0	5	11.5	16	5	11.5	4	14.0	0.39	0.95	0.41	0.44	0.41	0.22	0.40	0.60	0.25	0.23	142	142	148	160
HS20 MOD	7'-4"	10	12	10	10	5	7.0	6	8.0	6	15.0	6	15.0	5	7.0	6	8.0	6	7.0	5	11.5	16	5	11.5	4	14.0	0.36	0.95	0.39	0.42	0.37	0.25	0.37	0.44	0.24	0.23	142	142	149	161
HS20 or HS20 MOD	9'-0"	10	13	10	10	5	6.5	6	7.5	6	15.0	6	15.0	5	7.0	5	6.0	6	6.5	5	11.5	0	5	11.5	4	14.0	0.33	0.95	0.37	0.40	0.36	0.25	0.35	0.38	0.23	0.21	142	142	150	162
HS20 or HS20 MOD	10'-7"	11	13	10	10	5	7.0	6	7.5	6	16.0	6	16.0	5	7.0	6	8.0	6	7.0	5	11.5	0	5	11.5	4	14.0	0.34	0.94	0.35	0.39	0.34	0.25	0.35	0.39	0.23	0.22	142	142	151	163
HS20 or HS20 MOD	12'-1"	12	14	10	10	5	7.0	6	7.0	6	16.5	6	16.5	5	7.0	6	7.5	6	7.5	5	11.5	0	5	11.0	4	14.0	0.33	0.94	0.35	0.38	0.33	0.24	0.34	0.38	0.23	0.23	142	142	153	165
HS20 or HS20 MOD	13'-9"	12	15	11	10	5	6.5	6	8.0	6	14.5	6	14.5	5	7.0	6	8.5	6	7.5	5	11.5	0	5	11.5	4	14.0	0.33	0.94	0.34	0.38	0.33	0.25	0.34	0.38	0.23	0.23	143	142	154	166
HS20 or HS20 MOD	15'-4"	13	15	11	10	5	6.5	6	7.5	6	15.5	6	15.5	5	6.5	6	7.5	6	7.0	5	11.5	0	5	11.0	4	14.0	0.33	0.93	0.34	0.38	0.33	0.26	0.34	0.38	0.23	0.23	143	142	155	167
HS20 or HS20 MOD	16'-11"	14	16	12	10	5	6.5	6	8.0	6	15.5	6	15.5	5	6.5	6	8.0	6	7.0	5	11.5	0	5	11.0	4	14.0	0.33	0.93	0.33	0.37	0.33	0.26	0.33	0.38	0.23	0.24	143	142	157	169
HS20 or HS20 MOD	18'-5"	15	17	12	10	5	6.5	6	8.0	6	16.0	6	16.0	5	6.5	6	8.0	6	7.0	5	11.5	0	5	10.5	4	14.0	0.33	0.92	0.33	0.37	0.36	0.26	0.36	0.41	0.26	0.27	143	142	159	171
HS20 or HS20 MOD	20'-0"	16	18	12	10	5	6.5	6	7.0	6	16.0	6	16.0	5	6.5	6	7.5	6	7.5	5	11.5	0	5	9.5	4	14.0	0.32	0.92	0.33	0.37	0.36	0.25	0.36	0.41	0.26	0.27	143	142	161	173
HS20 or HS20 MOD	21'-8"	16	18	13	10	5	6.0	6	7.5	6	14.5	6	14.5	5	6.0	6	8.0	6	7.0	5	11.5	0	5	10.5	4	14.0	0.32	0.92	0.33	0.37	0.36	0.27	0.36	0.41	0.26	0.27	144	142	161	173
HS20 or HS20 MOD	23'-2"	17	19	13	10	5	6.0	6	7.0	6	14.5	6	14.5	5	6.0	6	7.5	6	7.0	5	11.5	0	5	9.5	4	14.0	0.32	0.91	0.33	0.37	0.36	0.27	0.36	0.41	0.26	0.27	144	142	163	175
HS20 or HS20 MOD	24'-9"	18	20	14	10	5	6.0	6	8.0	6	14.5	6	14.5	5	6.0	6	8.0	6	7.0	5	11.5	0	5	10.0	4	14.0	0.33	0.91	0.32	0.37	0.36	0.27	0.36	0.41	0.26	0.27	144	142	165	177
HS20 or HS20 MOD	26'-5"	18	20	14	10	5	6.0	6	7.5	6	14.0	6	14.0	6	8.5	6	7.5	6	7.0	5	11.5	0	5	9.5	4	14.0	0.32	0.91	0.32	0.36	0.36	0.27	0.36	0.41	0.26	0.27	144	142	165	177
HS20 or HS20 MOD	27'-11"	19	21	14	10	5	6.0	6	7.0	6	14.5	6	14.5	6	8.5	6	7.0	6	7.0	5	11.5	0	5	9.0	4	14.0	0.32	0.90	0.32	0.36	0.36	0.28	0.36	0.41	0.26	0.27	144	142	167	179
HS20 or HS20 MOD	29'-6"	20	22	15	10	5	6.0	6	7.5	6	14.5	6	14.5	6	8.5	6	7.5	6	7.0	5	11.5	0	5	9.0	4	14.0	0.33	0.90	0.32	0.36	0.36	0.28	0.36	0.41	0.25	0.27	145	142	169	181
HS20 or HS20 MOD	31'-2"	20	22	15	10	6	8.0	6	7.0	6	13.5	6	13.5	6	8.0	6	7.0	6	6.5	5	11.5	0	5	9.0	4	14.0	0.32	0.90	0.32	0.36	0.36	0.28	0.35	0.41	0.25	0.27	145	142	169	181

SPAN (S) = 11 ft — HT (ft) = 13 or 14

Loading	DESIGN FILL (ft-in)	MEMBER THICKNESSES TS Thick	BS Thick.	TX Thick	TI Thick.	TOP SLAB BARS A1 Size	A1 Bars c to c	J3 Size	J3 Bars c to c	H1 Size	H1 Bars c to c	H2 Size	H2 Bars c to c	BOTTOM SLAB BARS A2 Size	A2 Bars c to c	J4 Size	J4 Bars c to c	H3 Size	H3 Bars c to c	WALL BARS B1 Size	B1 Bars c to c	B2 Bars G1	B2 Size	B2 c to c	F Size	F Bars c to c	COEFFICIENTS (see note) J4 C4	J4 K3	H3 C7	H3 Q10	J3 C1	J3 K2	H1 C5	H1 Q8	H2 C6	H2 Q9	"C" Multiplier S = 11 ft (in)	"Q" Multiplier S = 11 ft (in)	"K" Multiplier HT = 13 ft (in)	HT = 14 ft (in)
HS20	0'-9"	11	11	11	11	6	7.5	5	6.0	5	14.5	5	14.5	4	6.0	6	7.0	6	6.0	5	8.0	16	5	10.5	4	14.0	0.57	0.95	0.57	0.60	0.42	0.19	0.80	0.58	0.28	0.29	143	143	173	185
HS20	2'-4"	11	11	11	11	6	8.0	6	8.0	6	14.5	6	14.5	5	8.0	7	7.0	7	7.5	5	7.5	16	5	10.0	4	14.0	0.53	0.95	0.53	0.53	0.43	0.22	0.81	0.60	0.28	0.24	143	143	173	185
HS20	4'-0"	11	11	11	11	5	8.0	5	6.5	5	13.5	5	13.5	5	8.5	6	7.0	6	7.0	5	11.5	16	5	10.0	4	14.0	0.45	0.95	0.43	0.45	0.50	0.19	0.80	0.58	0.24	0.22	143	143	173	185
HS20	5'-8"	11	11	11	11	5	8.5	5	6.0	5	13.5	5	13.5	5	7.5	6	7.0	6	6.5	5	11.5	16	5	9.5	4	14.0	0.43	0.95	0.40	0.41	0.47	0.19	0.38	0.49	0.23	0.22	143	143	173	185
HS20	7'-3"	11	12	11	11	5	8.5	6	8.0	5	13.0	5	13.0	5	7.5	6	7.0	6	7.0	5	11.5	16	5	9.0	4	14.0	0.42	0.95	0.38	0.40	0.44	0.22	0.35	0.42	0.22	0.22	143	143	174	186
HS20 MOD	0'-8"	12	11	11	11	6	7.0	6	8.0	5	12.5	5	12.5	5	8.5	6	6.0	7	7.0	5	7.0	16	5	8.0	4	14.0	0.56	0.95	0.59	0.62	0.44	0.22	0.80	0.58	0.30	0.34	143	143	174	186
HS20 MOD	2'-3"	12	12	11	11	6	7.0	6	7.0	6	13.0	6	13.0	5	7.0	7	7.0	7	6.5	5	7.0	16	5	7.5	4	14.0	0.54	0.95	0.55	0.62	0.44	0.22	0.81	0.60	0.29	0.26	143	143	175	187
HS20 MOD	4'-1"	10	11	11	11	5	6.5	6	8.5	6	14.5	6	14.5	5	7.5	6	6.0	6	6.0	5	10.0	16	5	9.5	4	14.0	0.45	0.96	0.46	0.47	0.53	0.22	0.81	0.60	0.26	0.23	143	143	172	184
HS20 MOD	5'-9"	10	11	11	11	5	7.0	6	8.0	6	15.5	6	15.5	5	7.0	6	6.0	6	6.0	5	11.5	16	5	9.5	4	14.0	0.43	0.96	0.41	0.43	0.48	0.22	0.40	0.50	0.25	0.23	143	143	172	184
HS20 MOD	7'-4"	10	12	11	11	5	7.0	6	7.5	6	15.5	6	15.5	5	7.0	6	7.0	6	7.0	5	11.5	16	5	9.0	4	14.0	0.42	0.96	0.40	0.41	0.43	0.21	0.38	0.43	0.24	0.23	143	143	173	185
HS20 or HS20 MOD	9'-0"	10	13	11	11	5	7.0	6	7.0	6	15.0	6	15.0	5	7.5	6	7.5	6	7.5	5	11.5	0	5	8.5	4	14.0	0.41	0.96	0.38	0.40	0.41	0.21	0.35	0.38	0.23	0.21	143	143	174	186
HS20 or HS20 MOD	10'-7"	11	13	11	11	5	7.0	6	7.0	6	16.5	6	16.5	5	7.0	6	7.0	6	7.0	5	11.5	0	5	8.0	4	14.0	0.40	0.95	0.36	0.38	0.40	0.22	0.35	0.38	0.23	0.22	143	143	175	187
HS20 or HS20 MOD	12'-1"	12	14	12	11	5	7.0	6	7.5	6	16.5	6	16.5	5	7.0	6	7.0	6	7.0	5	11.5	0	5	8.5	4	14.0	0.39	0.95	0.35	0.38	0.39	0.22	0.34	0.38	0.23	0.23	144	143	177	189
HS20 or HS20 MOD	13'-9"	12	15	12	11	5	7.0	6	7.0	6	15.0	6	15.0	5	7.0	6	7.0	6	7.5	5	11.5	0	5	7.5	4	14.0	0.39	0.95	0.35	0.37	0.38	0.22	0.34	0.37	0.23	0.23	144	143	178	190
HS20 or HS20 MOD	15'-4"	13	15	13	11	5	7.0	6	7.0	6	15.5	6	15.5	5	6.5	6	7.0	6	7.0	5	11.5	0	5	8.5	4	14.0	0.38	0.94	0.34	0.37	0.38	0.22	0.34	0.37	0.23	0.23	144	143	179	191
HS20 or HS20 MOD	16'-11"	14	16	13	11	5	7.0	6	7.0	6	16.0	6	16.0	5	6.5	6	7.0	6	7.0	5	11.5	0	5	7.5	4	14.0	0.38	0.94	0.34	0.37	0.38	0.23	0.34	0.38	0.23	0.24	144	143	181	193
HS20 or HS20 MOD	18'-5"	15	17	14	11	5	7.0	6	7.0	6	16.0	6	16.0	5	6.5	6	7.0	6	7.0	5	11.5	0	5	8.0	4	14.0	0.38	0.93	0.33	0.37	0.41	0.23	0.36	0.41	0.26	0.27	145	143	183	195
HS20 or HS20 MOD	20'-0"	16	18	14	11	5	6.5	6	7.0	6	14.5	6	14.5	5	6.5	6	7.0	6	7.5	5	11.5	0	5	7.5	4	14.0	0.38	0.93	0.33	0.36	0.41	0.23	0.37	0.41	0.26	0.27	145	143	185	197
HS20 or HS20 MOD	21'-8"	16	18	15	11	5	6.5	6	7.0	6	14.5	6	14.5	5	6.0	6	7.0	6	7.0	5	11.5	0	5	7.5	4	14.0	0.37	0.93	0.33	0.36	0.41	0.23	0.36	0.41	0.26	0.27	145	143	185	197
HS20 or HS20 MOD	23'-2"	17	19	15	11	5	6.5	6	7.0	6	15.0	6	15.0	5	6.0	6	7.0	6	7.0	5	11.5	0	5	7.0	4	14.0	0.37	0.92	0.33	0.36	0.41	0.24	0.36	0.41	0.26	0.27	145	143	187	199
HS20 or HS20 MOD	24'-9"	18	20	16	11	5	6.5	6	7.0	6	15.0	6	15.0	5	6.0	6	7.0	6	7.0	5	11.5	0	5	7.5	4	14.0	0.37	0.92	0.33	0.36	0.41	0.24	0.36	0.41	0.26	0.27	146	143	189	201
HS20 or HS20 MOD	26'-5"	18	21	16	11	5	6.0	6	7.0	6	14.5	6	14.5	6	8.5	6	7.0	6	7.0	5	11.5	0	5	7.0	4	14.0	0.37	0.92	0.33	0.36	0.41	0.24	0.36	0.40	0.26	0.27	146	143	190	202
HS20 or HS20 MOD	27'-11"	19	21	17	11	5	6.0	6	7.0	6	14.5	6	14.5	6	8.5	6	7.0	6	7.0	5	11.5	0	5	7.5	4	14.0	0.37	0.92	0.32	0.36	0.41	0.24	0.36	0.40	0.26	0.27	146	143	191	203
HS20 or HS20 MOD	29'-6"	20	22	17	11	5	6.0	6	7.0	6	14.5	6	14.5	6	8.5	6	7.0	6	7.0	5	11.5	0	5	7.0	4	14.0	0.37	0.91	0.32	0.36	0.41	0.24	0.35	0.40	0.26	0.27	146	143	193	205
HS20 or HS20 MOD	31'-2"	20	23	18	11	6	8.5	6	7.0	6	14.0	6	14.0	6	8.0	6	7.0	6	6.5	5	11.5	0	5	7.0	4	14.0	0.37	0.91	0.32	0.36	0.41	0.24	0.35	0.40	0.25	0.27	147	143	194	206

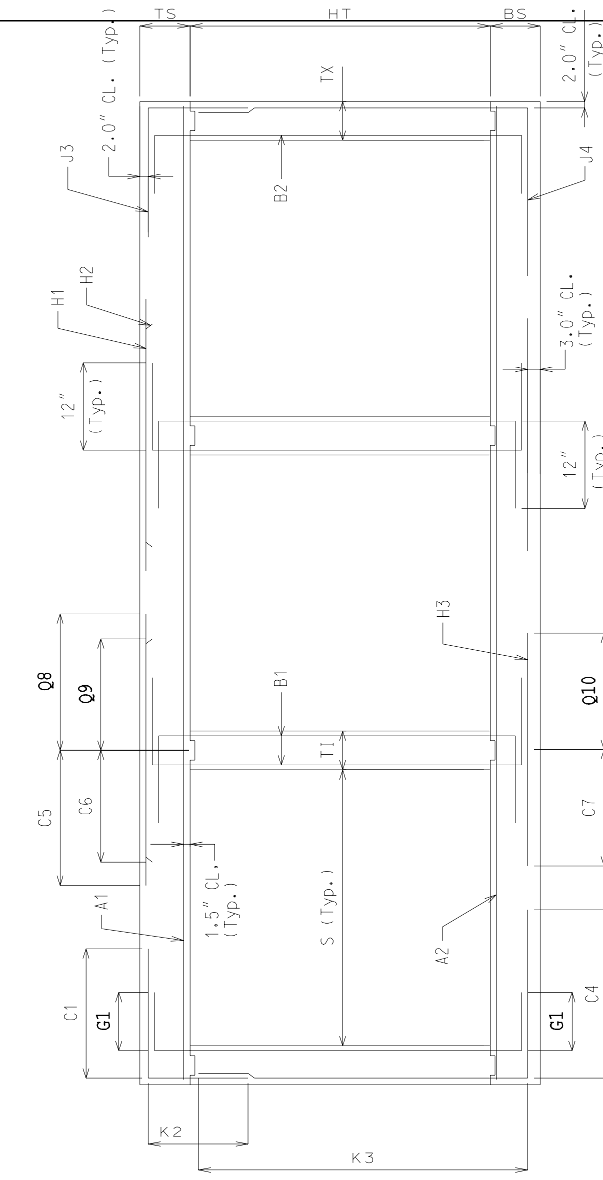

SECTION THRU BOX

NOTE: IF DESIGN FILL FALLS BETWEEN TABULATED FILLS, USE THE ADJACENT TABULATED FILL WHICH YIELDS THE GREATER MEMBER THICKNESS. IF THE MEMBER THICKNESSES ARE EQUAL, USE THE ADJACENT TABULATED FILL WHICH YIELDS THE GREATER AREA OF REINFORCEMENT.

SPECIAL DESIGNS ARE REQUIRED WHEN THE DESIGN FILL IS OUTSIDE THE RANGE OF TABULATED FILLS.

ALL DIMENSIONS ARE IN inch UNLESS OTHERWISE SPECIFIED.

COEFFICIENTS: DIMENSIONS MARKED WITH C# OR K# ARE THE PRODUCT OF THE COEFFICIENT AND ITS ASSOCIATED MULTIPLIER.

DESIGN FILL HEIGHT GIVEN IN THE TABLES IS THE HEIGHT FROM THE TOP OF THE EARTH FILL OR ROADWAY TO THE TOP OF THE TOP SLAB.

ALL CULVERTS MEET STRENGTH REQUIREMENTS FOR MILITARY 24 kips TANDEM AXLE LOADING.

MISSOURI HIGHWAY AND TRANSPORTATION COMMISSION

CONCRETE TRIPLE BOX CULVERT

MEMBER SIZES AND REINFORCEMENT

(HS20 & HS20 MOD. LOADING)

DATE:

EFFECTIVE: 04-01-2002

703.85B

	DESIGN FILL	MEMBER THICKNESSES				Span (S) = 12 ft; HT (ft) = 9 or 10 or 11																																							
						TOP SLAB BARS								BOTTOM SLAB BARS						WALL BARS							COEFFICIENTS (see note)										"C" Multiplier	"Q" Multiplier	"K" Multiplier		
		TS	BS	TX	TI	A1	Bars	J3	Bars	H1	Bars	H2	Bars	A2	Bars	J4	Bars	H3	Bars	B1	Bars	B2 Bars			F	Bars	J4		H3		J3		H1		H2		S = 12 ft	S = 12 ft	HT = 9 ft	HT = 10 ft	HT = 11 ft
	(ft-in)	Thick	Thick.	Thick	Thick.	Size	c to c	Size	c to c	Size	c to c	Size	c to c	Size	c to c	Size	c to c	Size	c to c	Size	c to c	G1	Size	c to c	Size	c to c	C4	K3	C7	Q10	C1	K2	C5	Q8	C6	Q9	in	in	in	in	in
HS20	0'-9"	11	11	9	9	6	7.0	5	6.0	5	12.5	5	12.5	4	6.0	6	7.0	7	7.0	5	6.0	16	5	9.0	4	14.0	0.46	0.94	0.55	0.61	0.40	0.27	0.79	0.58	0.26	0.26	153	153	125	137	149
	2'-4"	11	12	9	9	6	7.0	6	8.0	6	13.5	6	13.5	5	7.5	6	6.0	7	7.0	5	6.0	16	5	11.5	4	14.0	0.38	0.94	0.53	0.61	0.50	0.27	0.81	0.59	0.26	0.23	153	153	126	138	150
	4'-0"	11	11	9	9	5	7.0	5	6.5	6	16.5	6	16.5	5	8.0	6	7.0	6	6.0	5	10.5	16	5	11.5	4	14.0	0.35	0.94	0.41	0.45	0.39	0.27	0.42	0.59	0.25	0.23	153	153	125	137	149
	5'-8"	11	11	9	9	5	7.0	5	6.0	6	16.5	6	16.5	5	7.0	6	7.5	7	7.5	5	11.5	16	5	11.5	4	14.0	0.32	0.94	0.41	0.44	0.34	0.27	0.38	0.50	0.23	0.23	153	153	125	137	149
	7'-3"	11	12	9	9	5	7.0	6	8.5	6	15.5	6	15.5	5	7.0	6	8.0	6	6.0	5	11.5	16	5	11.5	4	14.0	0.30	0.94	0.37	0.40	0.33	0.27	0.36	0.43	0.23	0.23	153	153	126	138	150
HS20 MOD	0'-8"	12	13	9	9	6	6.5	6	8.0	5	12.0	5	12.0	5	8.5	6	7.0	7	7.5	6	8.0	16	5	7.5	4	14.0	0.45	0.93	0.61	0.61	0.42	0.27	0.79	0.58	0.31	0.26	153	153	128	140	152
	2'-3"	12	13	9	9	6	6.5	6	7.0	6	12.5	6	12.5	5	7.0	7	7.0	7	7.0	6	8.0	16	5	11.0	4	14.0	0.41	0.93	0.56	0.61	0.42	0.30	0.81	0.59	0.27	0.26	153	153	128	140	152
	4'-1"	10	11	9	9	6	8.0	6	8.0	6	12.5	6	12.5	5	7.0	6	7.0	7	7.0	5	7.5	16	5	11.5	4	14.0	0.35	0.94	0.46	0.49	0.42	0.26	0.43	0.59	0.24	0.22	153	153	124	136	148
	5'-9"	10	12	9	9	5	6.0	6	8.0	6	12.5	6	12.5	5	7.0	6	7.0	7	7.0	5	9.0	16	5	11.5	4	14.0	0.32	0.94	0.43	0.47	0.37	0.26	0.39	0.49	0.23	0.22	153	153	125	137	149
	7'-3"	11	12	9	9	5	6.0	6	7.5	6	12.5	6	12.5	5	6.5	6	7.0	7	7.5	5	11.5	16	5	11.5	4	14.0	0.31	0.94	0.40	0.44	0.33	0.27	0.37	0.46	0.23	0.23	153	153	126	138	150
HS20 or HS20 MOD	8'-11"	11	13	9	9	5	6.0	6	7.0	6	14.5	6	14.5	5	7.0	6	8.5	6	6.0	5	11.5	0	5	11.5	4	14.0	0.29	0.94	0.36	0.40	0.31	0.27	0.34	0.38	0.22	0.21	153	153	127	139	151
	10'-6"	12	14	9	9	5	6.0	6	7.0	6	15.0	6	15.0	5	6.5	6	8.0	6	6.5	5	11.5	0	5	11.5	4	14.0	0.28	0.93	0.35	0.39	0.29	0.28	0.33	0.38	0.22	0.22	153	153	129	141	153
	12'-0"	13	15	10	9	5	6.0	6	8.0	6	15.0	6	15.0	5	6.5	5	6.0	6	7.0	5	11.5	0	5	11.5	4	14.0	0.27	0.93	0.33	0.38	0.29	0.28	0.33	0.38	0.22	0.22	154	153	131	143	155
	13'-8"	13	16	10	9	6	8.5	6	7.5	6	13.5	6	13.5	5	6.0	6	8.5	6	6.5	5	11.5	0	5	11.5	4	14.0	0.28	0.93	0.33	0.37	0.28	0.28	0.33	0.38	0.22	0.22	154	153	132	144	156
	15'-3"	14	16	10	9	6	8.5	6	7.0	6	14.0	6	14.0	6	8.5	6	8.0	6	6.5	5	11.5	0	5	11.5	4	14.0	0.27	0.92	0.33	0.37	0.28	0.28	0.33	0.38	0.22	0.23	154	153	133	145	157
	16'-10"	15	17	11	9	6	8.0	6	8.0	6	14.0	6	14.0	6	8.5	6	8.5	6	6.5	5	11.5	0	5	11.5	4	14.0	0.28	0.92	0.32	0.37	0.31	0.29	0.35	0.41	0.25	0.26	154	153	135	147	159
	18'-4"	16	18	11	9	6	8.0	6	7.5	6	14.0	6	14.0	6	8.5	6	8.0	6	6.5	5	11.5	0	5	11.5	4	14.0	0.27	0.91	0.32	0.37	0.30	0.31	0.35	0.41	0.25	0.26	154	153	137	149	161
	19'-11"	17	19	12	9	6	8.0	6	8.5	6	14.0	6	14.0	6	8.5	5	6.0	6	6.5	5	11.5	0	5	11.5	4	14.0	0.26	0.91	0.32	0.37	0.31	0.28	0.35	0.41	0.25	0.26	155	153	139	151	163
	21'-6"	18	20	12	9	6	8.0	6	8.0	6	14.0	6	14.0	6	8.0	6	8.5	6	7.0	5	11.5	0	5	11.5	4	14.0	0.27	0.90	0.32	0.37	0.31	0.29	0.35	0.41	0.24	0.26	155	153	141	153	165
	23'-1"	18	20	12	9	6	7.5	6	7.5	6	13.0	6	13.0	6	7.5	6	8.0	6	6.5	5	11.5	0	5	11.5	4	14.0	0.27	0.90	0.31	0.37	0.30	0.29	0.35	0.41	0.24	0.26	155	153	141	153	165
	24'-8"	19	21	13	9	6	7.5	6	8.0	6	13.0	6	13.0	6	7.5	6	8.5	6	6.5	5	11.5	0	5	11.5	4	14.0	0.27	0.90	0.31	0.36	0.31	0.29	0.35	0.41	0.24	0.26	155	153	143	155	167
	26'-3"	20	22	13	9	6	7.5	6	8.0	6	13.0	6	13.0	6	7.5	6	8.0	6	6.5	5	11.5	0	5	11.0	4	14.0	0.27	0.89	0.31	0.36	0.31	0.30	0.35	0.41	0.24	0.26	155	153	145	157	169
	27'-9"	21	23	13	9	6	7.5	6	7.5	6	13.0	6	13.0	6	7.5	6	8.0	6	6.5	5	11.5	0	5	10.5	4	14.0	0.27	0.89	0.31	0.36	0.30	0.30	0.34	0.41	0.24	0.26	155	153	147	159	171
	29'-5"	21	23	14	9	6	7.0	6	8.0	6	12.5	6	12.5	6	7.0	6	8.0	6	6.0	5	11.5	0	5	11.5	4	14.0	0.28	0.89	0.31	0.36	0.31	0.30	0.34	0.40	0.24	0.26	156	153	147	159	171
	31'-0"	22	24	14	9	6	7.0	6	8.0	6	12.5	6	12.5	6	7.0	6	8.0	6	6.0	5	11.5	0	5	11.0	4	14.0	0.27	0.88	0.31	0.36	0.31	0.30	0.34	0.40	0.24	0.26	156	153	149	161	173

	DESIGN FILL	MEMBER THICKNESSES				SPAN (S) = 12 ft; HT (ft) = 12 or 13																																						
						TOP SLAB BARS								BOTTOM SLAB BARS						WALL BARS							COEFFICIENTS (see note)										"C" Multiplier	"Q" Multiplier	"K" Multiplier	
		TS	BS	TX	TI	A1	Bars	J3	Bars	H1	Bars	H2	Bars	A2	Bars	J4	Bars	H3	Bars	B1	Bars	B2 Bars			F	Bars	J4		H3		J3		H1		H2		S = 12 ft	S = 12 ft	HT = 12 ft	HT = 13 ft
	(ft-in)	Thick	Thick.	Thick	Thick.	Size	c to c	Size	c to c	Size	c to c	Size	c to c	Size	c to c	Size	c to c	Size	c to c	Size	c to c	G1	Size	c to c	Size	c to c	C4	K3	C7	Q10	C1	K2	C5	Q8	C6	Q9	in	in	in	in
HS20	0'-9"	11	11	10	10	6	7.0	6	8.5	5	12.5	5	12.5	5	9.0	6	7.0	7	7.0	5	7.0	16	5	9.5	4	14.0	0.51	0.95	0.56	0.61	0.42	0.22	0.79	0.58	0.26	0.27	154	154	161	173
	2'-4"	11	11	10	10	6	7.0	6	7.5	6	13.5	6	13.5	5	7.0	6	6.0	7	6.5	5	6.5	16	5	11.0	4	14.0	0.42	0.95	0.51	0.52	0.42	0.24	0.80	0.59	0.26	0.23	154	154	161	173
	4'-0"	11	11	10	10	5	7.0	5	6.0	6	16.5	6	16.5	5	7.5	6	7.0	7	8.0	5	11.5	16	5	11.5	4	14.0	0.39	0.95	0.44	0.46	0.46	0.21	0.43	0.59	0.24	0.23	154	154	161	173
	5'-8"	11	12	10	10	5	7.0	6	8.0	6	16.5	6	16.5	5	7.0	6	7.0	6	6.5	5	11.5	16	5	11.5	4	14.0	0.37	0.95	0.39	0.42	0.41	0.22	0.38	0.48	0.23	0.22	154	154	162	174
	7'-3"	11	12	10	10	5	7.0	6	7.5	6	15.5	6	15.5	5	6.5	6	7.0	6	6.0	5	11.5	16	5	11.0	4	14.0	0.35	0.95	0.37	0.39	0.38	0.22	0.36	0.42	0.23	0.23	154	154	162	174
HS20 MOD	0'-8"	12	11	10	10	6	6.5	6	7.0	6	16.5	6	16.5	5	8.0	6	6.0	7	6.5	5	6.0	16	5	7.5	4	14.0	0.50	0.94	0.55	0.61	0.42	0.24	0.80	0.59	0.30	0.30	154	154	162	174
	2'-3"	12	12	10	10	6	6.5	6	7.0	6	12.5	6	12.5	5	6.5	7	7.0	7	6.5	5	6.0	16	5	11.0	4	14.0	0.45	0.94	0.53	0.61	0.42	0.24	0.80	0.59	0.27	0.26	154	154	163	175
	4'-1"	10	11	10	10	6	8.5	6	7.5	6	12.5	6	12.5	5	7.0	6	6.5	7	7.0	5	8.5	16	5	11.0	4	14.0	0.40	0.95	0.47	0.48	0.48	0.23	0.43	0.59	0.25	0.22	154	154	160	172
	5'-9"	10	12	10	10	5	6.0	6	7.5	6	12.5	6	12.5	5	7.0	6	6.5	7	7.5	5	10.5	16	5	11.0	4	14.0	0.38	0.95	0.44	0.46	0.42	0.23	0.39	0.47	0.23	0.21	154	154	161	173
	7'-3"	11	13	10	10	5	6.5	6	7.0	6	14.5	6	14.5	5	7.0	6	7.0	6	6.5	5	11.5	16	5	11.0	4	14.0	0.36	0.95	0.39	0.41	0.38	0.23	0.37	0.44	0.23	0.22	154	154	163	175
HS20 or HS20 MOD	8'-11"	11	13	10	10	5	6.0	6	7.0	6	14.5	6	14.5	5	6.5	6	7.0	6	6.0	5	11.5	0	5	10.0	4	14.0	0.34	0.95	0.37	0.39	0.36	0.23	0.34	0.38	0.22	0.20	154	154	163	175
	10'-6"	12	14	11	10	5	6.5	6	7.0	6	15.0	6	15.0	5	6.5	6	7.5	6	6.5	5	11.5	0	5	11.0	4	14.0	0.33	0.94	0.35	0.38	0.34	0.24	0.34	0.38	0.22	0.21	155	154	165	177
	12'-0"	13	15	11	10	5	6.5	6	7.0	6	15.0	6	15.0	5	6.5	6	7.0	6	7.0	5	11.5	0	5	10.0	4	14.0	0.33	0.94	0.34	0.37	0.33	0.24	0.33	0.38	0.22	0.22	155	154	167	179
	13'-8"	13	16	12	10	5	6.0	6	7.5	6	13.5	6	13.5	5	6.5	6	7.5	6	7.0	5	11.5	0	5	11.0	4	14.0	0.32	0.94	0.33	0.37	0.32	0.24	0.33	0.37	0.22	0.22	155	154	168	180
	15'-3"	14	16	12	10	5	6.0	6	7.0	6	14.0	6	14.0	6	8.5	6	7.0	6	6.5	5	11.5	0	5	10.0	4	14.0	0.32	0.93	0.33	0.36	0.32	0.24	0.33	0.37	0.22	0.22	155	154	169	181
	16'-10"	15	17	12	10	5	6.0	6	7.0	6	14.0	6	14.0	6	8.5	6	7.0	6	6.5	5	11.5	0	5	9.0	4	14.0	0.32	0.93	0.33	0.36	0.35	0.25	0.35	0.40	0.25	0.26	155	154	171	183
	18'-4"	16	18	13	10	5	6.0	6	7.0	6	14.5	6	14.5	6	8.5	6	7.0	6	6.5	5	11.5	0	5	9.5	4	14.0	0.32	0.92	0.32	0.36	0.35	0.25	0.35	0.40	0.25	0.26	156	154	173	185
	19'-11"	17	19	13	10	5	6.0	6	7.0	6	14.5	6	14.5	6	8.5	6	7.0	6	6.5	5	11.5	0	5	9.0	4	14.0	0.32	0.92	0.32	0.36	0.35	0.25	0.35	0.40	0.25	0.26	156	154	175	187
	21'-6"	18	20	14	10	5	6.0	6	7.0	6	14.5	6	14.5	6	8.5	6	7.0	6	6.5	5	11.5	0	5	9.0	4	14.0	0.32	0.92	0.32	0.36	0.35	0.25	0.35	0.40	0.25	0.26	156	154	177	189
	23'-1"	18	20	14	10	6	8.0	6	7.0	6	13.0	6	13.0	6	7.5	6	7.0	6	6.0	5	11.5	0	5	9.0	4	14.0	0.32	0.92	0.32	0.36	0.35	0.25	0.35	0.40	0.25	0.26	156	154	177	189
	24'-8"	19	21	15	10	6	8.0	6	7.0	6	13.0	6	13.0	6	7.5	6	7.0	6	6.0	5	11.5	0	5	9.0	4	14.0	0.32	0.91	0.31	0.36	0.35	0.26	0.35	0.40	0.24	0.26	157	154	179	191
	26'-3"	20	22	15	10	6	8.0	6	7.0	6	13.0	6	13.0	6	7.5	6	7.0	6	6.5	5	11.5	0	5	9.0	4	14.0	0.32	0.91	0.31	0.36	0.35	0.26	0.34	0.40	0.24	0.26	157	154	181	193
	27'-9"	21	23	16	10	6	8.0	6	7.0	6	13.0	6	13.0	6	7.5	6	7.0	6	6.5	5	11.5	0	5	9.0	4	14.0	0.32	0.90	0.31	0.35	0.35	0.26	0.34	0.40	0.24	0.26	157	154	183	195
	29'-5"	21	24	16	10	6	7.5	6	7.0	6	12.5	6	12.5	6	7.0	6	7.0	6	6.0	5	11.5	0	5	8.5	4	14.0	0.32	0.90	0.31	0.35	0.35	0.26	0.34	0.40	0.24	0.26	157	154	184	196
	31'-0"	22	24	16	10	6	7.5	6	7.0	6	12.5	6	12.5	6	7.0	6	7.0	6	6.0	5	11.5	0	5	8.0	4	14.0	0.32	0.90	0.31	0.35	0.35	0.27	0.34	0.40	0.24	0.26	157	154	185	197

	DESIGN FILL	MEMBER THICKNESSES				SPAN (S) = 12 ft; HT (ft) = 14 or 15																																						
						TOP SLAB BARS								BOTTOM SLAB BARS						WALL BARS							COEFFICIENTS (see note)										"C" Multiplier	"Q" Multiplier	"K" Multiplier	
		TS	BS	TX	TI	A1	Bars	J3	Bars	H1	Bars	H2	Bars	A2	Bars	J4	Bars	H3	Bars	B1	Bars	B2 Bars			F	Bars	J4		H3		J3		H1		H2		S = 12 ft	S = 12 ft	HT = 14 ft	HT = 15 ft
	(ft-in)	Thick	Thick.	Thick	Thick.	Size	c to c	Size	c to c	Size	c to c	Size	c to c	Size	c to c	Size	c to c	Size	c to c	Size	c to c	G1	Size	c to c	Size	c to c	C4	K3	C7	Q10	C1	K2	C5	Q8	C6	Q9	in	in	in	in
HS20	0'-9"	11	11	11	11	6	7.0	6	8.0	5	12.5	5	12.5	5	8.5	7	8.0	7	7.0	5	7.0	16	5	9.0	4	14.0	0.59	0.95	0.58	0.61	0.43	0.19	0.79	0.58	0.26	0.26	155	155	185	197
	2'-4"	11	11	11	11	6	7.0	6	7.0	6	13.0	6	13.0	5	7.0	7	6.5	7	6.5	5	7.0	16	5	8.5	4	14.0	0.51	0.95	0.51	0.51	0.43	0.21	0.80	0.59	0.27	0.23	155	155	185	197
	4'-0"	11	12	11	11	5	7.0	6	8.0	6	16.5	6	16.5	5	7.5	6	6.0	7	8.0	5	11.5	16	5	9.0	4	14.0	0.46	0.95	0.44	0.45	0.48	0.19	0.80	0.59	0.25	0.22	155	155	186	198
	5'-8"	11	12	11	11	5	7.0	6	7.5	6	16.5	6	16.5	5	7.0	6	6.5	6	6.5	5	11.5	16	5	8.5	4	14.0	0.42	0.95	0.40	0.41	0.48	0.20	0.38	0.47	0.24	0.22	155	155	186	198
	7'-3"	11	13	11	11	5	7.0	6	7.0	6	15.5	6	15.5	5	7.0	6	6.0	6	7.0	5	11.5	16	5	7.5	4	14.0	0.41	0.95	0.38	0.39	0.43	0.20	0.36	0.41	0.23	0.22	155	155	187	199
HS20 MOD	0'-7"	13	11	11	11	6	6.5	6	7.0	5	13.0	5	13.0	5	7.5	7	7.0	7	6.5	5	7.0	16	5	7.5	4	14.0	0.58	0.94	0.53	0.61	0.43	0.21	0.79	0.58	0.32	0.33	155	155	187	199
	2'-3"	12	12	11	11	6	6.5	6	6.5	6	12.5	6	12.5	5	6.5	7	7.0	7	6.0	5	6.5	16	5	9.0	4	14.0	0.53	0.95	0.54	0.61	0.43	0.21	0.80	0.59	0.27	0.26	155	155	187	199
	4'-1"	10	11	11	11	6	8.5	6	7.0	6	12.5	6	12.5	5	6.5	7	7.0	7	7.0	5	9.0	16	5	8.0	4	14.0	0.47	0.96	0.47	0.47	0.50	0.20	0.80	0.59	0.25	0.21	155	155	184	196
	5'-9"	10	12	11	11	5	6.0	6	7.0	6	12.5	6	12.5	5	6.5	6	6.0	7	7.5	5	11.0	16	5	7.5	4	14.0	0.42	0.96	0.45	0.45	0.47	0.20	0.38	0.46	0.24	0.21	155	155	185	197
	7'-3"	11	13	11	11	5	6.5	6	7.0	6	14.5	6	14.5	5	6.5	6	6.0	6	6.5	5	11.5	16	5	7.5	4	14.0	0.41	0.95	0.39	0.40	0.44	0.20	0.37	0.43	0.23	0.22	155	155	187	199
HS20 or HS20 MOD	8'-11"	11	13	12	11	5	6.5	6	7.0	6	14.5	6	14.5	5	6.5	6	7.0	6	6.0	5	11.5	0	5	8.0	4	14.0	0.39	0.95	0.37	0.39	0.40	0.20	0.34	0.37	0.22	0.20	156	155	187	199
	10'-6"	12	14	12	11	5	6.5	6	6.5	6	15.0	6	15.0	5	6.5	6	7.0	6	6.5	5	11.5	0	5	7.5	4	14.0	0.39	0.95	0.35	0.38	0.39	0.21	0.34	0.37	0.22	0.21	156	155	189	201
	12'-1"	12	15	13	11	5	6.0	6	7.0	6	13.5	6	13.5	5	6.5	6	7.0	6	6.5	5	11.5	0	5	7.5	4	14.0	0.38	0.95	0.34	0.37	0.38	0.21	0.34	0.36	0.22	0.21	156	155	190	202
	13'-8"	13	16	13	11	5	6.0	6	7.0	6	14.0	6	14.0	5	6.5	6	6.5	6	7.0	5	11.5	0	5	7.0	4	14.0	0.38	0.95	0.34	0.36	0.37	0.21	0.33	0.36	0.22	0.22	156	155	192	204
	15'-3"	14	17	14	11	5	6.0	6	7.0	6	14.0	6	14.0	5	6.0	6	7.0	6	7.0	5	11.5	0	5	7.5	4	14.0	0.37	0.94	0.33	0.36	0.37	0.21	0.33	0.36	0.22	0.22	157	155	194	206
	16'-10"	15	17	14	11	5	6.0	6	6.5	6	14.5	6	14.5	6	8.5	6	6.5	6	6.5	5	11.5	0	5	7.0	4	14.0	0.37	0.94	0.33	0.36	0.40	0.22	0.36	0.40	0.25	0.26	157	155	195	207
	18'-4"	16	18	15	11	5	6.0	6	7.0	6	14.5	6	14.5	6	8.5	6	6.5	6	6.5	5	11.5	0	5	7.5	4	14.0	0.37	0.93	0.33	0.36	0.40	0.22	0.35	0.40	0.25	0.26	157	155	197	209
	19'-11"	17	19	15	11	6	8.5	6	6.5	6	13.0	6	13.0	6	8.5	6	6.0	6	6.5	5	11.5	0	5	7.0	4	14.0	0.36	0.93	0.32	0.35	0.39	0.22	0.35	0.40	0.25	0.26	157	155	199	211
	21'-7"	17	20	16	11	6	8.5	6	6.5	6	13.0	6	13.0	6	8.5	6	6.5	6	6.5	5	11.5	0	5	7.0	4	14.0	0.36	0.93	0.32	0.35	0.39	0.22	0.35	0.40	0.25	0.26	158	155	200	212
	23'-1"	18	21	16	11	6	8.5	6	6.0	6	13.5	6	13.5	6	8.0	6	6.0	6	7.0	5	11.5	0	5	7.0	4	14.0	0.36	0.93	0.32	0.35	0.39	0.22	0.35	0.40	0.25	0.26	158	155	202	214
	24'-8"	19	21	17	11	6	8.5	6	6.5	6	13.5	6	13.5	6	8.0	6	6.5	6	6.0	5	11.5	0	5	7.0	4	14.0	0.36	0.92	0.32	0.35	0.39	0.23	0.35	0.39	0.24	0.26	158	155	203	215
	26'-3"	20	22	17	11	6	8.0	6	6.0	6	12.5	6	12.5	6	7.5	6	6.0	6	6.5	5	11.5	0	5	7.0	4	14.0	0.36	0.92	0.32	0.35	0.39	0.23	0.35	0.39	0.25	0.26	158	155	205	217
	27'-9"	21	23	18	11	6	8.0	6	6.5	6	12.5	6	12.5	6	7.5	6	6.5	6	6.5	5	11.5	0	5	7.0	4	14.0	0.36	0.92	0.32	0.35	0.39	0.23	0.35	0.39	0.24	0.26	159	155	207	219
	29'-5"	21	24	18	11	6	8.0	6	6.0	6	12.5	6	12.5	6	7.5	6	6.0	6	6.5	5	11.5	0	5	7.0	4	14.0	0.36	0.91	0.31	0.35	0.39	0.23	0.34	0.39	0.24	0.26	159	155	208	220
	31'-0"	22	24	19	11	6	7.5	6	6.0	6	12.5	6	12.5	6	7.0	6	6.0	6	6.0	5	11.5	0	5	7.0	4	14.0	0.36	0.91	0.31	0.35	0.39	0.24	0.34	0.39	0.24	0.26	159	155	209	221

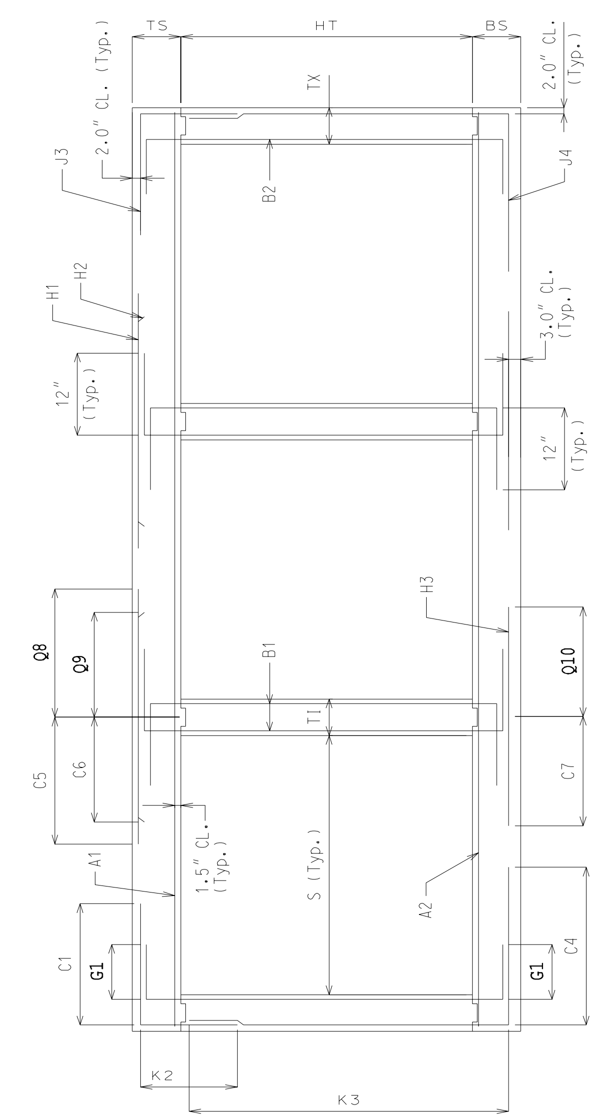

SECTION THRU BOX

NOTE: IF DESIGN FILL FALLS BETWEEN TABULATED FILLS, USE THE ADJACENT TABULATED FILL WHICH YIELDS THE GREATER MEMBER THICKNESS. IF THE MEMBER THICKNESSES ARE EQUAL, USE THE ADJACENT TABULATED FILL WHICH YIELDS THE GREATER AREA OF REINFORCEMENT.

SPECIAL DESIGNS ARE REQUIRED WHEN THE DESIGN FILL IS OUTSIDE THE RANGE OF TABULATED FILLS.

ALL DIMENSIONS ARE IN inch UNLESS OTHERWISE SPECIFIED.

COEFFICIENTS: DIMENSIONS MARKED WITH C# OR K# ARE THE PRODUCT OF THE COEFFICIENT AND ITS ASSOCIATED MULTIPLIER.

DESIGN FILL HEIGHT GIVEN IN THE TABLES IS THE HEIGHT FROM THE TOP OF THE EARTH FILL OR ROADWAY TO THE TOP OF THE TOP SLAB.

ALL CULVERTS MEET STRENGTH REQUIREMENTS FOR MILITARY 24 kips TANDEM AXLE LOADING.

MISSOURI HIGHWAY AND TRANSPORTATION COMMISSION

CONCRETE TRIPLE BOX CULVERT

MEMBER SIZES AND REINFORCEMENT

(HS20 & HS20 MOD. LOADING)

DATE:

EFFECTIVE: 04-01-2002

703.85B

Loading	DESIGN FILL (ft-in)	TS Thick	BS Thick.	TX Thick	TI Thick.	A1 Size	A1 Bars c to c	J3 Size	J3 Bars c to c	H1 Size	H1 Bars c to c	H2 Size	H2 Bars c to c	A2 Size	A2 Bars c to c	J4 Size	J4 Bars c to c	H3 Size	H3 Bars c to c	B1 Size	B1 Bars c to c	B2 Bars G1	B2 Size	B2 c to c	F Size	F Bars c to c	J4 C4	J4 K3	H3 C7	H3 Q10	J3 C1	J3 K2	H1 C5	H1 Q8	H2 C6	H2 Q9	"C" Multiplier S = 13 ft (in)	"Q" Multiplier S = 13 ft (in)	"K" Multiplier HT = 10 ft (in)	"K" Multiplier HT = 11 ft (in)	"K" Multiplier HT = 12 ft (in)
Span (S) = 13 ft; HT (ft) = 10 or 11 or 12																																									
HS20	0'-8"	12	12	10	10	6	7.0	5	6.0	5	12.5	5	12.5	4	6.0	6	7.0	7	7.5	5	7.0	16	5	9.0	4	14.0	0.46	0.94	0.54	0.61	0.40	0.25	0.78	0.57	0.26	0.26	166	166	139	151	163
HS20	2'-3"	12	12	10	10	6	7.0	6	7.5	6	14.5	6	14.5	5	7.0	6	6.0	7	7.0	5	6.5	16	5	11.5	4	14.0	0.38	0.94	0.50	0.61	0.48	0.28	0.80	0.58	0.25	0.27	166	166	139	151	163
HS20	3'-11"	12	12	10	10	5	6.5	5	6.0	5	12.0	5	12.0	5	7.5	6	7.5	7	8.0	5	11.0	16	5	11.5	4	14.0	0.34	0.94	0.43	0.47	0.38	0.25	0.40	0.57	0.22	0.22	166	166	139	151	163
HS20	5'-7"	12	12	10	10	5	6.5	6	8.5	6	15.5	6	15.5	5	6.5	6	7.0	7	7.5	5	11.5	16	5	11.5	4	14.0	0.32	0.94	0.40	0.44	0.34	0.26	0.37	0.58	0.22	0.22	166	166	139	151	163
HS20	7'-2"	12	13	10	10	5	6.5	6	8.0	6	14.5	6	14.5	5	6.5	6	7.0	7	8.0	5	11.5	16	5	11.5	4	14.0	0.30	0.94	0.38	0.42	0.33	0.26	0.35	0.44	0.22	0.22	166	166	140	152	164
HS20 MOD	0'-7"	13	13	10	10	6	6.0	6	8.0	6	16.5	6	16.5	5	8.5	6	6.0	7	7.0	6	8.5	16	5	7.0	4	14.0	0.46	0.93	0.57	0.61	0.42	0.28	0.80	0.58	0.29	0.29	166	166	141	153	165
HS20 MOD	2'-2"	13	13	10	10	6	6.0	6	7.0	6	13.5	6	13.5	5	6.5	7	7.5	7	6.5	6	8.5	16	5	11.5	4	14.0	0.39	0.93	0.52	0.61	0.42	0.28	0.80	0.58	0.26	0.31	166	166	141	153	165
HS20 MOD	4'-0"	11	12	10	10	6	7.5	6	7.0	6	13.0	6	13.0	5	6.5	6	6.0	7	6.0	5	7.0	16	5	11.5	4	14.0	0.34	0.94	0.45	0.48	0.41	0.28	0.43	0.58	0.24	0.23	166	166	138	150	162
HS20 MOD	5'-8"	11	12	10	10	6	8.0	6	7.0	6	12.5	6	12.5	5	6.0	6	6.5	7	7.0	5	10.0	16	5	11.5	4	14.0	0.32	0.94	0.41	0.46	0.37	0.27	0.38	0.58	0.23	0.21	166	166	138	150	162
HS20 MOD	7'-3"	11	13	10	10	6	8.0	6	7.0	6	12.5	6	12.5	5	6.0	6	7.0	7	7.5	5	11.5	16	5	11.5	4	14.0	0.30	0.94	0.40	0.44	0.34	0.27	0.36	0.44	0.22	0.21	166	166	139	151	163
HS20 or HS20 MOD	8'-10"	12	14	10	10	6	8.0	6	7.0	6	14.0	6	14.0	5	6.0	6	8.0	7	8.0	5	11.5	0	5	11.5	4	14.0	0.29	0.94	0.38	0.42	0.31	0.28	0.33	0.38	0.21	0.20	166	166	141	153	165
HS20 or HS20 MOD	10'-5"	13	15	10	10	6	8.5	6	7.0	6	14.0	6	14.0	5	6.0	6	7.5	6	6.0	5	11.5	0	5	11.5	4	14.0	0.28	0.93	0.34	0.39	0.29	0.28	0.33	0.38	0.21	0.21	166	166	143	155	167
HS20 or HS20 MOD	12'-0"	13	16	10	10	6	7.5	6	6.5	6	12.5	6	12.5	6	8.0	6	7.0	7	8.0	5	11.5	0	5	11.5	4	14.0	0.28	0.93	0.35	0.40	0.28	0.26	0.33	0.37	0.21	0.21	166	166	144	156	168
HS20 or HS20 MOD	13'-7"	14	16	11	10	6	7.5	6	7.0	6	12.5	6	12.5	6	8.0	6	7.5	7	8.0	5	11.5	0	5	11.5	4	14.0	0.28	0.93	0.35	0.39	0.28	0.28	0.32	0.37	0.21	0.22	167	166	145	157	169
HS20 or HS20 MOD	15'-2"	15	17	11	10	6	7.5	6	7.0	6	12.5	6	12.5	6	7.5	6	7.0	6	6.0	5	11.5	0	5	11.5	4	14.0	0.27	0.92	0.32	0.36	0.30	0.29	0.35	0.40	0.24	0.25	167	166	147	159	171
HS20 or HS20 MOD	16'-9"	16	18	12	10	6	7.5	6	7.0	6	12.5	6	12.5	6	7.5	6	7.5	6	6.0	5	11.5	0	5	11.5	4	14.0	0.27	0.92	0.31	0.36	0.30	0.29	0.34	0.40	0.24	0.25	167	166	149	161	173
HS20 or HS20 MOD	18'-3"	17	19	12	10	6	7.5	6	7.0	6	12.5	6	12.5	6	7.5	6	7.0	6	6.0	5	11.5	0	5	11.5	4	14.0	0.27	0.91	0.31	0.36	0.30	0.29	0.34	0.40	0.24	0.25	167	166	151	163	175
HS20 or HS20 MOD	19'-10"	18	20	12	10	6	7.5	6	7.0	6	12.5	6	12.5	6	7.5	6	7.0	6	6.0	5	11.5	0	5	10.5	4	14.0	0.27	0.91	0.31	0.36	0.30	0.29	0.34	0.40	0.23	0.25	167	166	153	165	177
HS20 or HS20 MOD	21'-5"	19	21	13	10	6	7.0	6	7.0	6	12.5	6	12.5	6	7.0	6	7.5	6	6.0	5	11.5	0	5	11.0	4	14.0	0.27	0.90	0.31	0.36	0.30	0.30	0.34	0.40	0.23	0.25	168	166	155	167	179
HS20 or HS20 MOD	22'-11"	20	22	13	10	6	7.0	6	7.0	6	12.5	6	12.5	6	7.0	6	7.0	6	6.0	5	11.5	0	5	10.5	4	14.0	0.27	0.90	0.31	0.36	0.30	0.30	0.34	0.40	0.23	0.25	168	166	157	169	181
HS20 or HS20 MOD	24'-7"	20	23	14	10	6	7.0	6	7.0	7	16.0	7	16.0	6	7.0	6	7.5	6	6.0	5	11.5	0	5	11.0	4	14.0	0.27	0.90	0.30	0.35	0.30	0.30	0.37	0.43	0.26	0.28	168	166	158	170	182
HS20 or HS20 MOD	26'-2"	21	23	14	10	6	7.0	6	7.0	7	16.0	7	16.0	6	7.0	6	7.0	7	7.5	5	11.5	0	5	10.5	4	14.0	0.27	0.90	0.33	0.38	0.30	0.30	0.36	0.43	0.26	0.28	168	166	159	171	183
HS20 or HS20 MOD	27'-8"	22	24	14	10	6	7.0	6	7.0	7	16.0	7	16.0	6	7.0	6	7.0	7	7.5	5	11.5	0	5	9.0	4	14.0	0.27	0.89	0.33	0.38	0.30	0.30	0.36	0.43	0.26	0.28	168	166	161	173	185
HS20 or HS20 MOD	29'-3"	23	25	15	10	6	7.0	6	7.0	7	16.0	7	16.0	6	7.0	6	7.0	7	7.5	5	11.5	0	5	10.0	4	14.0	0.27	0.89	0.33	0.38	0.30	0.29	0.36	0.42	0.26	0.28	169	166	163	175	187
HS20 or HS20 MOD	30'-10"	24	26	15	10	6	7.0	6	7.0	7	16.0	7	16.0	6	7.0	6	7.0	7	8.0	5	11.5	0	5	9.0	4	14.0	0.27	0.88	0.33	0.38	0.30	0.29	0.36	0.42	0.26	0.28	169	166	165	177	189

Loading	DESIGN FILL (ft-in)	TS Thick	BS Thick.	TX Thick	TI Thick.	A1 Size	A1 Bars c to c	J3 Size	J3 Bars c to c	H1 Size	H1 Bars c to c	H2 Size	H2 Bars c to c	A2 Size	A2 Bars c to c	J4 Size	J4 Bars c to c	H3 Size	H3 Bars c to c	B1 Size	B1 Bars c to c	B2 Bars G1	B2 Size	B2 c to c	F Size	F Bars c to c	J4 C4	J4 K3	H3 C7	H3 Q10	J3 C1	J3 K2	H1 C5	H1 Q8	H2 C6	H2 Q9	"C" Multiplier S = 13 ft (in)	"Q" Multiplier S = 13 ft (in)	"K" Multiplier HT = 13 ft (in)	"K" Multiplier HT = 14 ft (in)
SPAN (S) = 13 ft; HT (ft) = 13 or 14																																								
HS20	0'-8"	12	12	11	11	6	7.0	6	8.5	5	12.5	5	12.5	5	9.0	6	7.0	7	7.5	5	7.0	16	5	9.5	4	14.0	0.50	0.95	0.55	0.61	0.42	0.22	0.78	0.57	0.26	0.26	167	167	175	187
HS20	2'-3"	12	12	11	11	6	7.0	6	7.0	6	14.5	6	14.5	5	7.0	6	6.0	7	7.0	5	7.0	16	5	11.0	4	14.0	0.41	0.95	0.50	0.52	0.42	0.22	0.80	0.58	0.25	0.26	167	167	175	187
HS20	3'-11"	12	12	11	11	5	6.5	6	8.5	6	16.5	6	16.5	5	7.0	6	7.0	7	8.0	5	11.5	16	5	11.0	4	14.0	0.39	0.95	0.43	0.46	0.46	0.22	0.42	0.58	0.24	0.24	167	167	175	187
HS20	5'-7"	12	12	11	11	5	6.5	6	7.5	6	15.5	6	15.5	5	6.5	6	7.0	7	7.5	5	11.5	16	5	11.0	4	14.0	0.37	0.95	0.40	0.43	0.41	0.22	0.38	0.50	0.23	0.22	167	167	175	187
HS20	7'-2"	12	13	11	11	5	6.5	6	7.0	6	14.5	6	14.5	5	6.0	6	7.0	7	8.0	5	11.5	16	5	10.5	4	14.0	0.35	0.95	0.39	0.42	0.38	0.22	0.35	0.43	0.22	0.22	167	167	176	188
HS20 MOD	0'-7"	13	12	11	11	6	6.0	6	7.0	6	16.5	6	16.5	5	7.0	6	6.0	7	6.0	5	6.0	16	5	7.0	4	14.0	0.50	0.94	0.53	0.61	0.42	0.23	0.80	0.58	0.30	0.32	167	167	176	188
HS20 MOD	2'-2"	13	12	11	11	6	6.0	6	6.5	6	13.5	6	13.5	5	6.5	7	7.0	8	7.5	5	6.5	16	5	11.0	4	14.0	0.44	0.94	0.54	0.64	0.42	0.23	0.80	0.58	0.27	0.30	167	167	176	188
HS20 MOD	4'-0"	11	12	11	11	6	7.5	6	7.0	6	13.0	6	13.0	5	6.5	6	6.0	7	7.0	5	8.5	16	5	11.0	4	14.0	0.39	0.95	0.46	0.48	0.47	0.22	0.43	0.58	0.24	0.22	167	167	174	186
HS20 MOD	5'-8"	11	12	11	11	6	8.0	6	7.0	6	12.5	6	12.5	5	6.0	6	6.0	7	7.0	5	10.5	16	5	11.0	4	14.0	0.36	0.95	0.42	0.45	0.41	0.22	0.38	0.49	0.23	0.21	167	167	174	186
HS20 MOD	7'-3"	11	13	11	11	6	8.0	6	7.0	6	12.5	6	12.5	5	6.0	6	6.5	7	7.0	5	11.5	16	5	10.5	4	14.0	0.35	0.95	0.40	0.43	0.38	0.22	0.36	0.42	0.22	0.21	167	167	175	187
HS20 or HS20 MOD	8'-10"	12	14	11	11	6	8.5	6	6.5	6	14.0	6	14.0	5	6.0	6	7.0	7	8.0	5	11.5	0	5	9.5	4	14.0	0.34	0.95	0.38	0.41	0.36	0.22	0.33	0.38	0.21	0.20	167	167	177	189
HS20 or HS20 MOD	10'-5"	13	15	11	11	6	8.5	6	6.0	6	14.0	6	14.0	5	6.0	6	6.5	6	6.0	5	11.5	0	5	9.0	4	14.0	0.33	0.94	0.35	0.38	0.34	0.22	0.33	0.37	0.21	0.21	167	167	179	191
HS20 or HS20 MOD	12'-0"	13	16	12	11	6	8.0	6	6.5	6	12.5	6	12.5	6	8.5	6	7.0	6	6.0	5	11.5	0	5	9.5	4	14.0	0.32	0.94	0.33	0.37	0.32	0.22	0.33	0.37	0.21	0.21	168	167	180	192
HS20 or HS20 MOD	13'-7"	14	17	12	11	6	8.0	6	6.5	6	12.5	6	12.5	6	8.5	6	6.5	6	6.5	5	11.5	0	5	9.0	4	14.0	0.32	0.94	0.33	0.36	0.32	0.23	0.32	0.37	0.21	0.21	168	167	182	194
HS20 or HS20 MOD	15'-2"	15	18	13	11	6	8.0	6	7.0	6	12.5	6	12.5	6	7.5	6	7.0	7	8.0	5	11.5	0	5	9.0	4	14.0	0.31	0.93	0.34	0.38	0.34	0.23	0.35	0.40	0.24	0.25	168	167	184	196
HS20 or HS20 MOD	16'-9"	16	18	13	11	6	7.5	6	6.5	6	12.5	6	12.5	6	7.5	6	6.5	6	6.0	5	11.5	0	5	9.0	4	14.0	0.31	0.93	0.32	0.36	0.34	0.23	0.35	0.40	0.24	0.25	168	167	185	197
HS20 or HS20 MOD	18'-3"	17	19	14	11	6	7.5	6	7.0	6	12.5	6	12.5	6	7.5	6	6.5	6	6.0	5	11.5	0	5	9.0	4	14.0	0.31	0.92	0.31	0.35	0.34	0.24	0.34	0.40	0.24	0.25	169	167	187	199
HS20 or HS20 MOD	19'-10"	18	20	14	11	6	7.5	6	6.5	6	12.5	6	12.5	6	7.5	6	6.5	6	6.0	5	11.5	0	5	8.5	4	14.0	0.31	0.92	0.31	0.35	0.34	0.24	0.34	0.40	0.24	0.25	169	167	189	201
HS20 or HS20 MOD	21'-5"	19	21	15	11	6	7.5	6	7.0	6	12.5	6	12.5	6	7.5	6	6.5	6	6.0	5	11.5	0	5	9.0	4	14.0	0.31	0.92	0.31	0.35	0.34	0.24	0.34	0.39	0.23	0.25	169	167	191	203
HS20 or HS20 MOD	22'-11"	20	22	15	11	6	7.5	6	6.5	6	12.5	6	12.5	6	7.0	6	6.5	6	6.0	5	11.5	0	5	8.0	4	14.0	0.31	0.91	0.31	0.35	0.34	0.24	0.34	0.39	0.23	0.25	169	167	193	205
HS20 or HS20 MOD	24'-7"	20	23	16	11	6	7.0	6	6.5	6	12.0	6	12.0	6	7.0	6	7.0	6	6.0	5	11.5	0	5	8.5	4	14.0	0.31	0.91	0.31	0.35	0.34	0.24	0.34	0.39	0.24	0.25	170	167	194	206
HS20 or HS20 MOD	26'-2"	21	24	16	11	6	7.0	6	6.5	6	12.0	6	12.0	6	7.0	6	6.5	6	6.0	5	11.5	0	5	8.0	4	14.0	0.31	0.91	0.31	0.35	0.34	0.25	0.34	0.39	0.23	0.25	170	167	196	208
HS20 or HS20 MOD	27'-8"	22	24	17	11	6	7.0	6	6.5	7	16.5	7	16.5	6	7.0	6	6.5	7	7.5	5	11.5	0	5	8.5	4	14.0	0.31	0.90	0.33	0.37	0.34	0.25	0.36	0.42	0.26	0.28	170	167	197	209
HS20 or HS20 MOD	29'-3"	23	25	17	11	6	7.0	6	6.5	7	16.5	7	16.5	6	7.0	6	6.5	7	7.5	5	11.5	0	5	7.5	4	14.0	0.31	0.90	0.33	0.37	0.34	0.25	0.36	0.42	0.26	0.28	170	167	199	211
HS20 or HS20 MOD	30'-10"	24	26	17	11	6	7.0	6	6.0	6	12.0	6	12.0	6	7.0	6	6.0	7	7.5	5	11.5	0	5	7.0	4	14.0	0.31	0.90	0.33	0.37	0.34	0.25	0.33	0.39	0.23	0.25	170	167	201	213

Loading	DESIGN FILL (ft-in)	TS Thick	BS Thick.	TX Thick	TI Thick.	A1 Size	A1 Bars c to c	J3 Size	J3 Bars c to c	H1 Size	H1 Bars c to c	H2 Size	H2 Bars c to c	A2 Size	A2 Bars c to c	J4 Size	J4 Bars c to c	H3 Size	H3 Bars c to c	B1 Size	B1 Bars c to c	B2 Bars G1	B2 Size	B2 c to c	F Size	F Bars c to c	J4 C4	J4 K3	H3 C7	H3 Q10	J3 C1	J3 K2	H1 C5	H1 Q8	H2 C6	H2 Q9	"C" Multiplier S = 13 ft (in)	"Q" Multiplier S = 13 ft (in)	"K" Multiplier HT = 15 ft (in)	"K" Multiplier HT = 16 ft (in)
SPAN (S) = 13 ft; HT (ft) = 15 or 16																																								
HS20	0'-8"	12	12	12	12	6	7.0	6	8.0	5	12.5	5	12.5	5	8.0	7	8.0	7	7.5	5	7.5	16	5	9.0	4	14.0	0.57	0.95	0.56	0.60	0.42	0.20	0.78	0.57	0.25	0.25	168	168	199	211
HS20	2'-3"	12	12	12	12	6	7.0	6	7.0	6	14.0	6	14.0	5	7.0	7	7.0	7	6.5	5	7.5	16	5	8.5	4	14.0	0.50	0.95	0.50	0.51	0.42	0.20	0.80	0.58	0.25	0.26	168	168	199	211
HS20	3'-11"	12	12	12	12	5	6.5	6	7.5	6	16.5	6	16.5	5	7.0	7	7.5	7	7.5	5	11.5	16	5	8.5	4	14.0	0.45	0.95	0.43	0.45	0.50	0.20	0.80	0.58	0.24	0.23	168	168	199	211
HS20	5'-7"	12	13	12	12	5	6.5	6	7.0	6	15.5	6	15.5	5	6.0	6	6.0	7	7.5	5	11.5	16	5	7.5	4	14.0	0.41	0.95	0.40	0.42	0.47	0.20	0.38	0.48	0.23	0.22	168	168	200	212
HS20	7'-2"	12	13	12	12	5	6.5	6	7.0	6	14.5	6	14.5	5	6.0	6	6.0	7	8.0	5	11.5	16	5	7.0	4	14.0	0.40	0.95	0.39	0.41	0.43	0.20	0.36	0.42	0.22	0.22	168	168	200	212
HS20 MOD	0'-7"	13	12	12	12	6	6.0	6	7.0	6	16.5	6	16.5	5	7.0	7	7.0	7	6.5	5	7.0	16	5	7.5	4	14.0	0.57	0.95	0.56	0.60	0.42	0.20	0.80	0.58	0.29	0.29	168	168	200	212
HS20 MOD	2'-2"	13	12	12	12	6	6.0	6	6.0	6	13.5	6	13.5	5	6.0	7	6.5	8	7.5	5	7.0	16	5	8.5	4	14.0	0.50	0.95	0.54	0.55	0.42	0.20	0.80	0.58	0.26	0.29	168	168	200	212
HS20 MOD	4'-0"	11	12	12	12	6	7.5	6	7.0	6	13.0	6	13.0	5	6.5	7	7.5	7	7.0	5	9.0	16	5	7.5	4	14.0	0.46	0.96	0.46	0.47	0.51	0.19	0.80	0.58	0.24	0.22	168	168	198	210
HS20 MOD	5'-8"	11	13	12	12	6	8.0	6	7.0	6	12.5	6	12.5	5	6.0	6	6.0	7	7.5	5	11.0	16	5	7.5	4	14.0	0.41	0.96	0.43	0.45	0.47	0.19	0.38	0.47	0.23	0.21	168	168	199	211
HS20 MOD	7'-3"	11	13	12	12	6	8.0	6	6.0	6	12.5	6	12.5	6	8.5	7	8.0	7	7.0	5	11.5	16	5	7.0	4	14.0	0.42	0.96	0.41	0.42	0.42	0.19	0.36	0.41	0.22	0.21	168	168	199	211
HS20 or HS20 MOD	8'-10"	12	14	12	12	5	6.0	6	6.0	6	14.0	6	14.0	5	6.0	6	6.0	7	7.5	5	11.5	0	5	7.0	4	14.0	0.39	0.95	0.39	0.41	0.40	0.20	0.34	0.37	0.22	0.20	168	168	201	213
HS20 or HS20 MOD	10'-5"	13	15	13	12	5	6.0	6	6.0	6	14.0	6	14.0	6	8.5	6	6.5	6	6.0	5	11.5	0	5	7.0	4	14.0	0.38	0.95	0.35	0.37	0.38	0.20	0.33	0.37	0.22	0.21	169	168	203	215
HS20 or HS20 MOD	12'-0"	13	16	14	12	6	8.0	6	6.5	6	12.5	6	12.5	6	8.5	6	6.5	6	6.0	5	11.5	0	5	7.0	4	14.0	0.37	0.95	0.34	0.36	0.37	0.20	0.33	0.36	0.21	0.21	169	168	204	216
HS20 or HS20 MOD	13'-7"	14	17	14	12	6	8.0	6	6.0	6	12.5	6	12.5	6	8.0	6	6.0	6	6.0	5	11.5	0	5	7.0	4	14.0	0.37	0.95	0.33	0.36	0.36	0.20	0.32	0.36	0.21	0.21	169	168	206	218
HS20 or HS20 MOD	15'-2"	15	18	15	12	6	8.0	6	6.5	6	12.5	6	12.5	6	8.0	6	6.5	6	6.5	5	11.5	0	5	7.0	4	14.0	0.36	0.94	0.32	0.35	0.39	0.20	0.35	0.39	0.24	0.24	170	168	208	220
HS20 or HS20 MOD	16'-9"	16	19	15	12	6	8.0	6	6.0	6	12.5	6	12.5	6	8.0	6	6.0	6	6.5	5	11.5	0	5	7.0	4	14.0	0.36	0.94	0.32	0.35	0.39	0.21	0.35	0.39	0.24	0.25	170	168	210	222
HS20 or HS20 MOD	18'-3"	17	20	16	12	6	8.0	6	6.5	6	12.5	6	12.5	6	7.5	6	6.0	7	8.0	5	11.5	0	5	7.0	4	14.0	0.36	0.93	0.34	0.38	0.38	0.21	0.34	0.39	0.24	0.25	170	168	212	224
HS20 or HS20 MOD	19'-10"	18	20	16	12	6	8.0	6	6.0	6	12.5	6	12.5	6	7.5	7	8.0	6	6.0	5	11.5	0	5	7.0	4	14.0	0.38	0.93	0.32	0.35	0.38	0.21	0.34	0.39	0.24	0.25	170	168	213	225
HS20 or HS20 MOD	21'-5"	19	21	17	12	6	8.0	6	6.0	6	12.5	6	12.5	6	7.5	6	6.0	7	8.0	5	11.5	0	5	7.0	4	14.0	0.35	0.93	0.34	0.37	0.38	0.22	0.34	0.39	0.24	0.25	171	168	215	227
HS20 or HS20 MOD	22'-11"	20	22	17	12	6	8.0	6	6.0	6	12.5	6	12.5	6	7.0	7	7.5	6	6.0	5	11.5	0	5	6.5	4	14.0	0.38	0.92	0.31	0.35	0.38	0.22	0.34	0.39	0.24	0.25	171	168	217	229
HS20 or HS20 MOD	24'-7"	20	23	18	12	6	7.5	6	6.0	6	12.0	6	12.0	6	7.0	6	6.0	6	6.0	5	11.5	0	5	7.0	4	14.0	0.35	0.92	0.31	0.34	0.38	0.22	0.34	0.39	0.24	0.25	171	168	218	230
HS20 or HS20 MOD	26'-2"	21	24	18	12	6	7.0	7	8.0	6	12.0	6	12.0	6	7.0	7	7.5	6	6.0	5	11.5	0	5	6.0	4	14.0	0.37	0.92	0.31	0.34	0.41	0.24	0.34	0.39	0.24	0.25	171	168	220	232
HS20 or HS20 MOD	27'-8"	22	25	19	12	6	7.0	6	6.0	6	12.0	6	12.0	6	7.0	7	8.0	7	7.5	5	11.5	0	5	6.5	4	14.0	0.37	0.92	0.33	0.37	0.38	0.22	0.34	0.39	0.23	0.25	172	168	222	234
HS20 or HS20 MOD	29'-3"	23	25	19	12	6	7.0	7	8.0	6	12.0	6	12.0	6	7.0	7	7.5	7	7.5	5	11.5	0	5	6.0	4	14.0	0.37	0.91	0.33	0.37	0.41	0.24	0.33	0.39	0.23	0.25	172	168	223	235
HS20 or HS20 MOD	30'-10"	24	26	20	12	6	7.0	6	6.0	6	12.0	6	12.0	6	7.0	7	7.5	7	7.5	5	11.5	0	5	6.0	4	14.0	0.37	0.91	0.33	0.37	0.38	0.23	0.33	0.38	0.23	0.25	172	168	225	237

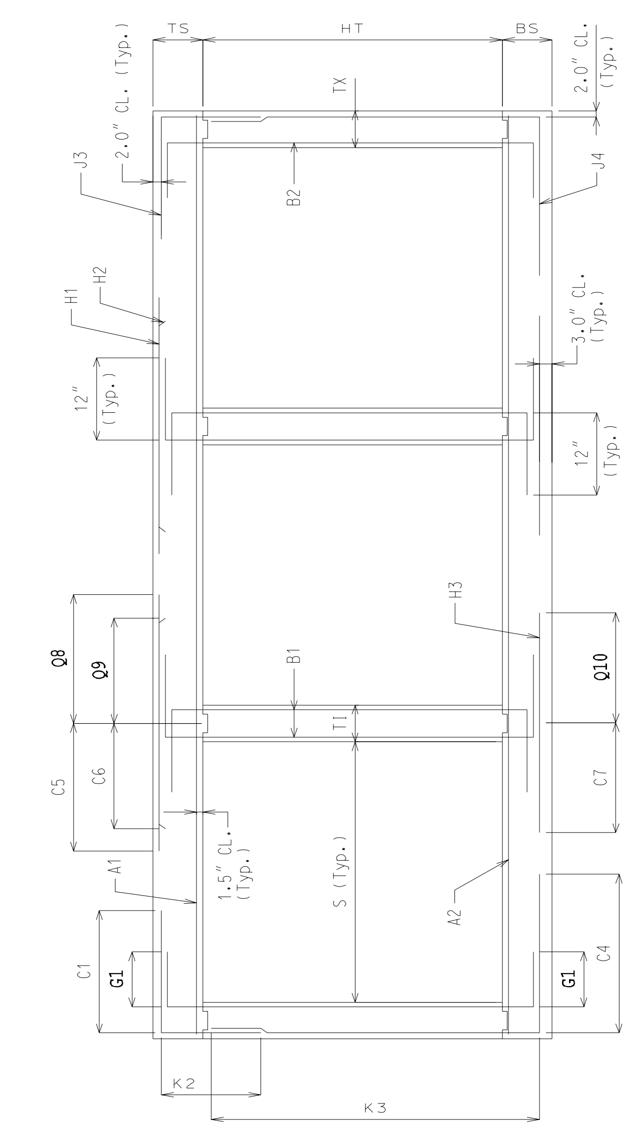

SECTION THRU BOX

NOTE: IF DESIGN FILL FALLS BETWEEN TABULATED FILLS, USE THE ADJACENT TABULATED FILL WHICH YIELDS THE GREATER MEMBER THICKNESS. IF THE MEMBER THICKNESSES ARE EQUAL, USE THE ADJACENT TABULATED FILL WHICH YIELDS THE GREATER AREA OF REINFORCEMENT.

SPECIAL DESIGNS ARE REQUIRED WHEN THE DESIGN FILL IS OUTSIDE THE RANGE OF TABULATED FILLS.

ALL DIMENSIONS ARE IN inch UNLESS OTHERWISE SPECIFIED.

COEFFICIENTS: DIMENSIONS MARKED WITH C# OR K# ARE THE PRODUCT OF THE COEFFICIENT AND ITS ASSOCIATED MULTIPLIER.

DESIGN FILL HEIGHT GIVEN IN THE TABLES IS THE HEIGHT FROM THE TOP OF THE EARTH FILL OR ROADWAY TO THE TOP OF THE TOP SLAB.

ALL CULVERTS MEET STRENGTH REQUIREMENTS FOR MILITARY 24 kips TANDEM AXLE LOADING.

MISSOURI HIGHWAY AND TRANSPORTATION COMMISSION

CONCRETE TRIPLE BOX CULVERT

MEMBER SIZES AND REINFORCEMENT

(HS20 & HS20 MOD. LOADING)

DATE:

EFFECTIVE: 04-01-2002

703.85B

Span (S) = 14 ft; HT (ft) = 11 or 12

Load	DESIGN FILL (ft-in)	TS Thick	BS Thick.	TX Thick	TI Thick.	Top Slab A1 Size	A1 Bars c to c	J3 Size	J3 Bars c to c	H1 Size	H1 Bars c to c	H2 Size	H2 Bars c to c	Bottom Slab A2 Size	A2 Bars c to c	J4 Size	J4 Bars c to c	H3 Size	H3 Bars c to c	Wall B1 Size	B1 Bars c to c	B2 Bars G1	B2 Size	B2 c to c	F Size	F Bars c to c	J4 C4	J4 K3	H3 C7	H3 Q10	J3 C1	J3 K2	H1 C5	H1 Q8	H2 C6	H2 Q9	"C" Multiplier S = 14 ft (in)	"Q" Multiplier S = 14 ft (in)	"K" Multiplier HT = 11 ft (in)	"K" Multiplier HT = 12 ft (in)
HS20	0'-8"	12	12	10	10	6	6.5	6	8.0	6	16.5	6	16.5	5	8.0	7	8.0	7	7.0	5	6.0	16	5	8.5	4	14.0	0.43	0.94	0.52	0.60	0.41	0.26	0.79	0.58	0.29	0.28	178	178	151	163
	2'-3"	12	12	10	10	6	6.0	6	7.0	6	13.5	6	13.5	5	6.5	6	6.0	7	6.0	5	6.0	16	5	11.5	4	14.0	0.36	0.94	0.48	0.60	0.50	0.26	0.53	0.58	0.24	0.26	178	178	151	163
	3'-11"	12	12	10	10	6	8.0	6	8.0	6	15.5	6	15.5	5	7.0	6	7.0	7	7.0	5	10.0	16	5	11.5	4	14.0	0.32	0.94	0.41	0.46	0.37	0.26	0.40	0.58	0.22	0.23	178	178	151	163
	5'-7"	12	12	10	10	6	8.0	6	7.5	6	14.0	6	14.0	6	8.5	6	7.0	7	6.5	5	11.5	16	5	11.5	4	14.0	0.30	0.94	0.39	0.43	0.33	0.26	0.37	0.48	0.21	0.22	178	178	151	163
	7'-2"	12	13	10	10	6	8.0	6	7.0	6	12.5	6	12.5	6	8.0	6	7.0	7	7.0	5	11.5	16	5	11.5	4	14.0	0.28	0.94	0.38	0.41	0.30	0.26	0.34	0.43	0.21	0.21	178	178	152	164
HS20 MOD	0'-7"	13	13	10	10	7	8.0	6	7.0	6	15.0	6	15.0	5	7.0	7	7.5	7	6.5	6	8.0	16	5	7.0	4	14.0	0.46	0.93	0.55	0.60	0.41	0.26	0.79	0.58	0.31	0.31	178	178	153	165
	2'-2"	13	13	10	10	7	7.0	6	6.5	6	12.5	6	12.5	5	6.0	7	7.0	8	7.5	6	7.5	16	5	10.5	4	14.0	0.36	0.93	0.54	0.63	0.41	0.26	0.79	0.58	0.25	0.29	178	178	153	165
	4'-0"	11	12	10	10	6	6.5	6	7.0	6	12.0	6	12.0	5	6.0	6	6.5	7	6.0	5	7.0	16	5	11.5	4	14.0	0.31	0.94	0.44	0.48	0.39	0.25	0.40	0.58	0.22	0.22	178	178	150	162
	5'-8"	11	13	10	10	6	7.0	6	7.0	7	15.0	7	15.0	6	8.5	6	7.0	7	7.0	5	8.5	16	5	11.5	4	14.0	0.29	0.94	0.41	0.46	0.34	0.25	0.39	0.51	0.24	0.23	178	178	151	163
	7'-2"	12	14	10	10	6	7.5	6	7.0	6	12.0	6	12.0	6	8.5	6	7.0	7	7.0	5	11.5	16	5	11.5	4	14.0	0.28	0.94	0.39	0.43	0.31	0.25	0.35	0.45	0.21	0.21	178	178	153	165
HS20 or HS20 MOD	8'-9"	13	15	10	10	6	7.5	6	7.0	6	13.0	6	13.0	6	8.5	6	8.0	7	7.5	5	11.5	0	5	11.5	4	14.0	0.27	0.93	0.37	0.42	0.29	0.26	0.32	0.38	0.20	0.20	178	178	155	167
	10'-5"	13	15	10	10	6	7.0	6	6.0	6	12.0	6	12.0	6	7.5	6	7.0	7	7.0	5	11.5	0	5	11.5	4	14.0	0.26	0.93	0.36	0.40	0.28	0.26	0.32	0.37	0.20	0.20	178	178	155	167
	11'-11"	14	16	10	10	6	7.0	6	6.0	6	12.0	6	12.0	6	7.0	6	7.0	7	7.0	5	11.5	0	5	11.5	4	14.0	0.25	0.93	0.35	0.39	0.26	0.26	0.32	0.37	0.20	0.21	178	178	157	169
	13'-6"	15	17	11	10	6	7.0	6	7.0	6	12.0	6	12.0	6	7.0	6	7.0	7	7.0	5	11.5	0	5	11.5	4	14.0	0.25	0.92	0.34	0.39	0.28	0.26	0.34	0.40	0.23	0.24	179	178	159	171
	15'-1"	16	18	11	10	6	7.0	6	7.0	6	12.0	6	12.0	6	7.0	6	7.0	7	7.5	5	11.5	0	5	11.5	4	14.0	0.25	0.92	0.33	0.38	0.28	0.27	0.34	0.40	0.23	0.24	179	178	161	173
	16'-8"	17	19	12	10	6	7.0	6	7.0	7	16.0	7	16.0	6	7.0	6	7.0	7	7.5	5	11.5	0	5	11.5	4	14.0	0.25	0.91	0.33	0.38	0.28	0.27	0.36	0.42	0.25	0.27	179	178	163	175
	18'-2"	18	20	12	10	6	7.0	6	7.0	7	16.0	7	16.0	6	7.0	6	7.0	7	7.5	5	11.5	0	5	11.5	4	14.0	0.25	0.91	0.33	0.38	0.27	0.27	0.36	0.42	0.25	0.27	179	178	165	177
	19'-9"	19	21	12	10	6	7.0	6	7.0	7	15.5	7	15.5	6	7.0	6	7.0	7	7.5	5	11.5	0	5	11.0	4	14.0	0.25	0.90	0.33	0.38	0.27	0.28	0.36	0.42	0.25	0.27	179	178	167	179
	21'-4"	20	22	13	10	6	7.0	6	7.0	7	15.5	7	15.5	6	7.0	6	7.0	7	7.5	5	11.5	0	5	11.5	4	14.0	0.25	0.90	0.32	0.38	0.27	0.28	0.36	0.42	0.25	0.27	180	178	169	181
	22'-10"	21	23	13	10	6	7.0	6	7.0	7	15.5	7	15.5	6	6.5	6	7.0	7	7.0	5	11.5	0	5	11.0	4	14.0	0.24	0.90	0.32	0.37	0.27	0.28	0.35	0.42	0.25	0.27	180	178	171	183
	24'-5"	22	24	14	10	6	6.5	6	7.0	7	15.0	7	15.0	6	6.5	6	7.5	7	7.0	5	11.5	0	5	11.0	4	14.0	0.25	0.89	0.32	0.37	0.27	0.28	0.35	0.42	0.25	0.27	180	178	173	185
	26'-0"	23	25	14	10	6	6.5	6	7.0	7	15.0	7	15.0	6	6.5	6	7.0	7	7.0	5	11.5	0	5	10.5	4	14.0	0.25	0.89	0.32	0.37	0.27	0.29	0.35	0.42	0.25	0.27	180	178	175	187
	27'-6"	24	26	14	10	6	6.5	6	7.0	7	15.0	7	15.0	6	6.5	6	7.0	7	7.0	5	11.5	0	5	9.0	4	14.0	0.24	0.88	0.32	0.37	0.27	0.29	0.35	0.42	0.25	0.27	180	178	177	189
	29'-2"	24	27	15	10	6	6.0	6	7.0	7	14.5	7	14.5	6	6.5	6	7.5	7	7.0	5	11.5	0	5	10.5	4	14.0	0.25	0.88	0.32	0.37	0.28	0.29	0.35	0.42	0.25	0.27	181	178	178	190
	30'-9"	25	28	15	10	6	6.0	6	7.0	7	14.5	7	14.5	6	6.0	6	7.0	7	7.0	5	11.5	0	5	9.0	4	14.0	0.25	0.88	0.32	0.37	0.27	0.29	0.35	0.42	0.25	0.27	181	178	180	192

SPAN (S) = 14 ft; HT (ft) = 13 or 14

Load	DESIGN FILL (ft-in)	TS Thick	BS Thick.	TX Thick	TI Thick.	Top Slab A1 Size	A1 Bars c to c	J3 Size	J3 Bars c to c	H1 Size	H1 Bars c to c	H2 Size	H2 Bars c to c	Bottom Slab A2 Size	A2 Bars c to c	J4 Size	J4 Bars c to c	H3 Size	H3 Bars c to c	Wall B1 Size	B1 Bars c to c	B2 Bars G1	B2 Size	B2 c to c	F Size	F Bars c to c	J4 C4	J4 K3	H3 C7	H3 Q10	J3 C1	J3 K2	H1 C5	H1 Q8	H2 C6	H2 Q9	"C" Multiplier S = 14 ft (in)	"Q" Multiplier S = 14 ft (in)	"K" Multiplier HT = 13 ft (in)	"K" Multiplier HT = 14 ft (in)
HS20	0'-8"	12	12	11	11	6	6.5	6	7.5	6	16.5	6	16.5	5	7.5	7	8.0	7	7.0	5	7.0	16	5	9.0	4	14.0	0.48	0.95	0.52	0.60	0.41	0.22	0.79	0.58	0.28	0.27	179	179	175	187
	2'-3"	12	12	11	11	6	6.0	6	7.0	6	13.5	6	13.5	5	6.5	7	8.0	7	6.0	5	6.5	16	5	11.0	4	14.0	0.40	0.95	0.48	0.50	0.41	0.22	0.79	0.58	0.24	0.26	179	179	175	187
	3'-11"	12	12	11	11	6	8.5	6	7.5	6	15.5	6	15.5	5	6.5	6	7.0	7	7.0	5	10.5	16	5	11.5	4	14.0	0.36	0.95	0.41	0.45	0.42	0.22	0.41	0.58	0.23	0.23	179	179	175	187
	5'-7"	12	13	11	11	6	8.5	6	7.0	6	14.0	6	14.0	5	6.0	6	7.0	7	7.5	5	11.5	16	5	11.5	4	14.0	0.34	0.95	0.40	0.43	0.38	0.22	0.37	0.46	0.22	0.22	179	179	176	188
	7'-2"	12	14	11	11	6	8.0	6	7.0	6	12.5	6	12.5	6	8.5	6	6.5	7	7.5	5	11.5	16	5	11.0	4	14.0	0.32	0.95	0.38	0.41	0.35	0.22	0.35	0.41	0.21	0.21	179	179	177	189
HS20 MOD	0'-7"	13	13	11	11	7	8.0	6	7.0	6	15.0	6	15.0	5	7.0	7	7.0	7	6.5	6	8.5	16	5	7.0	4	14.0	0.50	0.94	0.55	0.60	0.41	0.23	0.79	0.58	0.30	0.30	179	179	177	189
	2'-2"	13	13	11	11	7	7.0	6	6.0	6	12.5	6	12.5	5	6.0	7	7.5	8	7.5	6	8.0	16	5	10.0	4	14.0	0.40	0.94	0.54	0.63	0.41	0.23	0.79	0.58	0.26	0.28	179	179	177	189
	4'-0"	11	12	11	11	6	7.0	6	7.0	6	12.5	6	12.5	5	6.0	6	6.5	7	6.0	5	7.5	16	5	11.0	4	14.0	0.36	0.95	0.44	0.47	0.43	0.22	0.41	0.58	0.23	0.22	179	179	174	186
	5'-8"	11	13	11	11	6	7.0	6	6.5	7	15.0	7	15.0	6	8.5	6	6.0	7	6.5	5	9.0	16	5	11.0	4	14.0	0.34	0.95	0.41	0.45	0.38	0.22	0.39	0.49	0.24	0.23	179	179	175	187
	7'-2"	12	14	11	11	6	7.5	6	6.5	6	12.0	6	12.0	6	8.0	6	6.0	7	7.0	5	11.5	16	5	11.0	4	14.0	0.32	0.95	0.39	0.42	0.35	0.22	0.35	0.43	0.21	0.21	179	179	177	189
HS20 or HS20 MOD	8'-9"	13	15	11	11	6	7.5	6	6.0	6	13.0	6	13.0	6	8.5	6	7.0	7	7.5	5	11.5	0	5	10.5	4	14.0	0.31	0.94	0.38	0.41	0.33	0.22	0.33	0.38	0.21	0.20	179	179	179	191
	10'-5"	13	16	11	11	6	7.0	7	8.0	7	16.0	7	16.0	6	8.0	6	6.5	7	7.5	5	11.5	0	5	9.0	4	14.0	0.30	0.94	0.36	0.40	0.34	0.25	0.35	0.39	0.23	0.22	179	179	180	192
	11'-11"	14	17	12	11	6	7.0	6	6.0	6	12.0	6	12.0	6	8.0	6	7.0	7	8.0	5	11.5	0	5	10.0	4	14.0	0.30	0.94	0.35	0.39	0.30	0.23	0.32	0.37	0.20	0.20	180	179	182	194
	13'-6"	15	18	12	11	6	7.0	6	6.0	6	12.0	6	12.0	6	7.5	6	6.5	7	8.0	5	11.5	0	5	9.0	4	14.0	0.29	0.93	0.34	0.38	0.32	0.23	0.34	0.39	0.23	0.24	180	179	184	196
	15'-1"	16	19	13	11	6	7.0	6	6.5	6	12.0	6	12.0	6	7.0	6	7.0	7	7.0	5	11.5	0	5	9.5	4	14.0	0.29	0.93	0.34	0.38	0.32	0.23	0.34	0.39	0.23	0.24	180	179	186	198
	16'-8"	17	20	13	11	6	7.0	6	6.0	7	16.0	7	16.0	6	7.0	6	6.5	7	7.5	5	11.5	0	5	9.0	4	14.0	0.29	0.92	0.33	0.38	0.31	0.24	0.36	0.42	0.25	0.27	180	179	188	200
	18'-2"	18	20	14	11	6	7.0	6	6.5	7	16.0	7	16.0	6	7.0	6	6.5	7	7.0	5	11.5	0	5	9.5	4	14.0	0.29	0.92	0.33	0.37	0.31	0.24	0.36	0.42	0.25	0.27	181	179	189	201
	19'-9"	19	21	14	11	6	7.0	6	6.0	7	16.0	7	16.0	6	7.0	6	6.0	7	7.5	5	11.5	0	5	9.0	4	14.0	0.29	0.92	0.33	0.37	0.31	0.24	0.36	0.42	0.25	0.27	181	179	191	203
	21'-4"	20	22	15	11	6	7.0	6	6.5	7	15.5	7	15.5	6	7.0	6	6.5	7	7.0	5	11.5	0	5	9.0	4	14.0	0.29	0.91	0.33	0.37	0.31	0.24	0.36	0.42	0.25	0.27	181	179	193	205
	22'-10"	21	23	15	11	6	7.0	6	6.0	7	15.5	7	15.5	6	6.5	6	6.0	7	7.0	5	11.5	0	5	8.5	4	14.0	0.28	0.91	0.32	0.37	0.31	0.25	0.36	0.42	0.25	0.27	181	179	195	207
	24'-5"	22	24	16	11	6	7.0	6	6.5	7	15.5	7	15.5	6	6.5	6	6.5	7	7.0	5	11.5	0	5	9.0	4	14.0	0.29	0.90	0.32	0.37	0.31	0.25	0.35	0.41	0.25	0.27	182	179	197	209
	26'-0"	23	25	16	11	6	7.0	6	6.0	7	15.0	7	15.0	6	6.5	6	6.0	7	7.0	5	11.5	0	5	8.5	4	14.0	0.28	0.90	0.32	0.37	0.31	0.25	0.35	0.41	0.25	0.27	182	179	199	211
	27'-6"	24	26	17	11	6	7.0	6	6.5	7	15.0	7	15.0	6	6.5	6	6.5	7	7.0	5	11.5	0	5	8.5	4	14.0	0.29	0.90	0.32	0.37	0.31	0.25	0.35	0.41	0.25	0.27	182	179	201	213
	29'-2"	24	27	17	11	6	6.5	6	6.0	7	14.5	7	14.5	6	6.5	6	6.5	7	7.0	5	11.5	0	5	8.0	4	14.0	0.28	0.90	0.32	0.36	0.31	0.25	0.35	0.41	0.25	0.27	182	179	202	214
	30'-9"	25	28	17	11	6	6.5	6	6.0	7	14.5	7	14.5	6	6.0	6	6.0	7	7.0	5	11.5	0	5	7.0	4	14.0	0.28	0.89	0.32	0.36	0.31	0.26	0.35	0.41	0.25	0.27	182	179	204	216

SPAN (S) = 14 ft; HT (ft) = 15 or 16

Load	DESIGN FILL (ft-in)	TS Thick	BS Thick.	TX Thick	TI Thick.	Top Slab A1 Size	A1 Bars c to c	J3 Size	J3 Bars c to c	H1 Size	H1 Bars c to c	H2 Size	H2 Bars c to c	Bottom Slab A2 Size	A2 Bars c to c	J4 Size	J4 Bars c to c	H3 Size	H3 Bars c to c	Wall B1 Size	B1 Bars c to c	B2 Bars G1	B2 Size	B2 c to c	F Size	F Bars c to c	J4 C4	J4 K3	H3 C7	H3 Q10	J3 C1	J3 K2	H1 C5	H1 Q8	H2 C6	H2 Q9	"C" Multiplier S = 14 ft (in)	"Q" Multiplier S = 14 ft (in)	"K" Multiplier HT = 15 ft (in)	"K" Multiplier HT = 16 ft (in)
HS20	0'-8"	12	12	12	12	6	6.5	6	7.5	6	16.5	6	16.5	5	7.5	7	7.0	7	7.0	5	7.0	16	5	9.0	4	14.0	0.53	0.95	0.53	0.60	0.41	0.20	0.79	0.58	0.28	0.27	180	180	199	211
	2'-3"	12	13	12	12	6	6.0	6	6.5	6	13.5	6	13.5	5	6.0	7	8.0	8	7.5	5	7.0	16	5	8.5	4	14.0	0.45	0.95	0.52	0.53	0.41	0.20	0.79	0.58	0.25	0.26	180	180	200	212
	3'-11"	12	13	12	12	6	8.5	6	7.0	6	15.5	6	15.5	5	6.5	6	6.0	7	7.0	5	11.0	16	5	8.5	4	14.0	0.40	0.95	0.43	0.44	0.48	0.20	0.42	0.58	0.23	0.23	180	180	200	212
	5'-7"	12	13	12	12	6	8.5	6	7.0	6	14.0	6	14.0	5	6.0	6	6.0	7	7.0	5	11.5	16	5	8.5	4	14.0	0.38	0.95	0.40	0.42	0.42	0.20	0.37	0.45	0.22	0.22	180	180	200	212
	7'-2"	12	14	12	12	6	8.5	6	6.0	6	12.5	6	12.5	6	8.5	7	8.0	7	7.5	5	11.5	16	5	7.5	4	14.0	0.37	0.95	0.38	0.41	0.39	0.20	0.35	0.40	0.21	0.21	180	180	201	213
HS20 MOD	0'-7"	13	12	12	12	7	8.0	6	7.0	6	14.5	6	14.5	5	7.0	7	6.5	8	7.5	5	6.0	16	5	7.0	4	14.0	0.53	0.95	0.55	0.60	0.41	0.20	0.79	0.58	0.31	0.31	180	180	200	212
	2'-2"	13	13	12	12	7	7.0	6	6.0	6	13.0	6	13.0	6	8.5	7	7.0	8	7.5	5	6.0	16	5	8.5	4	14.0	0.48	0.95	0.54	0.63	0.41	0.20	0.79	0.58	0.26	0.28	180	180	201	213
	4'-0"	11	12	12	12	6	7.0	6	6.5	6	12.0	6	12.0	6	8.5	7	7.0	7	6.0	5	8.0	16	5	8.0	4	14.0	0.42	0.96	0.44	0.46	0.49	0.19	0.41	0.58	0.23	0.22	180	180	198	210
	5'-8"	11	13	12	12	6	7.0	6	6.0	7	15.5	7	15.5	6	8.0	6	6.0	7	6.5	5	9.5	16	5	7.5	4	14.0	0.38	0.96	0.42	0.44	0.43	0.19	0.39	0.47	0.24	0.23	180	180	199	211
	7'-2"	12	14	12	12	6	7.5	6	6.0	7	16.0	7	16.0	6	8.0	7	7.5	7	7.0	5	11.5	16	5	7.5	4	14.0	0.39	0.95	0.39	0.42	0.40	0.20	0.38	0.45	0.24	0.23	180	180	201	213
HS20 or HS20 MOD	8'-9"	13	15	12	12	6	8.0	7	8.0	6	13.0	6	13.0	6	8.0	7	8.0	7	7.0	5	11.5	0	5	7.0	4	14.0	0.38	0.95	0.38	0.40	0.40	0.22	0.33	0.37	0.21	0.19	180	180	203	215
	10'-5"	13	16	13	12	6	7.5	6	6.0	7	16.0	7	16.0	6	8.0	6	6.0	7	7.5	5	11.5	0	5	7.5	4	14.0	0.35	0.95	0.37	0.39	0.36	0.20	0.35	0.38	0.23	0.22	181	180	204	216
	11'-11"	14	17	14	12	6	7.5	6	6.0	6	12.0	6	12.0	6	7.5	6	6.0	7	7.5	5	11.5	0	5	8.0	4	14.0	0.34	0.95	0.35	0.38	0.35	0.20	0.32	0.36	0.20	0.20	181	180	206	218
	13'-6"	15	18	14	12	6	7.5	6	6.0	6	12.0	6	12.0	6	7.5	6	6.0	7	8.0	5	11.5	0	5	7.0	4	14.0	0.34	0.94	0.35	0.38	0.36	0.20	0.34	0.39	0.23	0.23	181	180	208	220
	15'-1"	16	19	15	12	6	7.5	6	6.0	6	12.0	6	12.0	6	7.5	6	6.0	7	8.0	5	11.5	0	5	7.5	4	14.0	0.33	0.94	0.34	0.37	0.36	0.21	0.34	0.39	0.23	0.24	182	180	210	222
	16'-8"	17	20	15	12	6	7.0	6	6.0	7	16.0	7	16.0	6	7.0	7	8.0	7	8.0	5	11.5	0	5	7.0	4	14.0	0.35	0.93	0.34	0.37	0.35	0.21	0.36	0.41	0.25	0.27	182	180	212	224
	18'-2"	18	21	16	12	6	7.0	6	6.0	7	16.0	7	16.0	6	7.0	6	6.0	7	8.0	5	11.5	0	5	7.0	4	14.0	0.33	0.93	0.33	0.37	0.35	0.21	0.36	0.41	0.26	0.27	182	180	214	226
	19'-9"	19	22	16	12	6	7.0	7	8.0	7	16.0	7	16.0	6	7.0	7	7.5	7	8.0	5	11.5	0	5	7.0	4	14.0	0.35	0.93	0.33	0.37	0.38	0.23	0.36	0.41	0.25	0.27	182	180	216	228
	21'-4"	20	23	17	12	6	7.0	6	6.0	7	16.0	7	16.0	6	7.0	7	8.0	7	7.0	5	11.5	0	5	7.0	4	14.0	0.35	0.92	0.33	0.37	0.35	0.22	0.36	0.41	0.25	0.27	183	180	218	230
	22'-10"	21	23	17	12	6	7.0	7	7.5	7	15.5	7	15.5	6	6.5	7	7.5	7	7.0	5	11.5	0	5	7.0	4	14.0	0.34	0.92	0.33	0.37	0.37	0.24	0.36	0.41	0.25	0.27	183	180	219	231
	24'-5"	22	24	18	12	6	7.0	6	6.0	7	15.5	7	15.5	6	6.5	7	7.5	7	7.0	5	11.5	0	5	7.0	4	14.0	0.34	0.91	0.33	0.36	0.35	0.22	0.35	0.41	0.25	0.27	183	180	221	233
	26'-0"	23	25	18	12	6	7.0	7	7.5	7	15.5	7	15.5	6	6.5	7	7.5	7	7.0	5	11.5	0	5	6.5	4	14.0	0.34	0.91	0.32	0.36	0.37	0.24	0.35	0.41	0.25	0.27	183	180	223	235
	27'-6"	24	26	19	12	6	7.0	7	8.0	7	15.5	7	15.5	6	6.5	7	7.5	7	7.0	5	11.5	0	5	7.0	4	14.0	0.35	0.91	0.32	0.36	0.37	0.25	0.35	0.41	0.25	0.27	184	180	225	237
	29'-2"	24	27	19	12	6	6.5	7	7.5	7	14.5	7	14.5	6	6.5	7	7.5	7	7.0	5	11.5	0	5	6.5	4	14.0	0.34	0.91	0.32	0.36	0.37	0.26	0.35	0.41	0.25	0.27	184	180	226	238
	30'-9"	25	28	20	12	6	6.5	7	7.5	7	14.5	7	14.5	6	6.5	7	7.5	7	7.0	5	11.5	0	5	6.5	4	14.0	0.35	0.90	0.32	0.36	0.38	0.25	0.35	0.41	0.25	0.27	184	180	228	240

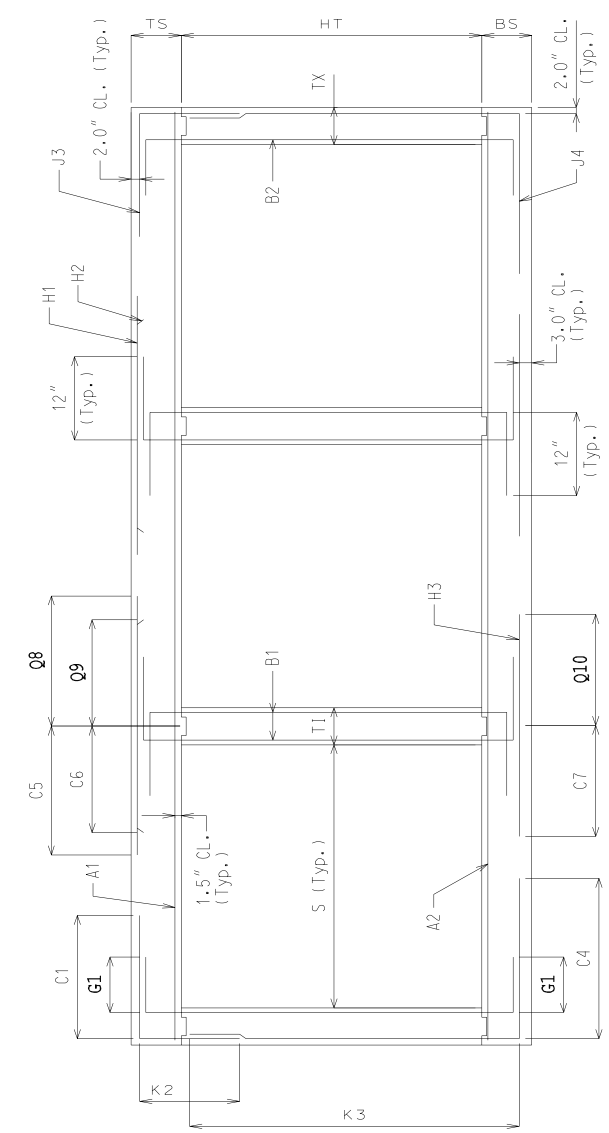

SECTION THRU BOX

NOTE: IF DESIGN FILL FALLS BETWEEN TABULATED FILLS, USE THE ADJACENT TABULATED FILL WHICH YIELDS THE GREATER MEMBER THICKNESS. IF THE MEMBER THICKNESSES ARE EQUAL, USE THE ADJACENT TABULATED FILL WHICH YIELDS THE GREATER AREA OF REINFORCEMENT.

SPECIAL DESIGNS ARE REQUIRED WHEN THE DESIGN FILL IS OUTSIDE THE RANGE OF TABULATED FILLS.

ALL DIMENSIONS ARE IN inch UNLESS OTHERWISE SPECIFIED.

COEFFICIENTS: DIMENSIONS MARKED WITH C# OR K# ARE THE PRODUCT OF THE COEFFICIENT AND ITS ASSOCIATED MULTIPLIER.

DESIGN FILL HEIGHT GIVEN IN THE TABLES IS THE HEIGHT FROM THE TOP OF THE EARTH FILL OR ROADWAY TO THE TOP OF THE TOP SLAB.

ALL CULVERTS MEET STRENGTH REQUIREMENTS FOR MILITARY 24 kips TANDEM AXLE LOADING.

MISSOURI HIGHWAY AND TRANSPORTATION COMMISSION

CONCRETE TRIPLE BOX CULVERT

MEMBER SIZES AND REINFORCEMENT

(HS20 & HS20 MOD. LOADING)

DATE: EFFECTIVE: 04-01-2002 **703.85B**

Loading	DESIGN FILL (ft-in)	TS Thick	BS Thick.	TX Thick	TI Thick.	A1 Size	A1 Bars c to c	J3 Size	J3 Bars c to c	H1 Size	H1 Bars c to c	H2 Size	H2 Bars c to c	A2 Size	A2 Bars c to c	J4 Size	J4 Bars c to c	H3 Size	H3 Bars c to c	B1 Size	B1 Bars c to c	G1	B2 Size	B2 Bars c to c	F Size	F Bars c to c	J4 C4	J4 K3	H3 C7	H3 Q10	J3 C1	J3 K2	H1 C5	H1 Q8	H2 C6	H2 Q9	"C" Multiplier S = 15 ft (in)	"Q" Multiplier S = 15 ft (in)	"K" Multiplier HT = 12 ft (in)	"K" Multiplier HT = 13 ft (in)	"K" Multiplier HT = 14 ft (in)
	Span (S) = 15 ft; HT (ft) = 12 or 13 or 14					TOP SLAB BARS								BOTTOM SLAB BARS						WALL BARS							COEFFICIENTS (see note)														
HS20	0'-8"	12	12	11	11	6	6.0	6	7.0	6	15.0	6	15.0	5	7.5	6	6.0	7	6.5	5	6.0	16	5	9.0	4	14.0	0.45	0.95	0.50	0.59	0.40	0.24	0.79	0.57	0.25	0.25	191	191	163	175	187
HS20	2'-2"	13	13	11	11	7	7.5	6	6.0	6	12.5	6	12.5	5	6.0	6	6.0	7	6.0	6	8.5	16	5	11.5	4	14.0	0.38	0.94	0.49	0.51	0.50	0.24	0.79	0.57	0.24	0.26	191	191	165	177	189
HS20	3'-11"	12	12	11	11	6	7.0	6	7.0	6	14.0	6	14.0	6	8.5	6	7.0	7	6.0	5	9.0	16	5	11.5	4	14.0	0.34	0.95	0.40	0.44	0.39	0.24	0.39	0.57	0.22	0.23	191	191	163	175	187
HS20	5'-7"	12	13	11	11	6	7.0	6	7.0	6	12.5	6	12.5	6	8.0	6	6.5	7	6.5	5	10.5	16	5	11.5	4	14.0	0.31	0.95	0.38	0.42	0.35	0.24	0.36	0.44	0.21	0.21	191	191	164	176	188
HS20	7'-2"	12	14	11	11	6	7.0	6	6.5	7	15.0	7	15.0	6	7.5	6	6.5	7	7.0	5	11.5	16	5	11.5	4	14.0	0.30	0.95	0.37	0.40	0.32	0.24	0.36	0.42	0.22	0.22	191	191	165	177	189
HS20 MOD	0'-7"	13	13	11	11	7	7.0	6	7.0	6	14.0	6	14.0	5	7.0	7	7.0	7	6.0	6	7.0	16	5	7.0	4	14.0	0.48	0.94	0.53	0.59	0.40	0.24	0.79	0.57	0.26	0.27	191	191	165	177	189
HS20 MOD	2'-2"	13	13	11	11	7	6.5	7	7.5	7	16.0	7	16.0	6	7.5	7	7.0	8	7.0	6	7.0	16	5	11.0	4	14.0	0.40	0.94	0.52	0.62	0.43	0.29	0.81	0.59	0.27	0.29	191	191	165	177	189
HS20 MOD	3'-11"	12	13	11	11	6	6.5	6	6.5	6	12.5	6	12.5	6	8.0	6	6.0	8	7.0	5	7.0	16	5	11.5	4	14.0	0.34	0.95	0.45	0.48	0.40	0.24	0.41	0.57	0.22	0.23	191	191	164	176	188
HS20 MOD	5'-7"	12	14	11	11	6	6.5	6	6.0	7	15.5	7	15.5	6	7.5	6	6.0	7	6.0	5	8.5	16	5	11.5	4	14.0	0.31	0.95	0.40	0.43	0.36	0.24	0.39	0.49	0.23	0.23	191	191	165	177	189
HS20 MOD	7'-1"	13	15	11	11	6	7.0	6	6.0	7	16.0	7	16.0	6	7.0	6	6.0	7	6.0	5	11.0	16	5	11.0	4	14.0	0.30	0.94	0.38	0.42	0.33	0.24	0.37	0.46	0.23	0.23	191	191	167	179	191
HS20 or HS20 MOD	8'-9"	13	15	11	11	6	7.0	7	8.0	7	15.5	7	15.5	6	7.0	6	6.5	7	6.5	5	11.5	0	5	11.0	4	14.0	0.29	0.94	0.37	0.40	0.33	0.26	0.34	0.39	0.22	0.21	191	191	167	179	191
HS20 or HS20 MOD	10'-4"	14	16	11	11	6	7.0	7	7.5	7	15.5	7	15.5	6	7.0	6	6.0	7	6.5	5	11.5	0	5	10.0	4	14.0	0.28	0.94	0.35	0.40	0.31	0.25	0.34	0.39	0.22	0.22	191	191	169	181	193
HS20 or HS20 MOD	11'-10"	15	17	12	11	6	6.5	6	6.0	7	15.0	7	15.0	6	7.0	6	6.5	7	7.0	5	11.5	0	5	11.0	4	14.0	0.28	0.93	0.34	0.39	0.31	0.25	0.36	0.41	0.25	0.25	192	191	171	183	195
HS20 or HS20 MOD	13'-5"	16	19	12	11	6	6.5	7	8.0	7	15.0	7	15.0	6	7.0	6	6.0	7	7.0	5	11.5	0	5	9.5	4	14.0	0.27	0.93	0.34	0.38	0.32	0.25	0.36	0.41	0.25	0.25	192	191	174	186	198
HS20 or HS20 MOD	15'-0"	17	20	13	11	6	6.5	6	6.0	7	15.0	7	15.0	6	6.5	6	6.5	7	7.0	5	11.5	0	5	10.5	4	14.0	0.27	0.92	0.33	0.38	0.30	0.25	0.36	0.41	0.25	0.26	192	191	176	188	200
HS20 or HS20 MOD	16'-7"	18	21	13	11	6	6.5	6	6.0	7	14.5	7	14.5	6	6.5	6	6.0	7	7.0	5	11.5	0	5	9.0	4	14.0	0.26	0.92	0.32	0.37	0.29	0.25	0.35	0.41	0.25	0.26	192	191	178	190	202
HS20 or HS20 MOD	18'-1"	19	22	14	11	6	6.5	6	6.0	7	14.5	7	14.5	6	6.5	6	6.5	7	7.0	5	11.5	0	5	9.5	4	14.0	0.27	0.92	0.32	0.37	0.29	0.26	0.35	0.41	0.24	0.26	193	191	180	192	204
HS20 or HS20 MOD	19'-8"	20	23	14	11	6	6.5	6	6.0	7	14.5	7	14.5	6	6.5	6	6.0	7	7.0	5	11.5	0	5	9.0	4	14.0	0.26	0.91	0.32	0.37	0.29	0.26	0.35	0.41	0.24	0.26	193	191	182	194	206
HS20 or HS20 MOD	21'-3"	21	24	15	11	6	6.0	6	6.0	7	14.5	7	14.5	6	6.5	6	6.5	7	7.0	5	11.5	0	5	9.0	4	14.0	0.26	0.91	0.32	0.37	0.29	0.26	0.35	0.41	0.24	0.26	193	191	184	196	208
HS20 or HS20 MOD	22'-9"	22	25	15	11	6	6.0	6	6.0	7	14.0	7	14.0	6	6.0	6	6.0	7	7.0	5	11.5	0	5	9.0	4	14.0	0.26	0.90	0.32	0.36	0.29	0.26	0.35	0.41	0.24	0.26	193	191	186	198	210
HS20 or HS20 MOD	24'-4"	23	26	16	11	6	6.0	6	6.0	7	14.0	7	14.0	6	6.0	6	6.5	7	7.0	5	11.5	0	5	9.0	4	14.0	0.26	0.90	0.31	0.36	0.29	0.27	0.35	0.41	0.24	0.26	194	191	188	200	212
HS20 or HS20 MOD	25'-11"	24	27	16	11	6	6.0	6	6.0	7	14.0	7	14.0	7	8.0	6	6.0	7	7.0	5	11.5	0	5	8.5	4	14.0	0.26	0.90	0.31	0.36	0.29	0.27	0.35	0.41	0.24	0.26	194	191	190	202	214
HS20 or HS20 MOD	27'-5"	25	28	17	11	6	6.0	6	6.0	7	13.5	7	13.5	7	8.0	6	6.5	7	6.5	5	11.5	0	5	9.0	4	14.0	0.26	0.89	0.31	0.36	0.29	0.27	0.34	0.41	0.24	0.26	194	191	192	204	216
HS20 or HS20 MOD	29'-0"	26	28	17	11	7	8.0	6	6.0	7	13.5	7	13.5	7	8.0	6	6.0	7	6.5	5	11.5	0	5	8.5	4	14.0	0.26	0.89	0.31	0.36	0.29	0.28	0.34	0.40	0.24	0.26	194	191	193	205	217
HS20 or HS20 MOD	30'-7"	27	29	17	11	7	8.0	6	6.0	7	13.5	7	13.5	7	7.5	6	6.0	7	6.5	5	11.5	0	5	7.5	4	14.0	0.26	0.89	0.31	0.36	0.29	0.28	0.34	0.40	0.24	0.26	194	191	195	207	219

Loading	DESIGN FILL (ft-in)	TS Thick	BS Thick.	TX Thick	TI Thick.	A1 Size	A1 Bars c to c	J3 Size	J3 Bars c to c	H1 Size	H1 Bars c to c	H2 Size	H2 Bars c to c	A2 Size	A2 Bars c to c	J4 Size	J4 Bars c to c	H3 Size	H3 Bars c to c	B1 Size	B1 Bars c to c	G1	B2 Size	B2 Bars c to c	F Size	F Bars c to c	J4 C4	J4 K3	H3 C7	H3 Q10	J3 C1	J3 K2	H1 C5	H1 Q8	H2 C6	H2 Q9	"C" Multiplier S = 15 ft (in)	"Q" Multiplier S = 15 ft (in)	"K" Multiplier HT = 15 ft (in)	"K" Multiplier HT = 16 ft (in)
	SPAN (S) = 15 ft; HT (ft) = 15 or 16					TOP SLAB BARS								BOTTOM SLAB BARS						WALL BARS							COEFFICIENTS (see note)													
HS20	0'-8"	12	12	12	12	6	6.0	6	7.0	6	14.5	6	14.5	5	7.0	7	7.0	7	6.0	5	6.5	16	5	9.0	4	14.0	0.50	0.95	0.51	0.51	0.41	0.20	0.79	0.57	0.25	0.25	192	192	199	211
HS20	2'-3"	12	13	12	12	7	7.5	6	6.0	6	12.0	6	12.0	6	8.0	7	7.5	8	7.0	5	6.0	16	5	8.5	4	14.0	0.44	0.95	0.52	0.52	0.41	0.20	0.79	0.57	0.24	0.25	192	192	200	212
HS20	3'-11"	12	13	12	12	6	7.0	6	7.0	6	13.5	6	13.5	6	8.0	6	6.0	7	6.0	5	9.5	16	5	9.0	4	14.0	0.38	0.95	0.41	0.43	0.45	0.20	0.39	0.57	0.22	0.22	192	192	200	212
HS20	5'-7"	12	13	12	12	6	7.0	6	6.0	6	12.5	6	12.5	6	7.5	7	8.0	7	6.5	5	11.0	16	5	8.5	4	14.0	0.36	0.95	0.39	0.41	0.39	0.20	0.36	0.43	0.21	0.21	192	192	200	212
HS20	7'-2"	12	14	12	12	6	7.0	6	6.0	7	15.0	7	15.0	6	7.0	7	7.5	7	7.0	5	11.5	16	5	8.0	4	14.0	0.36	0.95	0.37	0.40	0.37	0.20	0.36	0.41	0.23	0.22	192	192	201	213
HS20 MOD	0'-6"	14	13	12	12	7	7.0	6	6.5	6	14.0	6	14.0	5	7.0	7	7.0	7	6.0	6	8.0	16	5	7.0	4	14.0	0.51	0.95	0.54	0.59	0.41	0.20	0.79	0.57	0.26	0.27	192	192	202	214
HS20 MOD	2'-2"	13	13	12	12	7	6.5	7	7.0	7	16.0	7	16.0	6	7.5	7	7.0	8	7.0	6	7.5	16	5	8.5	4	14.0	0.44	0.95	0.52	0.54	0.43	0.24	0.81	0.59	0.27	0.29	192	192	201	213
HS20 MOD	3'-11"	12	13	12	12	6	6.5	6	6.0	6	12.5	6	12.5	6	8.0	6	6.0	7	6.0	5	7.5	16	5	8.5	4	14.0	0.38	0.95	0.43	0.46	0.46	0.20	0.40	0.57	0.22	0.22	192	192	200	212
HS20 MOD	5'-7"	12	14	12	12	6	7.0	6	6.0	7	15.5	7	15.5	6	7.5	7	8.0	7	6.5	5	9.0	16	5	8.5	4	14.0	0.38	0.95	0.41	0.43	0.40	0.20	0.39	0.47	0.24	0.23	192	192	201	213
HS20 MOD	7'-1"	13	15	12	12	6	7.0	7	7.5	7	16.0	7	16.0	6	7.5	7	7.5	7	7.0	5	11.5	16	5	8.0	4	14.0	0.36	0.95	0.39	0.41	0.40	0.23	0.37	0.45	0.23	0.23	192	192	203	215
HS20 or HS20 MOD	8'-9"	13	16	12	12	6	7.0	7	7.5	7	15.0	7	15.0	6	7.5	7	7.5	7	7.0	5	11.5	0	5	7.5	4	14.0	0.35	0.95	0.37	0.40	0.37	0.22	0.35	0.38	0.22	0.21	192	192	204	216
HS20 or HS20 MOD	10'-4"	14	17	13	12	6	7.0	7	7.5	7	15.0	7	15.0	6	7.0	6	6.0	7	7.0	5	11.5	0	5	8.0	4	14.0	0.32	0.95	0.36	0.39	0.36	0.24	0.34	0.38	0.22	0.22	193	192	206	218
HS20 or HS20 MOD	11'-10"	15	18	14	12	6	7.0	6	6.0	7	15.0	7	15.0	6	7.0	6	6.0	7	7.0	5	11.5	0	5	8.5	4	14.0	0.31	0.94	0.35	0.38	0.35	0.20	0.36	0.41	0.25	0.25	193	192	208	220
HS20 or HS20 MOD	13'-5"	16	19	14	12	6	7.0	7	7.5	7	15.0	7	15.0	6	7.0	7	8.0	7	7.0	5	11.5	0	5	7.5	4	14.0	0.33	0.94	0.34	0.37	0.36	0.24	0.36	0.41	0.25	0.25	193	192	210	222
HS20 or HS20 MOD	15'-0"	17	20	15	12	6	7.0	6	6.0	7	15.0	7	15.0	6	7.0	6	6.0	7	7.0	5	11.5	0	5	8.0	4	14.0	0.31	0.93	0.33	0.37	0.33	0.21	0.36	0.41	0.25	0.26	194	192	212	224
HS20 or HS20 MOD	16'-7"	18	21	15	12	6	7.0	7	7.5	7	14.5	7	14.5	6	7.0	7	7.5	7	7.0	5	11.5	0	5	7.5	4	14.0	0.32	0.93	0.33	0.37	0.35	0.25	0.36	0.41	0.25	0.26	194	192	214	226
HS20 or HS20 MOD	18'-1"	19	22	16	12	6	6.5	7	8.0	7	14.5	7	14.5	6	6.5	7	8.0	7	7.0	5	11.5	0	5	7.5	4	14.0	0.32	0.93	0.32	0.36	0.35	0.23	0.35	0.41	0.25	0.26	194	192	216	228
HS20 or HS20 MOD	19'-8"	20	23	16	12	6	6.5	7	7.5	7	14.5	7	14.5	6	6.5	7	7.5	7	7.0	5	11.5	0	5	7.0	4	14.0	0.32	0.92	0.32	0.36	0.35	0.25	0.35	0.41	0.25	0.26	194	192	218	230
HS20 or HS20 MOD	21'-3"	21	24	17	12	6	6.5	7	8.0	7	14.5	7	14.5	6	6.5	7	7.5	7	7.0	5	11.5	0	5	7.0	4	14.0	0.32	0.92	0.32	0.36	0.35	0.24	0.35	0.40	0.24	0.26	195	192	220	232
HS20 or HS20 MOD	22'-9"	22	25	17	12	6	6.5	7	7.5	7	14.5	7	14.5	6	6.0	7	7.5	7	7.0	5	11.5	0	5	7.0	4	14.0	0.32	0.92	0.32	0.36	0.35	0.25	0.35	0.40	0.24	0.26	195	192	222	234
HS20 or HS20 MOD	24'-4"	23	26	18	12	6	6.5	7	7.5	7	14.0	7	14.0	6	6.0	7	7.5	7	7.0	5	11.5	0	5	7.0	4	14.0	0.32	0.91	0.32	0.36	0.35	0.24	0.35	0.40	0.24	0.26	195	192	224	236
HS20 or HS20 MOD	25'-11"	24	27	18	12	6	6.0	7	7.5	7	14.0	7	14.0	6	6.0	7	7.5	7	7.0	5	11.5	0	5	7.0	4	14.0	0.32	0.91	0.31	0.36	0.35	0.26	0.35	0.40	0.24	0.26	195	192	226	238
HS20 or HS20 MOD	27'-5"	25	28	19	12	6	6.0	7	7.5	7	14.0	7	14.0	6	6.0	7	7.5	7	7.0	5	11.5	0	5	7.0	4	14.0	0.32	0.90	0.31	0.35	0.35	0.25	0.34	0.40	0.24	0.26	196	192	228	240
HS20 or HS20 MOD	29'-0"	26	29	19	12	6	6.0	7	7.5	7	13.5	7	13.5	6	6.0	7	7.5	7	7.0	5	11.5	0	5	6.5	4	14.0	0.32	0.90	0.31	0.35	0.35	0.26	0.34	0.40	0.24	0.26	196	192	230	242
HS20 or HS20 MOD	30'-7"	27	30	20	12	6	6.0	7	7.5	7	13.5	7	13.5	7	8.0	7	7.5	7	7.0	5	11.5	0	5	7.0	4	14.0	0.32	0.90	0.31	0.35	0.35	0.25	0.34	0.40	0.24	0.26	196	192	232	244

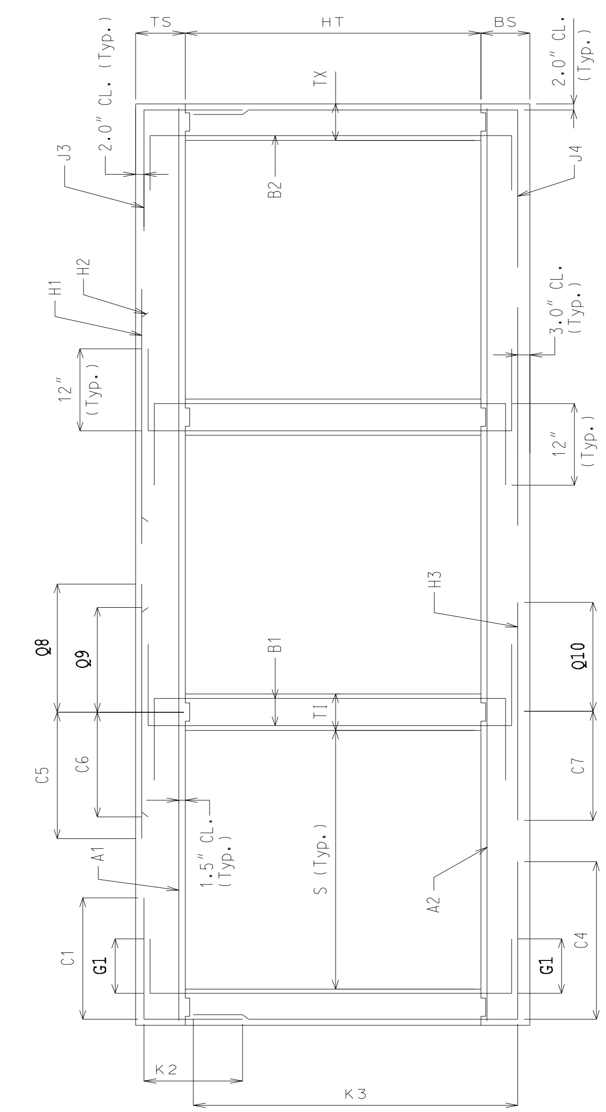

SECTION THRU BOX

NOTE: IF DESIGN FILL FALLS BETWEEN TABULATED FILLS, USE THE ADJACENT TABULATED FILL WHICH YIELDS THE GREATER MEMBER THICKNESS. IF THE MEMBER THICKNESSES ARE EQUAL, USE THE ADJACENT TABULATED FILL WHICH YIELDS THE GREATER AREA OF REINFORCEMENT.

SPECIAL DESIGNS ARE REQUIRED WHEN THE DESIGN FILL IS OUTSIDE THE RANGE OF TABULATED FILLS.

ALL DIMENSIONS ARE IN inch UNLESS OTHERWISE SPECIFIED.

COEFFICIENTS: DIMENSIONS MARKED WITH C# OR K# ARE THE PRODUCT OF THE COEFFICIENT AND ITS ASSOCIATED MULTIPLIER.

DESIGN FILL HEIGHT GIVEN IN THE TABLES IS THE HEIGHT FROM THE TOP OF THE EARTH FILL OR ROADWAY TO THE TOP OF THE TOP SLAB.

ALL CULVERTS MEET STRENGTH REQUIREMENTS FOR MILITARY 24 kips TANDEM AXLE LOADING.

MISSOURI HIGHWAY AND TRANSPORTATION COMMISSION

CONCRETE TRIPLE BOX CULVERT

MEMBER SIZES AND REINFORCEMENT

(HS20 & HS20 MOD. LOADING)

DATE: EFFECTIVE: 04-01-2002 **703.85B**

Span (S) = 16 ft
HT (ft) = 13 or 14

	DESIGN FILL	MEMBER THICKNESSES				TOP SLAB BARS								BOTTOM SLAB BARS						WALL BARS						COEFFICIENTS (see note)										"C" Multiplier	"Q" Multiplier	"K" Multiplier	
		TS	BS	TX	TI	A1	Bars	J3	Bars	H1	Bars	H2	Bars	A2	Bars	J4	Bars	H3	Bars	B1	Bars	B2	Bars	F	Bars	J4		H3		J3		H1		H2		S = 16 ft	S = 16 ft	HT = 13 ft	HT = 14 ft
	(ft-in)	Thick	Thick.	Thick	Thick.	Size	c to c	Size	c to c	Size	c to c	Size	c to c	Size	c to c	Size	c to c	Size	c to c	Size	c to c	G1	Size	c to c	Size	c to c	C4	K3	C7	Q10	C1	K2	C5	Q8	C6	Q9	in	in	in	in
HS20	0'-7"	13	13	11	11	6	6.0	6	7.0	6	15.5	6	15.5	5	7.5	7	8.0	7	7.0	5	6.0	16	5	8.5	4	14.0	0.43	0.94	0.50	0.59	0.40	0.23	0.78	0.57	0.25	0.25	203	203	177	189
HS20	2'-2"	13	13	11	11	7	7.0	6	6.0	6	12.5	6	12.5	6	8.0	7	7.5	8	7.0	6	8.5	16	5	11.5	4	14.0	0.38	0.94	0.49	0.52	0.49	0.23	0.51	0.57	0.24	0.25	203	203	177	189
HS20	3'-10"	13	13	11	11	6	7.0	6	7.0	6	14.0	6	14.0	6	8.5	6	6.5	7	6.5	5	9.0	16	5	11.5	4	14.0	0.32	0.94	0.40	0.44	0.37	0.23	0.38	0.57	0.22	0.23	203	203	177	189
HS20	5'-6"	13	14	11	11	6	7.0	6	6.5	6	12.5	6	12.5	6	7.5	6	6.5	7	6.5	5	10.0	16	5	11.5	4	14.0	0.29	0.94	0.38	0.42	0.33	0.23	0.35	0.44	0.20	0.21	203	203	178	190
HS20	7'-1"	13	15	11	11	6	7.0	6	6.0	7	14.5	7	14.5	6	7.0	6	6.5	7	6.5	5	11.5	16	5	11.5	4	14.0	0.28	0.94	0.36	0.40	0.30	0.22	0.35	0.41	0.22	0.22	203	203	179	191
HS20 MOD	0'-6"	14	13	11	11	7	7.0	6	6.5	6	14.5	6	14.5	5	7.0	7	7.0	8	7.5	6	7.5	16	5	6.5	4	14.0	0.45	0.94	0.53	0.61	0.40	0.23	0.78	0.57	0.26	0.27	203	203	178	190
HS20 MOD	2'-1"	14	14	11	11	7	6.5	7	7.0	7	16.0	7	16.0	6	7.5	7	7.0	8	7.0	6	7.0	16	5	9.0	4	14.0	0.38	0.94	0.51	0.61	0.42	0.27	0.80	0.59	0.27	0.29	203	203	179	191
HS20 MOD	3'-11"	12	13	11	11	7	8.0	6	6.0	7	15.0	7	15.0	6	7.5	6	6.0	8	7.0	5	7.0	16	5	11.5	4	14.0	0.32	0.95	0.45	0.49	0.38	0.22	0.41	0.59	0.24	0.24	203	203	176	188
HS20 MOD	5'-6"	13	14	11	11	6	6.0	6	6.0	7	15.5	7	15.5	6	7.0	6	6.0	8	7.5	5	8.5	16	5	11.5	4	14.0	0.29	0.94	0.42	0.46	0.34	0.23	0.38	0.49	0.23	0.23	203	203	178	190
HS20 MOD	7'-1"	13	15	11	11	6	6.0	7	7.5	7	14.0	7	14.0	6	7.0	6	6.0	7	6.0	5	9.5	16	5	11.5	4	14.0	0.28	0.94	0.37	0.41	0.31	0.26	0.36	0.43	0.22	0.22	203	203	179	191
HS20 or HS20 MOD	8'-8"	14	16	11	11	6	6.0	7	7.5	7	14.5	7	14.5	6	7.0	6	6.0	7	6.0	5	11.5	0	5	11.5	4	14.0	0.27	0.94	0.36	0.40	0.31	0.27	0.33	0.39	0.21	0.21	203	203	181	193
HS20 or HS20 MOD	10'-3"	15	17	11	11	6	6.5	7	7.5	7	14.5	7	14.5	6	6.5	6	6.0	7	6.5	5	11.5	0	5	10.5	4	14.0	0.26	0.93	0.35	0.39	0.32	0.25	0.36	0.41	0.24	0.24	203	203	183	195
HS20 or HS20 MOD	11'-9"	16	18	12	11	6	6.5	7	8.0	7	14.5	7	14.5	6	6.5	6	6.0	7	6.5	5	11.5	0	5	11.5	4	14.0	0.26	0.93	0.34	0.38	0.31	0.26	0.35	0.41	0.24	0.24	204	203	185	197
HS20 or HS20 MOD	13'-4"	17	19	12	11	6	6.0	7	7.5	7	14.5	7	14.5	6	6.0	6	6.0	7	6.5	5	11.5	0	5	10.5	4	14.0	0.25	0.92	0.33	0.38	0.30	0.26	0.35	0.41	0.24	0.25	204	203	187	199
HS20 or HS20 MOD	14'-11"	18	21	13	11	6	6.0	6	6.0	7	14.0	7	14.0	6	6.5	6	6.5	7	7.0	5	11.5	0	5	11.0	4	14.0	0.25	0.92	0.32	0.37	0.28	0.24	0.35	0.41	0.24	0.25	204	203	190	202
HS20 or HS20 MOD	16'-6"	19	22	13	11	6	6.0	7	8.0	7	13.5	7	13.5	6	6.0	6	6.0	7	7.0	5	11.5	0	5	9.5	4	14.0	0.25	0.92	0.32	0.37	0.29	0.26	0.35	0.41	0.24	0.25	204	203	192	204
HS20 or HS20 MOD	18'-0"	20	23	14	11	6	6.0	6	6.0	7	13.5	7	13.5	6	6.0	6	6.0	7	7.0	5	11.5	0	5	10.5	4	14.0	0.25	0.91	0.32	0.36	0.27	0.24	0.34	0.40	0.23	0.25	205	203	194	206
HS20 or HS20 MOD	19'-7"	21	24	14	11	7	8.0	7	8.0	7	13.0	7	13.0	6	6.0	6	6.0	7	6.5	5	11.5	0	5	9.0	4	14.0	0.24	0.91	0.31	0.36	0.29	0.27	0.34	0.40	0.23	0.25	205	203	196	208
HS20 or HS20 MOD	21'-1"	23	25	15	11	6	6.0	6	6.0	7	14.0	7	14.0	7	8.0	6	6.0	7	6.5	5	11.5	0	5	9.5	4	14.0	0.24	0.90	0.31	0.36	0.27	0.25	0.34	0.40	0.23	0.25	205	203	199	211
HS20 or HS20 MOD	22'-7"	24	26	15	11	6	6.0	6	6.0	7	13.5	7	13.5	7	8.0	6	6.0	7	6.5	5	11.5	0	5	9.0	4	14.0	0.24	0.90	0.31	0.36	0.27	0.25	0.34	0.40	0.23	0.25	205	203	201	213
HS20 or HS20 MOD	24'-2"	25	27	16	11	7	8.0	6	6.0	7	13.0	7	13.0	7	7.5	6	6.0	7	6.5	5	11.5	0	5	9.0	4	14.0	0.25	0.89	0.31	0.36	0.27	0.26	0.34	0.40	0.23	0.25	206	203	203	215
HS20 or HS20 MOD	25'-9"	26	28	16	11	7	8.0	6	6.0	7	13.0	7	13.0	7	7.5	6	6.0	7	6.5	5	11.5	0	5	8.5	4	14.0	0.24	0.89	0.31	0.36	0.27	0.26	0.34	0.40	0.23	0.25	206	203	205	217
HS20 or HS20 MOD	27'-3"	27	29	17	11	7	7.5	6	6.0	7	13.0	7	13.0	7	7.5	6	6.0	7	6.0	5	11.5	0	5	9.0	4	14.0	0.25	0.89	0.31	0.36	0.27	0.26	0.33	0.40	0.23	0.25	206	203	207	219
HS20 or HS20 MOD	28'-10"	28	30	17	11	7	7.5	6	6.0	7	12.5	7	12.5	7	7.0	6	6.0	7	6.0	5	11.5	0	5	8.5	4	14.0	0.24	0.88	0.30	0.36	0.27	0.26	0.33	0.40	0.23	0.25	206	203	209	221
HS20 or HS20 MOD	30'-5"	29	31	17	11	7	7.5	6	6.0	7	12.5	7	12.5	7	7.0	6	6.0	7	6.0	5	11.5	0	5	7.5	4	14.0	0.24	0.88	0.30	0.35	0.27	0.27	0.33	0.40	0.23	0.25	206	203	211	223

SPAN (S) = 16 ft
HT (ft) = 15 or 16

	DESIGN FILL	MEMBER THICKNESSES				TOP SLAB BARS								BOTTOM SLAB BARS						WALL BARS						COEFFICIENTS (see note)										"C" Multiplier	"Q" Multiplier	"K" Multiplier	
		TS	BS	TX	TI	A1	Bars	J3	Bars	H1	Bars	H2	Bars	A2	Bars	J4	Bars	H3	Bars	B1	Bars	B2	Bars	F	Bars	J4		H3		J3		H1		H2		S = 16 ft	S = 16 ft	HT = 15 ft	HT = 16 ft
	(ft-in)	Thick	Thick.	Thick	Thick.	Size	c to c	Size	c to c	Size	c to c	Size	c to c	Size	c to c	Size	c to c	Size	c to c	Size	c to c	G1	Size	c to c	Size	c to c	C4	K3	C7	Q10	C1	K2	C5	Q8	C6	Q9	in	in	in	in
HS20	0'-7"	13	13	12	12	6	6.0	6	7.0	6	15.0	6	15.0	5	7.0	7	7.5	7	6.5	5	6.5	16	5	9.0	4	14.0	0.49	0.95	0.50	0.59	0.40	0.20	0.78	0.57	0.24	0.24	204	204	201	213
HS20	2'-2"	13	13	12	12	7	7.5	7	8.0	6	12.5	6	12.5	6	8.0	7	7.0	8	7.0	5	6.0	16	5	9.0	4	14.0	0.41	0.95	0.49	0.51	0.42	0.24	0.78	0.57	0.23	0.25	204	204	201	213
HS20	3'-10"	13	13	12	12	6	7.0	6	6.5	6	13.5	6	13.5	6	8.0	6	6.0	7	6.0	5	9.5	16	5	9.0	4	14.0	0.36	0.95	0.40	0.43	0.42	0.20	0.39	0.57	0.22	0.22	204	204	201	213
HS20	5'-6"	13	14	12	12	6	7.0	6	6.0	6	12.5	6	12.5	6	7.5	6	6.0	7	6.5	5	10.5	16	5	9.0	4	14.0	0.33	0.95	0.38	0.41	0.37	0.20	0.35	0.43	0.21	0.21	204	204	202	214
HS20	7'-1"	13	15	12	12	6	7.0	7	7.5	7	14.5	7	14.5	6	7.0	7	7.5	7	6.5	5	11.5	16	5	8.5	4	14.0	0.34	0.95	0.37	0.40	0.36	0.23	0.36	0.41	0.22	0.22	204	204	203	215
HS20 MOD	0'-6"	14	13	12	12	7	7.0	6	6.0	6	14.5	6	14.5	5	6.5	7	7.0	8	7.5	6	8.0	16	5	7.0	4	14.0	0.49	0.94	0.53	0.61	0.40	0.20	0.78	0.57	0.26	0.27	204	204	202	214
HS20 MOD	2'-1"	14	14	12	12	7	6.5	7	7.0	7	16.0	7	16.0	6	7.5	7	7.0	8	7.0	6	8.0	16	5	9.0	4	14.0	0.42	0.94	0.51	0.61	0.42	0.24	0.80	0.59	0.26	0.29	204	204	203	215
HS20 MOD	3'-11"	12	13	12	12	7	8.0	7	8.0	7	14.5	7	14.5	6	7.0	7	7.5	8	7.0	5	7.0	16	5	9.0	4	14.0	0.38	0.95	0.45	0.48	0.43	0.23	0.42	0.59	0.24	0.23	204	204	200	212
HS20 MOD	5'-6"	13	14	12	12	6	6.0	7	7.5	7	15.5	7	15.5	6	7.0	7	7.5	8	7.5	5	9.0	16	5	9.0	4	14.0	0.35	0.95	0.42	0.45	0.40	0.23	0.38	0.47	0.23	0.23	204	204	202	214
HS20 MOD	7'-1"	13	15	12	12	6	6.0	7	7.0	7	14.0	7	14.0	6	7.0	7	7.5	7	6.0	5	10.0	16	5	8.5	4	14.0	0.34	0.95	0.38	0.40	0.37	0.23	0.36	0.42	0.22	0.22	204	204	203	215
HS20 or HS20 MOD	8'-8"	14	16	12	12	6	6.5	7	7.0	7	14.5	7	14.5	6	7.0	7	7.0	7	6.0	5	11.5	0	5	8.0	4	14.0	0.32	0.95	0.36	0.39	0.35	0.24	0.34	0.38	0.21	0.20	204	204	205	217
HS20 or HS20 MOD	10'-3"	15	17	13	12	6	6.5	7	7.5	7	14.5	7	14.5	6	6.5	7	7.5	7	6.0	5	11.5	0	5	8.5	4	14.0	0.32	0.94	0.35	0.39	0.36	0.24	0.36	0.41	0.24	0.24	205	204	207	219
HS20 or HS20 MOD	11'-9"	16	19	14	12	6	6.5	7	8.0	7	14.5	7	14.5	6	6.5	6	6.0	7	6.0	5	11.5	0	5	9.0	4	14.0	0.29	0.94	0.34	0.38	0.35	0.24	0.35	0.40	0.24	0.24	205	204	210	222
HS20 or HS20 MOD	13'-4"	17	20	14	12	6	6.5	7	7.5	7	14.5	7	14.5	6	6.5	7	7.5	7	7.0	5	11.5	0	5	8.5	4	14.0	0.31	0.93	0.33	0.37	0.34	0.24	0.35	0.40	0.24	0.25	205	204	212	224
HS20 or HS20 MOD	14'-11"	18	21	15	12	6	6.5	7	7.5	7	14.0	7	14.0	6	6.5	7	8.0	7	7.0	5	11.5	0	5	8.5	4	14.0	0.31	0.93	0.32	0.37	0.33	0.25	0.35	0.40	0.24	0.25	206	204	214	226
HS20 or HS20 MOD	16'-6"	19	22	15	12	6	6.0	7	7.5	7	14.0	7	14.0	6	6.0	7	7.5	7	7.0	5	11.5	0	5	7.5	4	14.0	0.30	0.93	0.32	0.36	0.33	0.25	0.35	0.40	0.24	0.25	206	204	216	228
HS20 or HS20 MOD	18'-0"	20	23	16	12	6	6.0	7	7.5	7	13.5	7	13.5	6	6.0	7	7.5	7	6.5	5	11.5	0	5	8.5	4	14.0	0.30	0.92	0.32	0.36	0.33	0.25	0.34	0.40	0.24	0.25	206	204	218	230
HS20 or HS20 MOD	19'-7"	21	24	16	12	6	6.0	7	7.0	7	13.0	7	13.0	6	6.0	7	7.5	7	6.5	5	11.5	0	5	7.5	4	14.0	0.30	0.92	0.31	0.36	0.33	0.25	0.34	0.40	0.24	0.25	206	204	220	232
HS20 or HS20 MOD	21'-1"	23	25	17	12	6	6.0	7	7.5	7	14.0	7	14.0	7	8.0	7	7.5	7	6.5	5	11.5	0	5	7.5	4	14.0	0.30	0.91	0.31	0.36	0.33	0.24	0.34	0.40	0.23	0.25	207	204	223	235
HS20 or HS20 MOD	22'-7"	24	26	17	12	6	6.0	7	7.5	7	13.5	7	13.5	7	8.0	7	7.0	7	6.5	5	11.5	0	5	7.0	4	14.0	0.30	0.91	0.31	0.36	0.32	0.26	0.34	0.40	0.23	0.25	207	204	225	237
HS20 or HS20 MOD	24'-2"	25	27	18	12	6	6.0	7	7.5	7	13.5	7	13.5	7	7.5	7	7.5	7	6.5	5	11.5	0	5	7.0	4	14.0	0.30	0.90	0.31	0.35	0.32	0.25	0.34	0.40	0.23	0.25	207	204	227	239
HS20 or HS20 MOD	25'-9"	26	28	18	12	7	8.0	7	7.5	7	13.0	7	13.0	7	7.5	7	7.0	7	6.5	5	11.5	0	5	7.0	4	14.0	0.30	0.90	0.31	0.35	0.32	0.26	0.34	0.40	0.23	0.25	207	204	229	241
HS20 or HS20 MOD	27'-3"	27	29	19	12	7	8.0	7	7.5	7	13.0	7	13.0	7	7.5	7	7.5	7	6.0	5	11.5	0	5	7.0	4	14.0	0.30	0.90	0.31	0.35	0.32	0.25	0.33	0.40	0.23	0.25	208	204	231	243
HS20 or HS20 MOD	28'-10"	28	30	19	12	7	8.0	7	7.0	7	13.0	7	13.0	7	7.0	7	7.0	7	6.0	5	11.5	0	5	7.0	4	14.0	0.30	0.89	0.31	0.35	0.32	0.27	0.33	0.40	0.23	0.25	208	204	233	245
HS20 or HS20 MOD	30'-5"	29	31	20	12	7	7.5	7	7.5	7	12.5	7	12.5	7	7.0	7	7.5	7	6.0	5	11.5	0	5	7.0	4	14.0	0.30	0.89	0.30	0.35	0.33	0.26	0.33	0.39	0.23	0.25	208	204	235	247

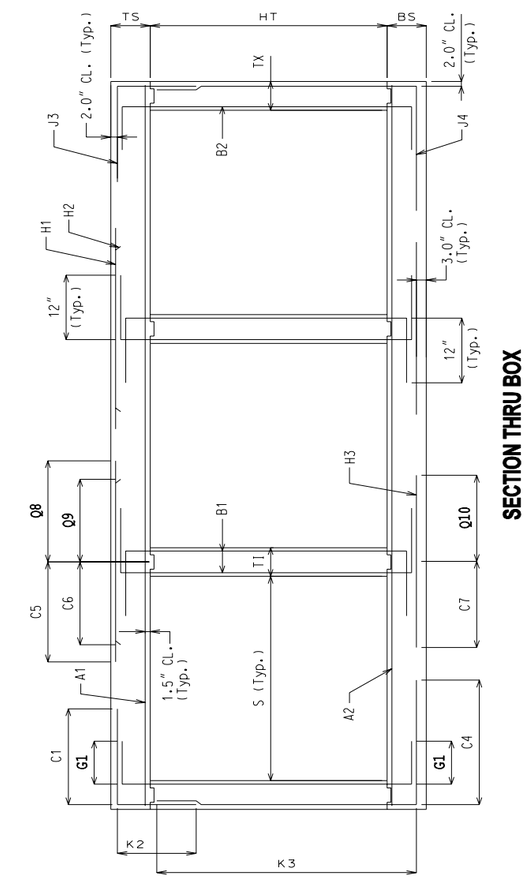

SECTION THRU BOX

NOTE: IF DESIGN FILL FALLS BETWEEN TABULATED FILLS, USE THE ADJACENT TABULATED FILL WHICH YIELDS THE GREATER MEMBER THICKNESS. IF THE MEMBER THICKNESSES ARE EQUAL, USE THE ADJACENT TABULATED FILL WHICH YIELDS THE GREATER AREA OF REINFORCEMENT.

SPECIAL DESIGNS ARE REQUIRED WHEN THE DESIGN FILL IS OUTSIDE THE RANGE OF TABULATED FILLS.

ALL DIMENSIONS ARE IN inch UNLESS OTHERWISE SPECIFIED.

COEFFICIENTS: DIMENSIONS MARKED WITH C# OR K# ARE THE PRODUCT OF THE COEFFICIENT AND ITS ASSOCIATED MULTIPLIER.

DESIGN FILL HEIGHT GIVEN IN THE TABLES IS THE HEIGHT FROM THE TOP OF THE EARTH FILL OR ROADWAY TO THE TOP OF THE TOP SLAB.

ALL CULVERTS MEET STRENGTH REQUIREMENTS FOR MILITARY 24 kips TANDEM AXLE LOADING.

MISSOURI HIGHWAY AND TRANSPORTATION COMMISSION

CONCRETE TRIPLE BOX CULVERT

MEMBER SIZES AND REINFORCEMENT

(HS20 & HS20 MOD. LOADING)

DATE: | EFFECTIVE: 04-01-2002 | 703.85B | 13/13