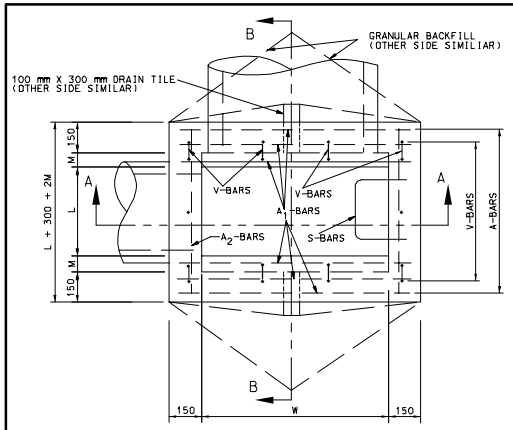

PLAN

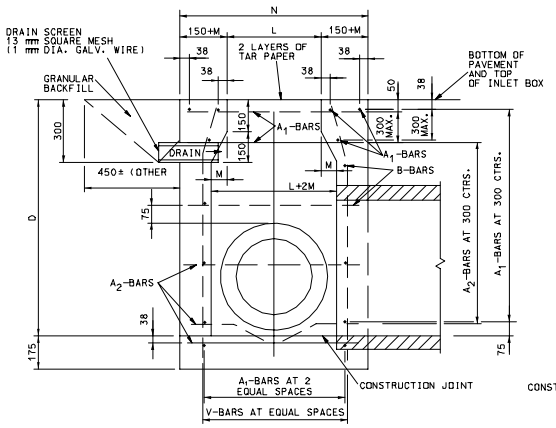

SECTION B-B

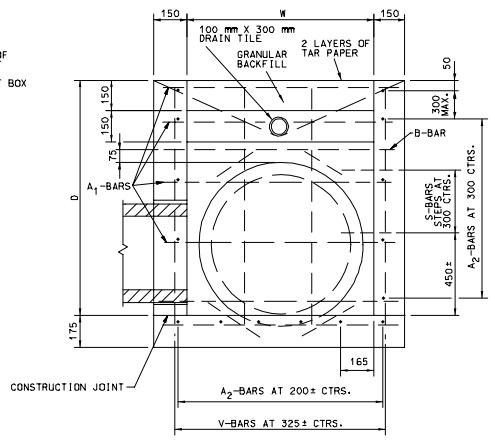

SECTION A-A

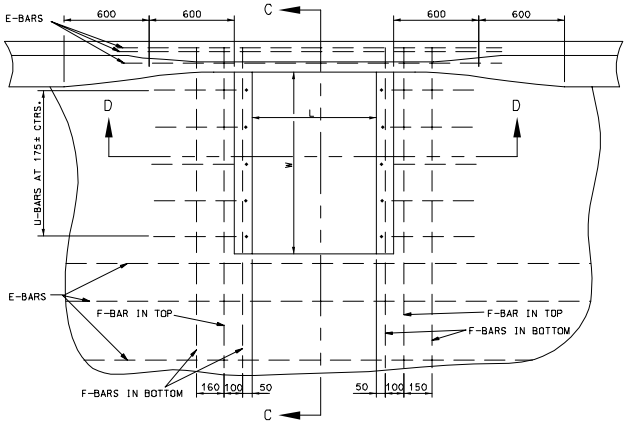

PLAN

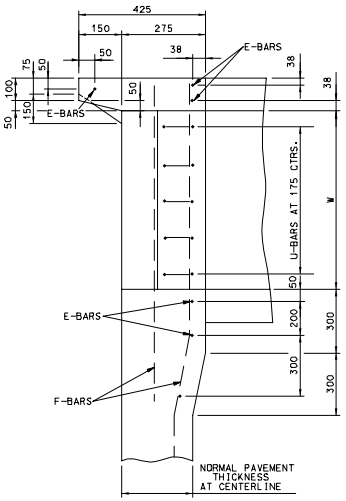

SECTION C-C

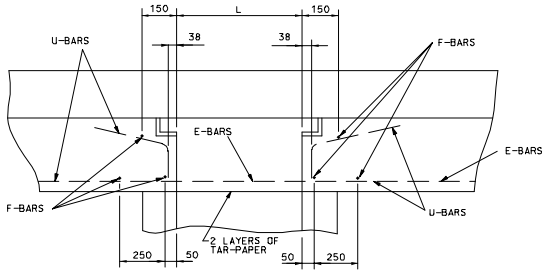

SECTION D-D

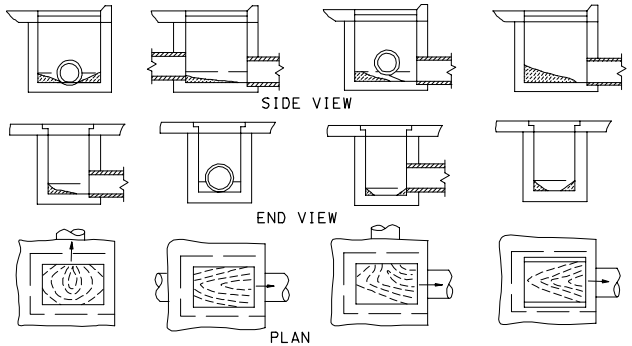

TYPICAL INVERTS

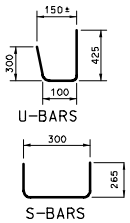

BENDING DIAGRAMS

BAR BILLS								
DEPTH "D" mm	MARK	600 × 900		600 × 1200		900 × 900		900 × 1200	
		NO.	LENGTH	NO.	LENGTH	NO.	LENGTH	NO.	LENGTH
ALL DEPTHS	E	6	1800	6	1800	6	1800	6	1800
	F	6	1650	6	1950	6	1650	6	1950
	U	10	825	14	825	10	825	14	825
750	A_1	11	1125	11	1425	11	1125	11	1425
	A_2	12	975	13	975	12	1125	13	1125
	V	12	825	14	825	12	825	14	825
900	A_1	13	1125	13	1425	13	1125	13	1425
	A_2	14	975	15	975	14	1125	15	1125
	V	12	975	14	975	12	975	14	975
1050	A_1	13	1125	13	1425	13	1125	13	1425
	A_2	14	975	15	975	14	1125	15	1125
	V	12	1125	14	1125	12	1125	14	1125
1200	A_1	15	1125	15	1425	15	1125	15	1425
	A_2	16	975	17	975	16	1125	17	1125
	V	12	1275	14	1275	12	1275	14	1275
1350	A_1	15	1125	15	1425	15	1125	15	1425
	A_2	16	975	17	975	16	1125	17	1125
	V	12	1425	14	1425	12	1425	14	1425
	S	3	825	3	825	3	825	3	825
1500	A_1	17	1125	17	1425	17	1125	17	1425
	A_2	18	975	19	975	18	1125	19	1125
	V	12	1575	14	1575	12	1575	14	1575
	S	4	825	4	825	4	825	4	825
1650	A_1	17	1125	17	1425	17	1125	17	1425
	A_2	18	975	19	975	18	1125	19	1125
	V	12	1725	14	1725	12	1725	14	1725
	S	5	825	5	825	5	825	5	825
1800	A_1	19	1125	19	1425	19	1125	19	1425
	A_2	20	975	21	975	20	1125	21	1125
	V	12	1875	14	1875	12	1875	14	1875
	S	5	825	5	825	5	825	5	825
1950	A_1	19	1125	19	1425	19	1125	19	1425
	A_2	20	975	21	975	20	1125	21	1125
	V	12	2025	14	2025	12	2025	14	2025
	S	6	825	6	825	6	825	6	825
2100	A_1	21	1125	21	1425	21	1125	21	1425
	A_2	22	975	23	975	22	1125	23	1125
	V	12	2175	14	2175	12	2175	14	2175
	S	6	825	6	825	6	825	6	825

A_1, A_2, F, & V-BARS.....#13
E AND U-BARS.....#16
B AND S-BARS.....#19

FOR PIPE OPENING THROUGH WALLS					
WITH INSIDE LENGTH OF	600	750	900	1050	1200
ADD (kg OF STEEL FOR B-BAR)	2	2	3	3	3

DIMENSIONS				
SIZE	600 X 900	600 X 1200	900 X 900	900 X 1200
GRATE OPENING	600 X 900	600 X 1200	600 X 900	600 X 1200
INSIDE BOX	750 X 900	750 X 1200	900 X 900	900 X 1200
L	600	600	600	600
W	900	1200	900	1200
M	75	75	150	150
N	1050	1050	1200	1200

QUANTITIES					
D (mm)		600 X 900	600 X 1200	900 X 900	900 X 1200
750	C	0.80	0.93	0.86	1.01
	S	73	86	75	88
900	C	0.89	1.03	0.96	1.11
	S	79	93	81	95
1050	C	0.98	1.13	1.05	1.22
	S	81	95	83	97
1200	C	1.06	1.24	1.15	1.33
	S	87	102	89	104
1350	C	1.15	1.34	1.24	1.44
	S	94	109	97	112
1500	C	1.24	1.44	1.34	1.55
	S	102	118	105	121
1650	C	1.33	1.54	1.43	1.65
	S	106	122	108	125
1800	C	1.41	1.64	1.53	1.76
	S	112	129	115	132
1950	C	1.50	1.74	1.62	1.87
	S	115	133	118	136
2100	C	1.59	1.84	1.72	1.98
	S	121	140	124	143

QUANTITIES INCLUDE 0.11 m^3 CONCRETE FOR INVERT

CONC. DEDUCTION FOR PIPE OPENING m^3					
300	375	450	600	750	900
0.02	0.03	0.04	0.07	0.10	0.14

GENERAL NOTES:

ALL DIMENSIONS SHOWN ARE IN mm UNLESS OTHERWISE NOTED.

TOP OF DROP INLET WALLS SHALL BE LEVEL AND TO THE ELEVATION OF BOTTOM OF SLAB AT EDGE OF PAVEMENT, AT DROP INLET.

ALL CONCRETE ABOVE THE TAR-PAPER SEPARATION JOINT IS TO BE CONSTRUCTED DURING PAVING OPERATIONS AND WILL BE PAID FOR AS SQUARE METERS OF CONCRETE PAVEMENT.

ALL CONCRETE BELOW THE TAR-PAPER SEPARATION JOINT SHALL BE CLASS "B" CONCRETE. CONCRETE IN INVERTS SHALL BE PLACED AFTER DROP INLET HAS BEEN CONSTRUCTED.

REINFORCING BARS SHALL BE CUT AND/OR BENT AT PIPE OPENINGS. ALL U AND F-BARS SHALL BE SECURELY TIED TOGETHER AND FASTENED TO SECURE AGAINST ANY POSSIBLE DISPLACEMENT DURING THE PLACING OF CONCRETE. THE REINFORCING STEEL SHOWN ON THIS DRAWING IS IN ADDITION TO ANY REINFORCING SHOWN ON DRAWINGS FOR CONCRETE PAVEMENT.

NO DIRECT PAYMENT WILL BE MADE FOR CUTTING PIPE.

MISSOURI HIGHWAY AND TRANSPORTATION COMMISSION

DROP INLET

TYPE C

DATE: _____ EFFECTIVE: 05-01-1997 M604.21B 1/1