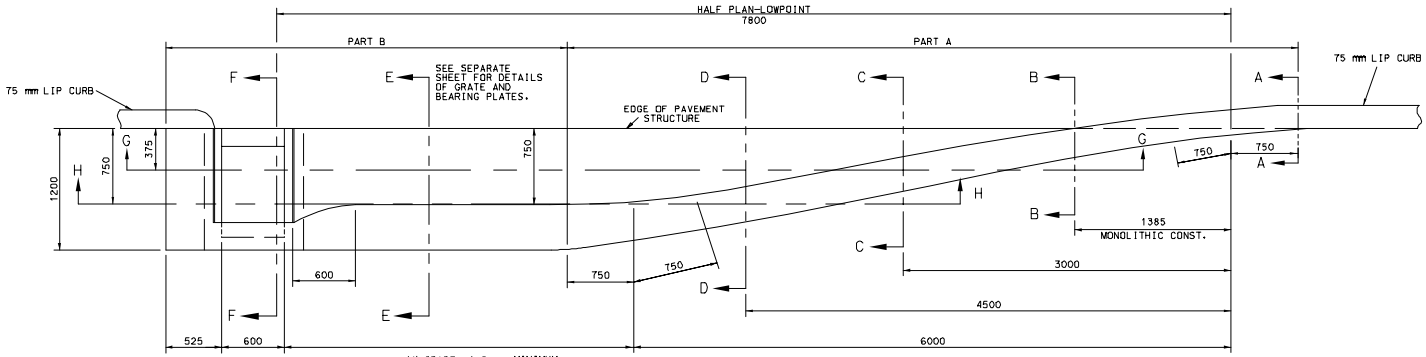


1% GRADE 1.5 m MINIMUM
2% GRADE 3.0 m MINIMUM
3% GRADE 4.5 m MINIMUM
4% GRADE 6.0 m MINIMUM
5% GRADE 7.5 m MINIMUM
6% GRADE 9.0 m MINIMUM

PLAN

| QUANTITIES & BAR BILL | | | | | | | | | | | | | | |
|---|---|---|---|---|---|---|---|---|---|---|---|---|---|---|
| DEPTH "D" | CONC. $m^3$ | STEEL kg | A1-BARS FLOOR AND END WALLS | | A2-BARS END WALLS | | B-BARS SIDE WALLS | | V1-BARS SIDE WALLS | | V2-BARS SIDE WALLS | | V3-BARS END AND SIDE WALLS | |
| | | | NO. | LENGTH | NO. | LENGTH | NO. | LENGTH | NO. | LENGTH | NO. | LENGTH | NO. | LENGTH |
| 525 | 0.53 | 22 | 6 | 825 | 2 | 1050 | 9 | 1125 | 3 | 600 | 2 | 525 | 5 | 450 |
| 675 | 0.62 | 24 | 6 | 825 | 2 | 1050 | 9 | 1125 | 3 | 750 | 2 | 675 | 5 | 600 |
| 825 | 0.70 | 29 | 8 | 825 | 2 | 1050 | 11 | 1125 | 3 | 900 | 2 | 825 | 5 | 750 |
| 975 | 0.78 | 30 | 8 | 825 | 2 | 1050 | 11 | 1125 | 3 | 1050 | 2 | 975 | 5 | 900 |
| 1125 | 0.86 | 36 | 10 | 825 | 2 | 1050 | 13 | 1125 | 3 | 1200 | 2 | 1125 | 5 | 1050 |
| 1275 | 0.94 | 37 | 10 | 825 | 2 | 1050 | 13 | 1125 | 3 | 1350 | 2 | 1275 | 5 | 1200 |
| 1425 | 1.02 | 43 | 12 | 825 | 2 | 1050 | 15 | 1125 | 3 | 1500 | 2 | 1425 | 5 | 1350 |
| 1575 | 1.10 | 44 | 12 | 825 | 2 | 1050 | 15 | 1125 | 3 | 1650 | 2 | 1575 | 5 | 1500 |
| ALL BARS ARE #13 | | | CONCRETE QUANTITIES INCLUDE 0.11 $m^3$ FOR INVERT | | | | | | | | | | | |

| $m^3$ DEDUCTIONS TO BE MADE FOR PIPE OPENINGS | | | |
|---|---|---|---|
| 300 | 375 | 450 | 600 |
| 0.01 | 0.03 | 0.04 | 0.07 |

| ADDITIONAL PAVEMENT | | | |
|---|---|---|---|
| GRADE (%) | PART A $m^2$ | PART B $m^2$ | TOTAL $m^2$ |
| 1 | 4.50 | 1.71 | 6.21 |
| 2 | 4.50 | 3.51 | 8.01 |
| 3 | 4.50 | 5.31 | 9.81 |
| 4 | 4.50 | 7.11 | 11.61 |
| 5 | 4.50 | 8.91 | 13.41 |
| 6 | 4.50 | 10.71 | 15.21 |
| LOW POINT | | | 10.81 |

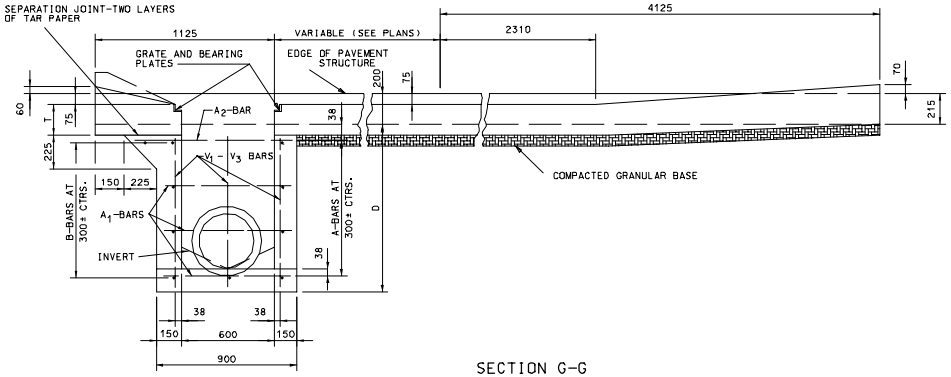


SECTION G-G

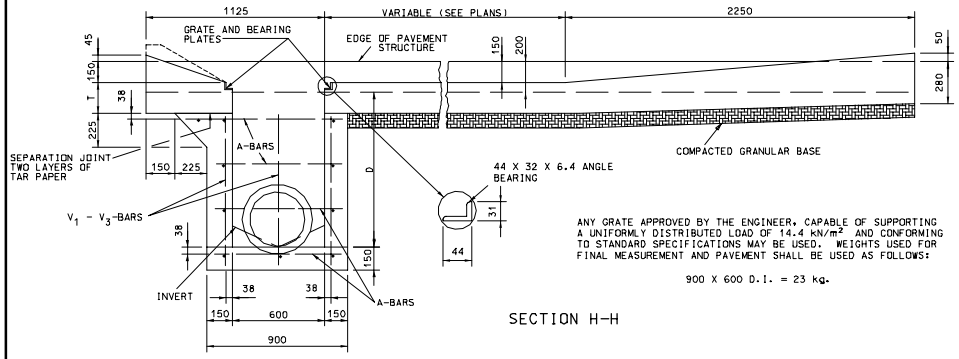


SECTION H-H

ANY GRATE APPROVED BY THE ENGINEER, CAPABLE OF SUPPORTING A UNIFORMLY DISTRIBUTED LOAD OF 14.4 kN/$m^2$ AND CONFORMING TO STANDARD SPECIFICATIONS MAY BE USED. WEIGHTS USED FOR FINAL MEASUREMENT AND PAVEMENT SHALL BE USED AS FOLLOWS:

900 X 600 D.I. = 23 kg.

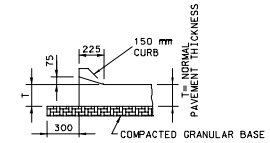


SECTION A-A

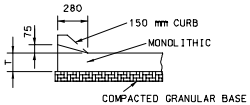


SECTION B-B

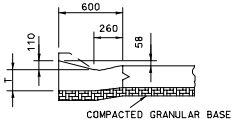


SECTION C-C

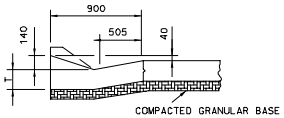


SECTION D-D

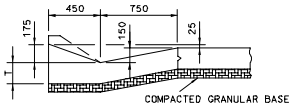


SECTION E-E

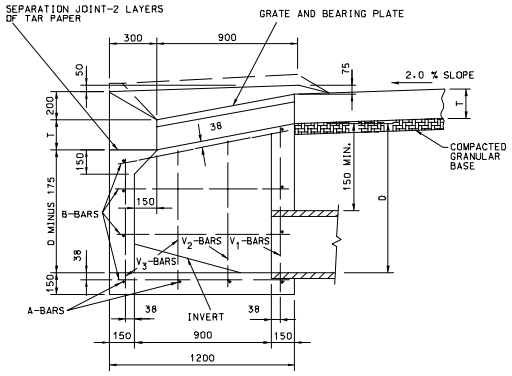


SECTION F-F

GENERAL NOTES:

ALL DIMENSIONS SHOWN ARE IN mm UNLESS OTHERWISE NOTED.

ALL CONCRETE ABOVE THE TAR PAPER JOINT AND CONCRETE IN THE GUTTER LEAD-OFF SHALL BE CONSTRUCTED OF PAVEMENT CONCRETE AND SHALL BE PAID FOR AS SQUARE METERS OF CONCRETE PAVEMENT.

ALL CONCRETE BELOW THE SEPARATION JOINT SHALL BE CLASS B CONCRETE. CONCRETE FOR INVERTS SHALL BE PLACED AFTER THE DROP INLET BOX HAS BEEN CONSTRUCTED.

NO DIRECT PAYMENT WILL BE MADE FOR CUTTING PIPE.

NO DIRECT PAYMENT WILL BE MADE FOR CUTTING OR BENDING REINFORCING BARS AT PIPE OPENINGS.

MISSOURI HIGHWAY AND TRANSPORTATION COMMISSION

# DROP INLET

## TYPE F

DATE: _____ EFFECTIVE: 05-01-1997 M604.25C 1/1