TABLE OF DIMENSIONS								
SIZE OF PIPE		DIMENSIONS		LENGTH OF BARS			QUANTITIES	
LARGE mm	SMALL mm	A & B mm	C mm	A(#16) 12 REQ'D mm	B(#19) 4 REQ'D mm	C(#13) 8 REQ'D mm	CONC. m^3	STEEL kg
300	300	800	300	725	1750	225	0.15	31
375	300 375	900	300	825	1950	225	0.20 0.19	35
450	300 375 450	975	300	900	2100	225	0.23 0.22 0.21	37
525	300 375 450	1050	300	975	2250	225	0.26 0.25 0.24	40
600	375 450 600	1150	300	1050	2450	225	0.30 0.29 0.26	43
750	450 600 750	1325	400	1250	2800	300	0.52 0.48 0.43	51
900	600 750 900	1500	400	1425	3150	300	0.62 0.58 0.52	57
1050	750 900 1050	1675	400	1600	3500	300	0.73 0.68 0.61	63
1200	900 1050 1200	1850	400	1800	3850	300	0.85 0.78 0.71	70
1350	1050 1200 1350	2125	500	2025	4400	450	1.42 1.33 1.22	81
1500	1200 1350 1500	2300	500	2225	4750	450	1.60 1.49 1.37	87
1650	1350 1500 1650	2475	600	2400	5100	525	2.13 1.99 1.84	94
1800	1500 1650 1800	2650	600	2575	5450	525	2.36 2.21 2.04	101

TABLE OF DIMENSIONS										
BOX SIZE mm	PIPE SIZE mm	DIMENSIONS			LENGTH OF BARS				QUANTITIES	
		A mm	B mm	C mm	A(#16) 6 REQ'D mm	B(#19) 4 REQ'D mm	C(#13) 8 REQ'D mm	D(#16) 6 REQ'D mm	CONC. m^3	STEEL kg
610 x 457	600	1515	1360	300	1440	3180	225	1285	0.45	56
610 x 610	750	1525	1525	400	1450	3350	325	1450	0.63	60
914 x 610	900	1820	1700	400	1745	3825	325	1625	0.82	68
914 x 914	1050	1940	1940	400	1810	4050	270	1810	0.94	72

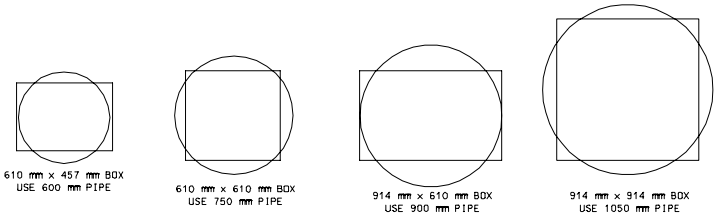

PIPE PLACEMENT

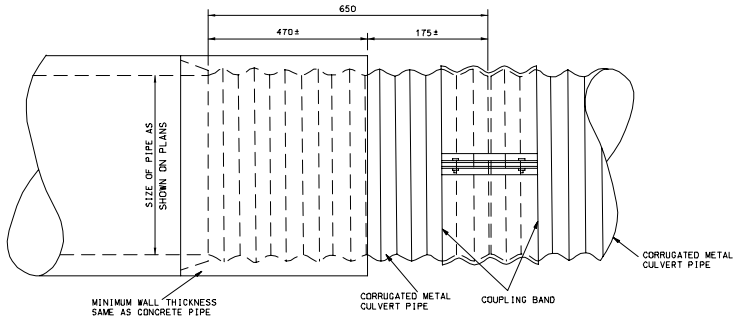

(FOR CONCRETE PIPE TO CORRUGATED METAL PIPE)
TYPE B COLLAR

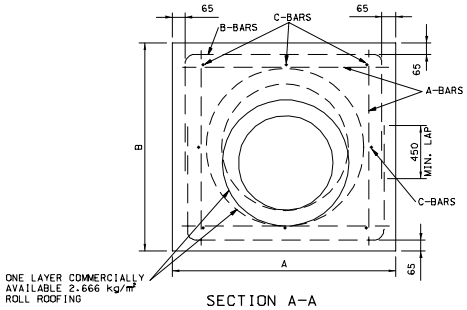

SECTION A-A

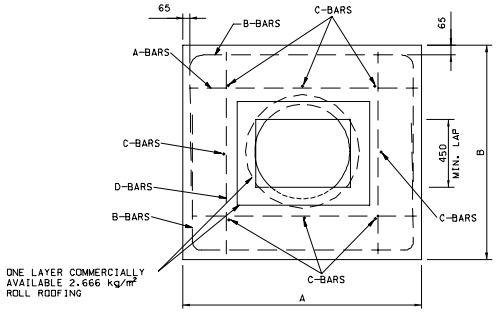

SECTION A-A

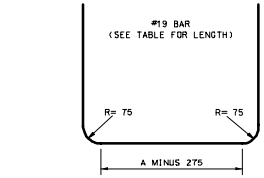

BENDING DIAGRAM FOR B-BARS

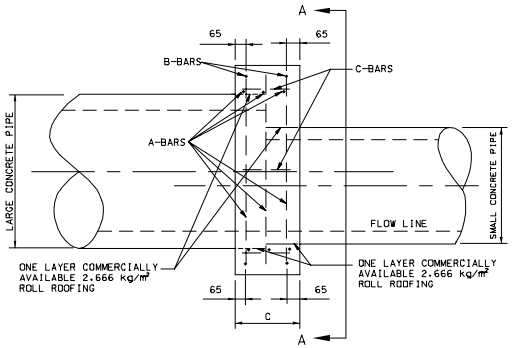

ELEVATION
(FOR CONCRETE PIPE TO CONCRETE PIPE)
TYPE A COLLAR

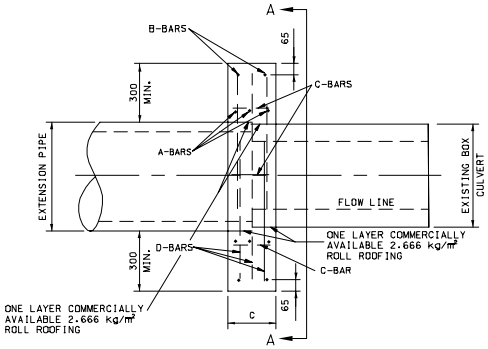

ELEVATION
(FOR BOX CULVERT TO PIPE)
TYPE C COLLAR

GENERAL NOTE:

ALL DIMENSIONS SHOWN ARE IN mm UNLESS OTHERWISE NOTED.

MISSOURI HIGHWAY AND TRANSPORTATION COMMISSION

PIPE COLLARS

DATE:_____ EFFECTIVE: 10-01-2000 M604.40F 1/1