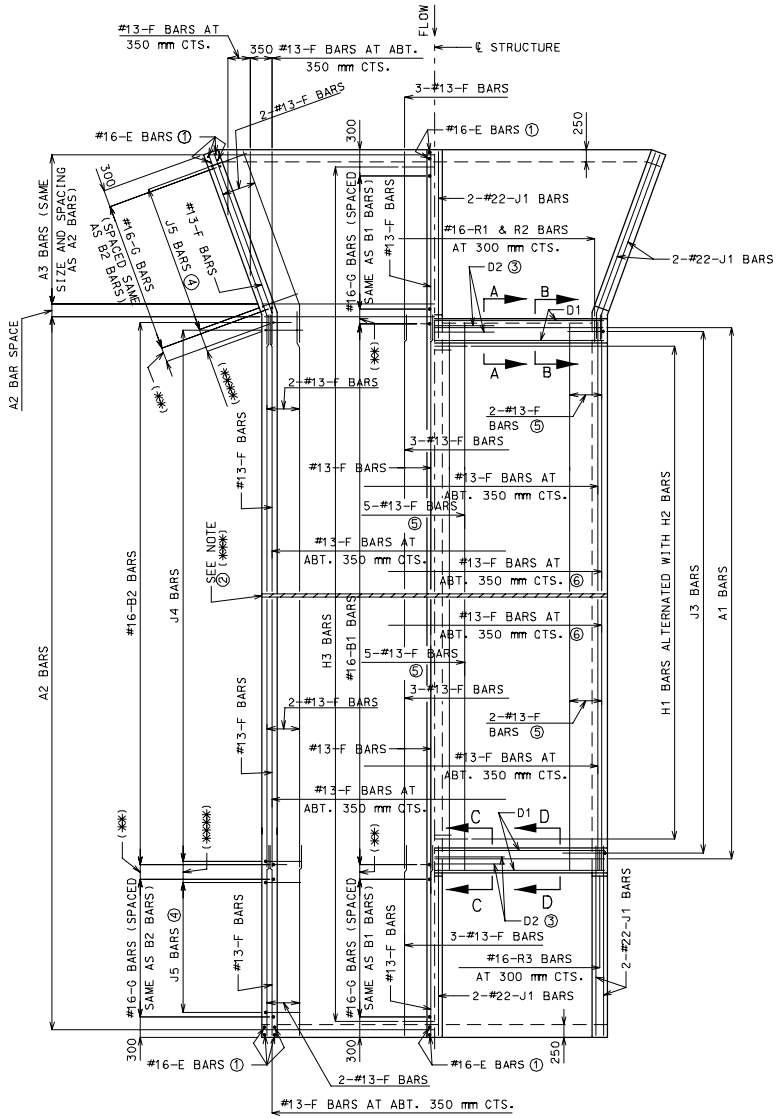

HALF HORIZONTAL SECTION HALF PLAN

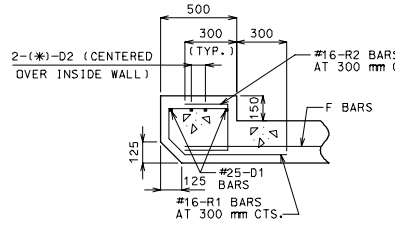

SECTION A-A

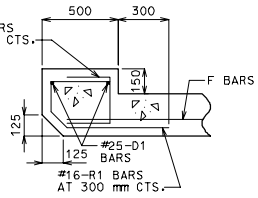

SECTION B-B

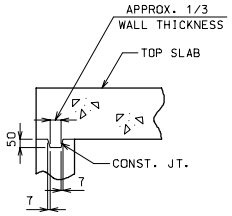

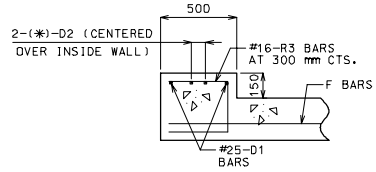

SECTION C-C

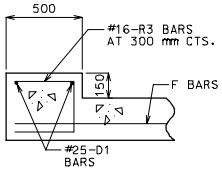

SECTION D-D

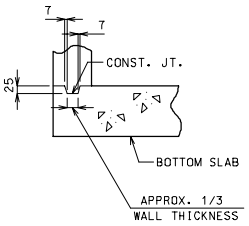

DETAIL OF KEYED CONST. JT.

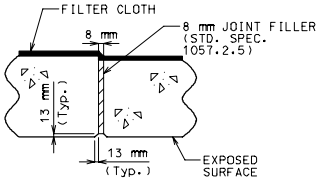

DETAIL OF TRANSVERSE JOINT THRU BARREL OF CULVERT

① UPSTREAM = 1050 mm
DOWNSTREAM = 1200 mm

② IF MORE THAN ONE TRANSVERSE JOINT IS REQUIRED, SEE STANDARD SHEET M703.42E FOR DETAILS.

③ D2 BAR LENGTH EACH SIDE OF ℄ WALLS = 48 BAR DIAMETERS OR ¼ (CLEAR SPAN) (USE GREATER).

④ FOR DETAILS AND REINFORCEMENT IN WINGS, SEE STANDARD SHEET M703.37B.

⑤ USE THESE BARS FOR DESIGN FILLS OF MORE THAN 610 mm.

⑥ USE THESE BARS FOR DESIGN FILLS OF 610 mm OR LESS.

(✱) #25 (3 m < CLEAR SPAN ≤ 4 m)
#29 (4 m < CLEAR SPAN)
OTHERWISE D2 BAR SHALL NOT BE USED.

(✱✱) VARIES - 300 mm MAXIMUM

(✱✱✱) USE TRANSVERSE JOINT WHEN BARREL IS OVER 25 METERS LONG BETWEEN HEADWALLS.

USE ADDITIONAL TRANSVERSE JOINTS TO PROVIDE 15 METERS MAXIMUM SPACING BETWEEN JOINTS.

DISTANCE BETWEEN INSIDE FACE OF HEADWALL AND TRANSVERSE JOINT SHALL NOT BE LESS THAN 1000 mm.

(✱✱✱✱) J4 BAR SPACING

GENERAL NOTES:

DESIGN UNIT STRESSES:
CLASS B-1 CONCRETE, f'c = 28 MPa
REINFORCING STEEL (GRADE 420), fy = 420 MPa

ALL DIMENSIONS SHOWN ARE IN mm UNLESS OTHERWISE NOTED.

FOR DIMENSIONS AND SIZE AND SPACING OF REINFORCING STEEL, SEE STANDARD SHEET M703.45B.

LAP ALL LONGITUDINAL BARS A MINIMUM OF 610 mm AT SPLICES.

MINIMUM CLEARANCE TO REINFORCING STEEL SHALL BE 40 mm UNLESS OTHERWISE SHOWN.

JOINT FILLER SHALL BE SECURELY STITCHED TO ONE FACE OF THE CONCRETE WITH 3.5 mm DIA. (10 GAGE) COPPER WIRE OR 2.8 mm DIA. (12 GAGE) SOFT DRAWN GALVANIZED STEEL WIRE.

BEVELED HEADWALL TO BE LOCATED AT UPSTREAM END.

A FILTER CLOTH 1 METER IN WIDTH AND DOUBLE THICKNESS SHALL BE APPLIED TO ALL TRANSVERSE JOINTS IN THE TOP SLAB AND SIDEWALLS. THE MATERIAL SHALL BE CENTERED ON THE JOINT AND THE EDGES SEALED WITH A MASTIC OR WITH TWO SIDED TAPE. THE FILTER CLOTH SHALL BE A GEOTEXTILE MEETING THE APPROVAL OF THE ENGINEER AND HAVING A GRAB TENSILE STRENGTH OF 800 N. (ASTM D-4632) AND AN APPARENT OPENING SIZE OF 300 TO 150 MICROMETERS (ASTM D-4751). NO DIRECT PAYMENT WILL BE MADE FOR FURNISHING AND INSTALLING FILTER CLOTH.

FOR MORE DETAILS AND SECTION THROUGH BOX, SEE M703.41E SHEET 2 OF 2.

MISSOURI HIGHWAY AND TRANSPORTATION COMMISSION

CONCRETE
DOUBLE BOX STRUCTURE
FLARED WINGS
(SQUARE)

DATE: _____ | EFFECTIVE: 01-01-2003 | M703.41E | 1/2

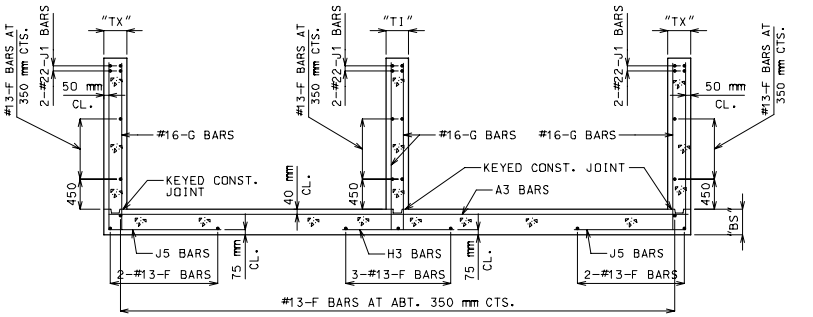

SECTION THRU WINGS (UPSTREAM SHOWN)

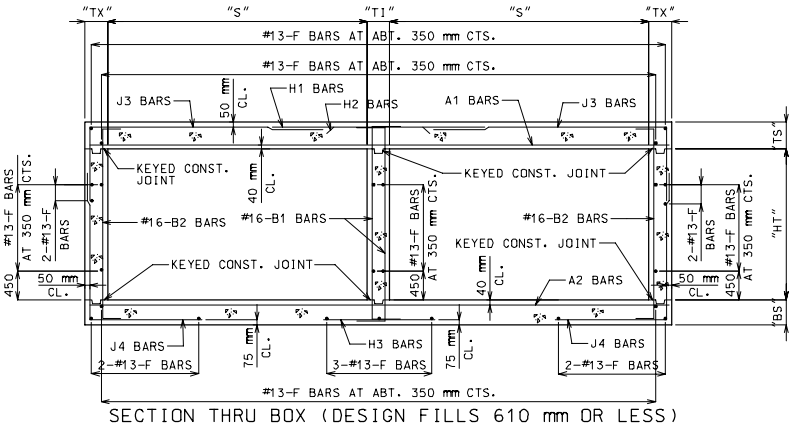

SECTION THRU BOX (DESIGN FILLS 610 mm OR LESS)

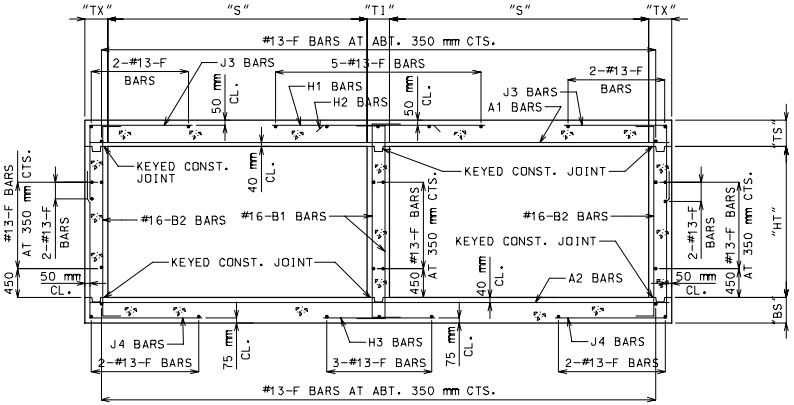

SECTION THRU BOX (DESIGN FILLS OVER 610 mm)

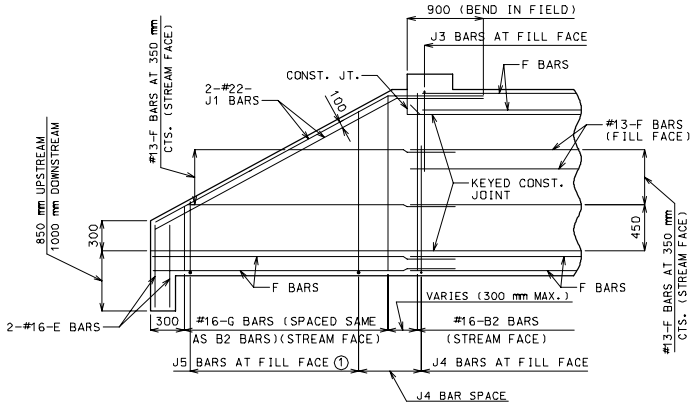

ELEVATION OF EXTERIOR WING
(UPSTREAM SHOWN)

NOTE: CONSTRUCTION JOINT KEY OMITTED FOR CLARITY.

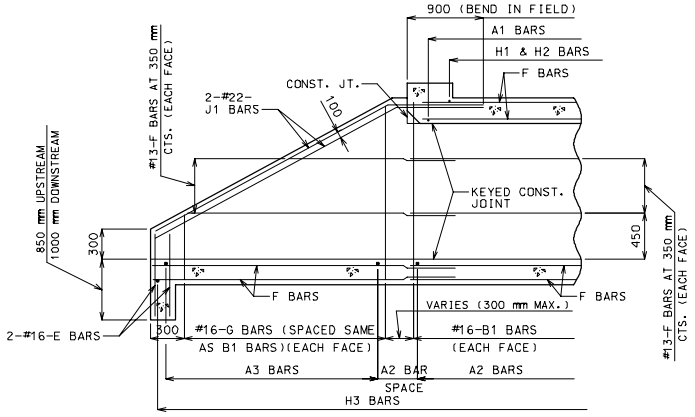

SECTION NEAR INTERIOR WING
(UPSTREAM SHOWN)

GENERAL NOTES:

ALL DIMENSIONS SHOWN ARE IN mm UNLESS OTHERWISE NOTED.

J1 BARS MAY BE BENT IN FIELD OR SHOP.

MINIMUM CLEARANCE TO REINFORCING STEEL SHALL BE 40 mm UNLESS OTHERWISE SHOWN.

FOR DIMENSIONS AND SIZE AND SPACING OF REINFORCING STEEL, SEE STANDARD SHEET M703.45B.

1 FOR DETAILS OF REINFORCEMENT IN WINGS, SEE STANDARD SHEET M703.37B.

MISSOURI HIGHWAY AND TRANSPORTATION COMMISSION

CONCRETE
DOUBLE BOX STRUCTURE
FLARED WINGS
(SQUARE)

DATE: _____ | EFFECTIVE: 01-01-2003 | M703.41E | 2/2