	DESIGN FILL	MEMBER THICKNESSES				Span (S) = 1.2 m; HT (m) = 1.2 or 1.5																																	
						TOP SLAB BARS								BOTTOM SLAB BARS						WALL BARS								COEFFICIENTS (see note)										"C" Multiplier	"K" Multiplier	
		TS	BS	TX	TI	A1	Bars	J3	Bars	H1	Bars	H2	Bars	A2	Bars	J4	Bars	H3	Bars	B1	Bars	B2	Bars		F	Bars	J4		H3		J3		H1		H2			S = 1.2 m	HT = 1.2 m	HT = 1.5 m
	(mm)	Thick	Thick.	Thick	Thick.	Size	c to c	Size	c to c	Size	c to c	Size	c to c	Size	c to c	Size	c to c	Size	c to c	Size	c to c	G1	Size	c to c	Size	c to c	C4	K3	C7		C1	K2	C5		C6			mm	mm	mm
MS18	250	250	200	200	200	13	220	13	300	13	580	13	580	13	300	13	300	13	240	16	300	300	16	300	13	350	0.55	0.88	0.58		0.56	0.45	0.92		0.45			1400	1525	1825
MS18	800	200	200	200	200	13	300	13	300	13	600	13	600	13	300	13	300	13	280	16	300	300	16	300	13	350	0.52	0.91	0.53		0.57	0.44	0.92		0.36			1400	1475	1775
MS18	1300	200	200	200	200	13	300	13	300	13	600	13	600	13	300	13	300	13	300	16	300	300	16	300	13	350	0.50	0.91	0.48		0.51	0.44	0.49		0.33			1400	1475	1775
MS18	1800	200	200	200	200	13	300	13	300	13	600	13	600	13	300	13	300	13	300	16	300	300	16	300	13	350	0.48	0.91	0.47		0.49	0.44	0.51		0.34			1400	1475	1775
MS18	2300	200	200	200	200	13	300	13	300	13	600	13	600	13	300	13	300	13	300	16	300	0	16	300	13	350	0.48	0.91	0.47		0.48	0.44	0.49		0.35			1400	1475	1775
MS18 MOD	200	300	200	200	200	13	190	13	250	13	480	13	480	13	300	13	300	13	200	16	300	300	16	300	13	350	0.55	0.87	0.58		0.56	0.47	0.92		0.47			1400	1575	1850
MS18 MOD	800	200	200	200	200	13	300	13	300	13	600	13	600	13	300	13	300	13	230	16	300	300	16	300	13	350	0.52	0.91	0.55		0.62	0.44	0.92		0.40			1400	1475	1775
MS18 MOD	1300	200	200	200	200	13	300	13	300	13	600	13	600	13	300	13	300	13	300	16	300	300	16	300	13	350	0.50	0.91	0.48		0.51	0.44	0.50		0.35			1400	1475	1775
MS18 MOD	1800	200	200	200	200	13	300	13	300	13	600	13	600	13	300	13	300	13	300	16	300	300	16	300	13	350	0.48	0.91	0.47		0.49	0.44	0.52		0.36			1400	1475	1775
MS18 MOD	2300	200	200	200	200	13	300	13	300	13	600	13	600	13	300	13	300	13	300	16	300	0	16	300	13	350	0.48	0.91	0.47		0.48	0.44	0.50		0.35			1400	1475	1775
MS18 or MS18 MOD	2800	200	200	200	200	13	300	13	300	13	600	13	600	13	300	13	300	13	300	16	300	0	16	300	13	350	0.47	0.91	0.45		0.47	0.44	0.46		0.33			1400	1475	1775
MS18 or MS18 MOD	3300	200	200	200	200	13	300	13	300	13	600	13	600	13	300	13	300	13	300	16	300	0	16	300	13	350	0.47	0.91	0.45		0.47	0.44	0.46		0.34			1400	1475	1775
MS18 or MS18 MOD	3800	200	200	200	200	13	300	13	300	13	600	13	600	13	300	13	300	13	300	16	300	0	16	300	13	350	0.46	0.91	0.45		0.46	0.44	0.46		0.34			1400	1475	1775
MS18 or MS18 MOD	4300	200	200	200	200	13	300	13	300	13	600	13	600	13	300	13	300	13	300	16	300	0	16	300	13	350	0.46	0.91	0.45		0.46	0.44	0.46		0.34			1400	1475	1775
MS18 or MS18 MOD	4800	200	200	200	200	13	300	13	300	13	600	13	600	13	300	13	300	13	290	16	300	0	16	300	13	350	0.46	0.91	0.45		0.46	0.44	0.46		0.37			1400	1475	1775
MS18 or MS18 MOD	5300	200	200	200	200	13	300	13	300	13	600	13	600	13	300	13	300	13	270	16	300	0	16	300	13	350	0.45	0.91	0.45		0.45	0.44	0.46		0.37			1400	1475	1775
MS18 or MS18 MOD	5800	200	225	200	200	13	300	13	300	13	600	13	600	13	330	13	300	13	310	16	300	0	16	300	13	350	0.45	0.91	0.45		0.45	0.43	0.46		0.37			1400	1500	1800
MS18 or MS18 MOD	6300	200	225	200	200	13	300	13	300	13	600	13	600	13	330	13	300	13	290	16	300	0	16	300	13	350	0.45	0.91	0.45		0.45	0.43	0.46		0.37			1400	1500	1800
MS18 or MS18 MOD	6800	200	225	200	200	13	300	13	300	13	580	13	580	13	330	13	300	13	270	16	300	0	16	300	13	350	0.45	0.91	0.45		0.45	0.43	0.46		0.37			1400	1500	1800
MS18 or MS18 MOD	7300	200	250	200	200	13	300	13	300	13	540	13	540	13	310	13	300	13	260	16	300	0	16	300	13	350	0.45	0.91	0.45		0.45	0.42	0.47		0.37			1400	1525	1800
MS18 or MS18 MOD	7800	200	250	200	200	13	300	13	280	13	500	13	500	13	330	13	300	13	300	16	300	0	16	300	13	350	0.45	0.91	0.44		0.45	0.42	0.47		0.37			1400	1525	1825
MS18 or MS18 MOD	8300	200	250	200	200	13	300	13	270	13	480	13	480	13	310	13	300	13	280	16	300	0	16	300	13	350	0.45	0.91	0.44		0.45	0.42	0.47		0.37			1400	1525	1825
MS18 or MS18 MOD	8775	225	250	200	200	13	330	13	270	13	530	13	530	13	300	13	280	13	250	16	300	0	16	300	13	350	0.45	0.90	0.45		0.45	0.43	0.46		0.37			1400	1550	1850
MS18 or MS18 MOD	9275	225	275	200	200	13	310	13	250	13	500	13	500	13	290	13	270	13	250	16	300	0	16	300	13	350	0.45	0.90	0.44		0.45	0.42	0.47		0.37			1400	1575	1850
MS18 or MS18 MOD	9775	225	275	200	200	13	300	13	240	13	470	13	470	13	300	13	270	13	280	16	300	0	16	300	13	350	0.45	0.90	0.44		0.45	0.42	0.47		0.37			1400	1575	1875

	DESIGN FILL	MEMBER THICKNESSES				SPAN (S) = 1.2 m; HT (m) = 1.8 or 2.1																																	
						TOP SLAB BARS								BOTTOM SLAB BARS						WALL BARS								COEFFICIENTS (see note)										"C" Multiplier	"K" Multiplier	
		TS	BS	TX	TI	A1	Bars	J3	Bars	H1	Bars	H2	Bars	A2	Bars	J4	Bars	H3	Bars	B1	Bars	B2	Bars		F	Bars	J4		H3		J3		H1		H2			S = 1.2 m	HT = 1.8 m	HT = 2.1 m
	(mm)	Thick	Thick.	Thick	Thick.	Size	c to c	Size	c to c	Size	c to c	Size	c to c	Size	c to c	Size	c to c	Size	c to c	Size	c to c	G1	Size	c to c	Size	c to c	C4	K3	C7		C1	K2	C5		C6			mm	mm	mm
MS18	250	250	200	200	200	13	210	13	300	13	540	13	540	13	300	13	280	13	230	16	300	300	16	300	13	350	0.68	0.91	0.58		0.56	0.33	0.92		0.46			1400	2125	2425
MS18	800	200	200	200	200	13	300	13	300	13	600	13	600	13	300	13	300	13	270	16	300	300	16	300	13	350	0.65	0.93	0.53		0.56	0.31	0.92		0.36			1400	2075	2375
MS18	1300	200	200	200	200	13	300	13	300	13	600	13	600	13	300	13	300	13	300	16	300	300	16	300	13	350	0.63	0.93	0.48		0.59	0.31	0.92		0.34			1400	2075	2375
MS18	1800	200	200	200	200	13	300	13	300	13	600	13	600	13	300	13	300	13	300	16	300	300	16	300	13	350	0.61	0.93	0.47		0.64	0.31	0.51		0.35			1400	2075	2375
MS18	2300	200	200	200	200	13	300	13	300	13	600	13	600	13	300	13	300	13	300	16	300	0	16	300	13	350	0.60	0.93	0.46		0.62	0.31	0.49		0.35			1400	2075	2375
MS18 MOD	225	275	200	200	200	13	180	13	280	13	450	13	450	13	300	13	270	13	200	16	300	300	16	300	13	350	0.68	0.90	0.58		0.56	0.34	0.92		0.48			1400	2150	2450
MS18 MOD	800	200	200	200	200	13	300	13	300	13	600	13	600	13	300	13	300	13	230	16	300	300	16	300	13	350	0.65	0.93	0.55		0.56	0.31	0.92		0.42			1400	2075	2375
MS18 MOD	1300	200	200	200	200	13	300	13	300	13	600	13	600	13	300	13	300	13	300	16	300	300	16	300	13	350	0.63	0.93	0.48		0.59	0.31	0.92		0.34			1400	2075	2375
MS18 MOD	1800	200	200	200	200	13	300	13	300	13	600	13	600	13	300	13	300	13	300	16	300	300	16	300	13	350	0.61	0.93	0.47		0.64	0.31	0.52		0.35			1400	2075	2375
MS18 MOD	2300	200	200	200	200	13	300	13	300	13	600	13	600	13	300	13	300	13	300	16	300	0	16	300	13	350	0.60	0.93	0.46		0.62	0.31	0.50		0.35			1400	2075	2375
MS18 or MS18 MOD	2800	200	200	200	200	13	300	13	300	13	600	13	600	13	300	13	280	13	300	16	300	0	16	300	13	350	0.59	0.93	0.45		0.61	0.31	0.46		0.32			1400	2075	2375
MS18 or MS18 MOD	3300	200	200	200	200	13	300	13	300	13	600	13	600	13	300	13	250	13	300	16	300	0	16	300	13	350	0.58	0.93	0.45		0.60	0.31	0.46		0.34			1400	2075	2375
MS18 or MS18 MOD	3800	200	200	200	200	13	300	13	300	13	600	13	600	13	300	13	230	13	300	16	300	0	16	300	13	350	0.57	0.93	0.45		0.59	0.31	0.46		0.34			1400	2075	2375
MS18 or MS18 MOD	4300	200	200	200	200	13	300	13	280	13	600	13	600	13	300	13	210	13	300	16	300	0	16	300	13	350	0.57	0.93	0.45		0.58	0.31	0.45		0.34			1400	2075	2375
MS18 or MS18 MOD	4800	200	200	200	200	13	300	13	250	13	600	13	600	13	300	13	190	13	300	16	300	0	16	300	13	350	0.56	0.93	0.45		0.58	0.31	0.45		0.37			1400	2075	2375
MS18 or MS18 MOD	5300	200	225	200	200	13	300	13	230	13	600	13	600	13	300	13	220	13	280	16	300	0	16	300	13	350	0.57	0.93	0.45		0.57	0.31	0.45		0.37			1400	2075	2400
MS18 or MS18 MOD	5800	200	225	200	200	13	300	13	210	13	600	13	600	13	330	13	210	13	330	16	300	0	16	300	13	350	0.57	0.93	0.44		0.57	0.31	0.46		0.37			1400	2100	2400
MS18 or MS18 MOD	6300	200	225	200	200	13	300	13	190	13	600	13	600	13	330	13	190	13	310	16	300	0	16	300	13	350	0.57	0.93	0.44		0.56	0.31	0.46		0.37			1400	2100	2400
MS18 or MS18 MOD	6800	200	225	200	200	13	300	13	190	13	600	13	600	13	330	13	180	13	290	16	300	0	16	300	13	350	0.56	0.93	0.44		0.56	0.31	0.46		0.37			1400	2100	2400
MS18 or MS18 MOD	7300	200	250	225	200	13	300	13	210	13	580	13	580	13	320	13	210	13	340	16	300	0	16	300	13	350	0.57	0.93	0.44		0.56	0.31	0.45		0.37			1413	2100	2425
MS18 or MS18 MOD	7800	200	250	225	200	13	300	13	200	13	550	13	550	13	340	13	200	13	320	16	300	0	16	300	13	350	0.56	0.93	0.43		0.56	0.30	0.46		0.37			1413	2125	2425
MS18 or MS18 MOD	8300	200	250	225	200	13	300	13	190	13	520	13	520	13	330	13	190	13	300	16	300	0	16	300	13	350	0.56	0.93	0.43		0.55	0.30	0.46		0.37			1413	2125	2425
MS18 or MS18 MOD	8800	200	250	225	200	13	300	13	180	13	480	13	480	13	310	13	180	13	280	16	300	0	16	300	13	350	0.56	0.93	0.44		0.55	0.30	0.46		0.37			1413	2125	2425
MS18 or MS18 MOD	9275	225	250	250	200	13	330	13	200	13	550	13	550	13	290	13	190	13	250	16	300	0	16	300	13	350	0.56	0.92	0.44		0.56	0.31	0.45		0.36			1425	2150	2450
MS18 or MS18 MOD	9775	225	275	250	200	13	320	13	190	13	520	13	520	13	310	13	190	13	290	16	300	0	16	300	13	350	0.57	0.92	0.43		0.56	0.31	0.45		0.36			1425	2175	2475

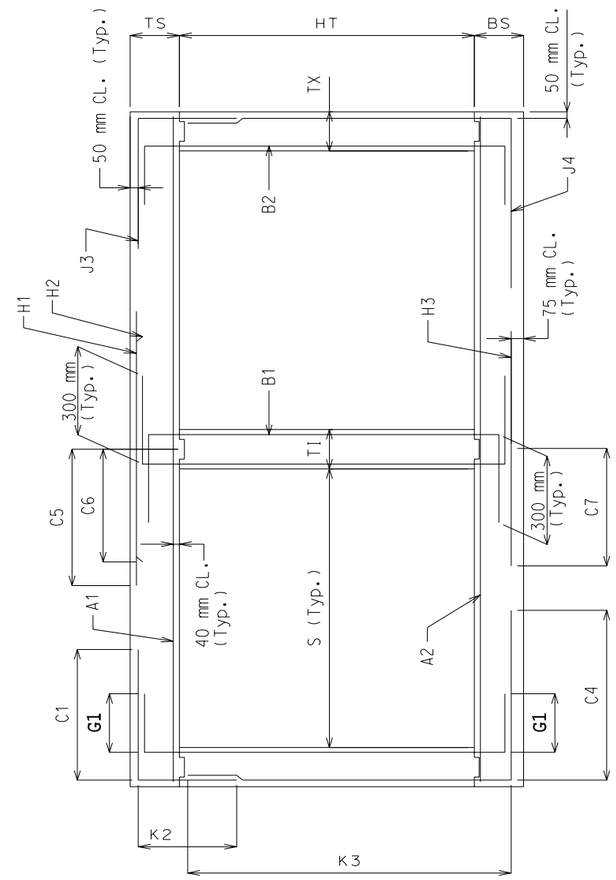

SECTION THRU BOX

NOTE: IF DESIGN FILL FALLS BETWEEN TABULATED FILLS, USE THE ADJACENT TABULATED FILL WHICH YIELDS THE GREATER MEMBER THICKNESS. IF THE MEMBER THICKNESSES ARE EQUAL, USE THE ADJACENT TABULATED FILL WHICH YIELDS THE GREATER AREA OF REINFORCEMENT.

SPECIAL DESIGNS ARE REQUIRED WHEN THE DESIGN FILL IS OUTSIDE THE RANGE OF TABULATED FILLS.

ALL DIMENSIONS ARE IN mm UNLESS OTHERWISE SPECIFIED.

COEFFICIENTS: DIMENSIONS MARKED WITH C# OR K# ARE THE PRODUCT OF THE COEFFICIENT AND ITS ASSOCIATED MULTIPLIER.

DESIGN FILL HEIGHT GIVEN IN THE TABLES IS THE HEIGHT FROM THE TOP OF THE EARTH FILL OR ROADWAY TO THE TOP OF THE TOP SLAB.

ALL CULVERTS MEET STRENGTH REQUIREMENTS FOR MILITARY 106 kN TANDEM AXLE LOADING.

MISSOURI HIGHWAY AND TRANSPORTATION COMMISSION

CONCRETE DOUBLE BOX CULVERT

MEMBER SIZES AND REINFORCEMENT

(MS18 & MS18 MOD LOADING)

DATE:	EFFECTIVE: 04-01-2002	M703.45B	1/13

Span (S) = 1.5 m
HT (m) = 1.2 or 1.5 or 1.8

Loading	DESIGN FILL (mm)	TS Thick	BS Thick.	TX Thick	TI Thick.	TOP SLAB BARS A1 Size	A1 Bars c to c	J3 Size	J3 Bars c to c	H1 Size	H1 Bars c to c	H2 Size	H2 Bars c to c	BOTTOM SLAB BARS A2 Size	A2 Bars c to c	J4 Size	J4 Bars c to c	H3 Size	H3 Bars c to c	WALL BARS B1 Size	B1 Bars c to c	B2 Bars G1	B2 Bars Size	B2 Bars c to c	F Size	F Bars c to c	COEFFICIENTS (see note) J4 C4	J4 K3	H3 C7	J3 C1	J3 K2	H1 C5	H2 C6	"C" Multiplier S = 1.5 m (mm)	"K" Multiplier HT = 1.2 m (mm)	HT = 1.5 m (mm)	HT = 1.8 m (mm)
MS18	250	250	200	200	200	13	180	13	300	13	600	13	600	13	300	13	250	13	160	16	300	300	16	300	13	350	0.51	0.90	0.53	0.51	0.45	0.88	0.47	1700	1525	1825	2125
MS18	800	200	200	200	200	13	290	13	300	13	600	13	600	13	300	13	300	13	180	16	300	300	16	300	13	350	0.47	0.92	0.50	0.55	0.44	0.88	0.37	1700	1475	1775	2075
MS18	1300	200	200	200	200	13	300	13	300	13	600	13	600	13	300	13	300	13	250	16	300	300	16	300	13	350	0.45	0.92	0.45	0.47	0.44	0.48	0.34	1700	1475	1775	2075
MS18	1800	200	200	200	200	13	300	13	300	13	600	13	600	13	300	13	300	13	260	16	300	300	16	300	13	350	0.44	0.92	0.43	0.44	0.44	0.47	0.34	1700	1475	1775	2075
MS18	2300	200	200	200	200	13	300	13	300	13	600	13	600	13	300	13	300	13	250	16	300	0	16	300	13	350	0.43	0.92	0.43	0.43	0.44	0.45	0.33	1700	1475	1775	2075
MS18 MOD	225	275	225	200	200	13	160	13	280	13	540	13	540	13	330	13	250	13	160	16	300	300	16	300	13	350	0.51	0.89	0.55	0.51	0.46	0.88	0.50	1700	1575	1875	2175
MS18 MOD	800	200	225	200	200	13	240	13	300	13	530	13	530	13	330	13	300	13	180	16	300	300	16	300	13	350	0.48	0.92	0.53	0.61	0.43	0.88	0.37	1700	1500	1800	2100
MS18 MOD	1300	200	200	200	200	13	300	13	300	13	600	13	600	13	300	13	300	13	220	16	300	300	16	300	13	350	0.45	0.92	0.46	0.48	0.44	0.49	0.34	1700	1475	1775	2075
MS18 MOD	1800	200	200	200	200	13	300	13	300	13	600	13	600	13	300	13	300	13	240	16	300	300	16	300	13	350	0.44	0.92	0.44	0.44	0.44	0.48	0.34	1700	1475	1775	2075
MS18 MOD	2300	200	200	200	200	13	300	13	300	13	600	13	600	13	300	13	300	13	230	16	300	0	16	300	13	350	0.43	0.92	0.43	0.43	0.44	0.46	0.34	1700	1475	1775	2075
MS18 or MS18 MOD	2800	200	200	200	200	13	300	13	300	13	600	13	600	13	300	13	300	13	220	16	300	0	16	300	13	350	0.42	0.92	0.43	0.42	0.44	0.43	0.33	1700	1475	1775	2075
MS18 or MS18 MOD	3300	200	200	200	200	13	300	13	300	13	590	13	590	13	300	13	300	13	200	16	300	0	16	300	13	350	0.41	0.92	0.43	0.42	0.44	0.43	0.33	1700	1475	1775	2075
MS18 or MS18 MOD	3800	200	200	200	200	13	300	13	300	13	600	13	600	13	300	13	300	13	210	16	300	0	16	300	13	350	0.41	0.92	0.42	0.41	0.44	0.42	0.32	1700	1475	1775	2075
MS18 or MS18 MOD	4300	200	225	200	200	13	300	13	300	13	540	13	540	13	300	13	300	13	250	16	300	0	16	300	13	350	0.41	0.92	0.41	0.41	0.43	0.43	0.33	1700	1500	1800	2100
MS18 or MS18 MOD	4800	200	225	200	200	13	300	13	300	13	490	13	490	13	300	13	280	13	220	16	300	0	16	300	13	350	0.41	0.92	0.41	0.41	0.43	0.43	0.33	1700	1500	1800	2100
MS18 or MS18 MOD	5300	200	225	200	200	13	300	13	270	13	440	13	440	13	280	13	270	13	200	16	300	0	16	300	13	350	0.40	0.92	0.41	0.41	0.43	0.43	0.33	1700	1500	1800	2100
MS18 or MS18 MOD	5800	200	250	200	200	13	290	13	240	13	400	13	400	13	290	13	250	13	230	16	300	0	16	300	13	350	0.40	0.92	0.40	0.41	0.42	0.43	0.33	1700	1525	1825	2125
MS18 or MS18 MOD	6300	200	250	200	200	13	260	13	230	13	370	13	370	13	260	13	240	13	220	16	300	0	16	300	13	350	0.40	0.92	0.40	0.40	0.42	0.43	0.33	1700	1525	1825	2125
MS18 or MS18 MOD	6775	225	275	200	200	13	280	13	220	13	400	13	400	13	260	13	230	13	190	16	300	0	16	300	13	350	0.40	0.91	0.41	0.40	0.42	0.43	0.33	1700	1575	1875	2150
MS18 or MS18 MOD	7275	225	275	200	200	13	260	13	210	13	370	13	370	13	260	13	220	13	210	16	300	0	16	300	13	350	0.40	0.91	0.41	0.40	0.42	0.43	0.33	1700	1575	1875	2175
MS18 or MS18 MOD	7750	250	275	200	200	13	250	13	190	13	350	13	350	13	240	13	210	13	190	16	300	0	16	300	13	350	0.40	0.91	0.41	0.40	0.43	0.43	0.33	1700	1600	1875	2175
MS18 or MS18 MOD	8250	250	300	200	200	13	260	13	190	13	370	13	370	13	240	13	190	13	190	16	300	0	16	300	13	350	0.40	0.90	0.41	0.40	0.43	0.43	0.33	1700	1625	1925	2200
MS18 or MS18 MOD	8750	250	300	225	200	13	240	13	210	13	350	13	350	13	240	13	230	13	200	16	300	0	16	300	13	350	0.40	0.90	0.41	0.41	0.43	0.43	0.33	1713	1625	1925	2225
MS18 or MS18 MOD	9225	275	300	225	200	13	240	13	200	13	340	13	340	13	230	13	220	13	180	16	300	0	16	300	13	350	0.40	0.90	0.41	0.41	0.44	0.43	0.33	1713	1650	1925	2225
MS18 or MS18 MOD	9725	275	325	225	200	13	240	13	200	13	360	13	360	13	220	13	200	13	180	16	300	0	16	300	13	350	0.40	0.89	0.41	0.41	0.43	0.43	0.33	1713	1675	1950	2250

SPAN (S) = 1.5 m
HT (m) = 2.1 or 2.4

Loading	DESIGN FILL (mm)	TS Thick	BS Thick.	TX Thick	TI Thick.	TOP SLAB BARS A1 Size	A1 Bars c to c	J3 Size	J3 Bars c to c	H1 Size	H1 Bars c to c	H2 Size	H2 Bars c to c	BOTTOM SLAB BARS A2 Size	A2 Bars c to c	J4 Size	J4 Bars c to c	H3 Size	H3 Bars c to c	WALL BARS B1 Size	B1 Bars c to c	B2 Bars G1	B2 Bars Size	B2 Bars c to c	F Size	F Bars c to c	COEFFICIENTS (see note) J4 C4	J4 K3	H3 C7	J3 C1	J3 K2	H1 C5	H2 C6	"C" Multiplier S = 1.5 m (mm)	"K" Multiplier HT = 2.1 m (mm)	HT = 2.4 m (mm)
MS18	250	250	200	200	200	13	170	13	300	13	570	13	570	13	300	13	190	16	230	16	300	300	16	300	13	350	0.63	0.92	0.54	0.51	0.29	0.88	0.48	1700	2425	2725
MS18	800	200	200	200	200	13	280	13	280	13	600	13	600	13	300	13	280	13	170	16	300	300	16	300	13	350	0.59	0.94	0.50	0.51	0.27	0.88	0.38	1700	2375	2675
MS18	1300	200	200	200	200	13	300	13	300	13	600	13	600	13	300	13	250	13	240	16	300	300	16	300	13	350	0.56	0.94	0.45	0.60	0.27	0.48	0.34	1700	2375	2675
MS18	1800	200	200	200	200	13	300	13	300	13	600	13	600	13	300	13	230	13	250	16	300	300	16	300	13	350	0.54	0.94	0.43	0.57	0.27	0.48	0.34	1700	2375	2675
MS18	2300	200	200	200	200	13	300	13	280	13	600	13	600	13	300	13	210	13	250	16	300	0	16	300	13	350	0.53	0.94	0.42	0.55	0.27	0.46	0.33	1700	2375	2675
MS18 MOD	225	275	225	200	200	16	240	13	280	13	500	13	500	13	300	13	210	13	160	16	300	300	16	300	13	350	0.64	0.91	0.55	0.51	0.29	0.88	0.52	1700	2475	2775
MS18 MOD	800	200	225	200	200	13	230	13	250	13	530	13	530	13	320	13	300	13	180	16	300	300	16	300	13	350	0.61	0.94	0.54	0.51	0.27	0.88	0.39	1700	2400	2700
MS18 MOD	1300	200	200	200	200	13	300	13	300	13	600	13	600	13	300	13	240	13	220	16	300	300	16	300	13	350	0.56	0.94	0.45	0.60	0.27	0.50	0.34	1700	2375	2675
MS18 MOD	1800	200	200	200	200	13	300	13	300	13	600	13	600	13	300	13	220	13	230	16	300	300	16	300	13	350	0.54	0.94	0.43	0.57	0.27	0.48	0.35	1700	2375	2675
MS18 MOD	2300	200	200	200	200	13	300	13	270	13	600	13	600	13	300	13	200	13	230	16	300	0	16	300	13	350	0.53	0.94	0.43	0.55	0.27	0.46	0.34	1700	2375	2675
MS18 or MS18 MOD	2800	200	200	200	200	13	300	13	240	13	600	13	600	13	300	13	190	13	220	16	300	0	16	300	13	350	0.52	0.94	0.42	0.53	0.27	0.43	0.33	1700	2375	2675
MS18 or MS18 MOD	3300	200	225	200	200	13	300	13	220	13	590	13	590	13	300	13	210	13	200	16	300	0	16	300	13	350	0.52	0.94	0.42	0.52	0.27	0.43	0.33	1700	2375	2700
MS18 or MS18 MOD	3800	200	200	200	200	13	300	13	220	13	600	13	600	13	300	13	160	13	220	16	300	0	16	300	13	350	0.50	0.94	0.41	0.51	0.27	0.42	0.32	1700	2375	2675
MS18 or MS18 MOD	4300	200	225	200	200	13	300	13	190	13	560	13	560	13	330	13	180	13	250	16	300	0	16	300	13	350	0.51	0.94	0.41	0.51	0.27	0.43	0.32	1700	2400	2700
MS18 or MS18 MOD	4800	200	225	200	200	13	300	13	180	13	510	13	510	13	310	13	170	13	230	16	300	0	16	300	13	350	0.50	0.94	0.41	0.50	0.27	0.43	0.32	1700	2400	2700
MS18 or MS18 MOD	5300	200	225	200	200	13	300	13	160	13	460	13	460	13	280	13	160	13	210	16	300	0	16	300	13	350	0.50	0.94	0.41	0.50	0.27	0.42	0.32	1700	2400	2700
MS18 or MS18 MOD	5800	200	250	225	200	13	300	13	190	13	420	13	420	13	300	13	180	13	240	16	300	0	16	300	13	350	0.50	0.94	0.40	0.50	0.27	0.43	0.32	1713	2425	2725
MS18 or MS18 MOD	6300	200	250	225	200	13	280	13	170	13	390	13	390	13	280	13	170	13	220	16	300	0	16	300	13	350	0.50	0.94	0.40	0.49	0.27	0.43	0.32	1713	2425	2725
MS18 or MS18 MOD	6775	225	250	225	200	13	300	13	160	13	430	13	430	13	260	13	160	13	200	16	300	0	16	300	13	350	0.50	0.93	0.41	0.50	0.27	0.42	0.32	1713	2450	2750
MS18 or MS18 MOD	7275	225	275	250	200	13	290	13	180	13	400	13	400	13	270	13	180	13	230	16	300	0	16	300	13	350	0.50	0.93	0.40	0.49	0.27	0.42	0.32	1725	2475	2775
MS18 or MS18 MOD	7775	225	275	250	200	13	270	13	170	13	380	13	380	13	260	13	170	13	210	16	300	0	16	300	13	350	0.50	0.93	0.40	0.49	0.27	0.42	0.32	1725	2475	2775
MS18 or MS18 MOD	8250	250	275	250	200	13	280	13	160	13	410	13	410	13	250	13	160	13	190	16	300	0	16	300	13	350	0.50	0.92	0.40	0.50	0.28	0.42	0.32	1725	2500	2800
MS18 or MS18 MOD	8750	250	300	250	200	13	270	16	240	13	390	13	390	13	260	16	240	13	220	16	300	0	16	300	13	350	0.51	0.93	0.40	0.51	0.29	0.42	0.32	1725	2525	2825
MS18 or MS18 MOD	9250	250	300	275	200	13	250	13	170	13	370	13	370	13	240	13	170	13	200	16	300	0	16	300	13	350	0.50	0.93	0.39	0.50	0.28	0.41	0.32	1738	2525	2825
MS18 or MS18 MOD	9725	275	300	275	200	13	250	13	160	13	360	13	360	13	230	13	160	13	190	16	300	0	16	300	13	350	0.50	0.93	0.40	0.50	0.28	0.41	0.32	1738	2550	2825

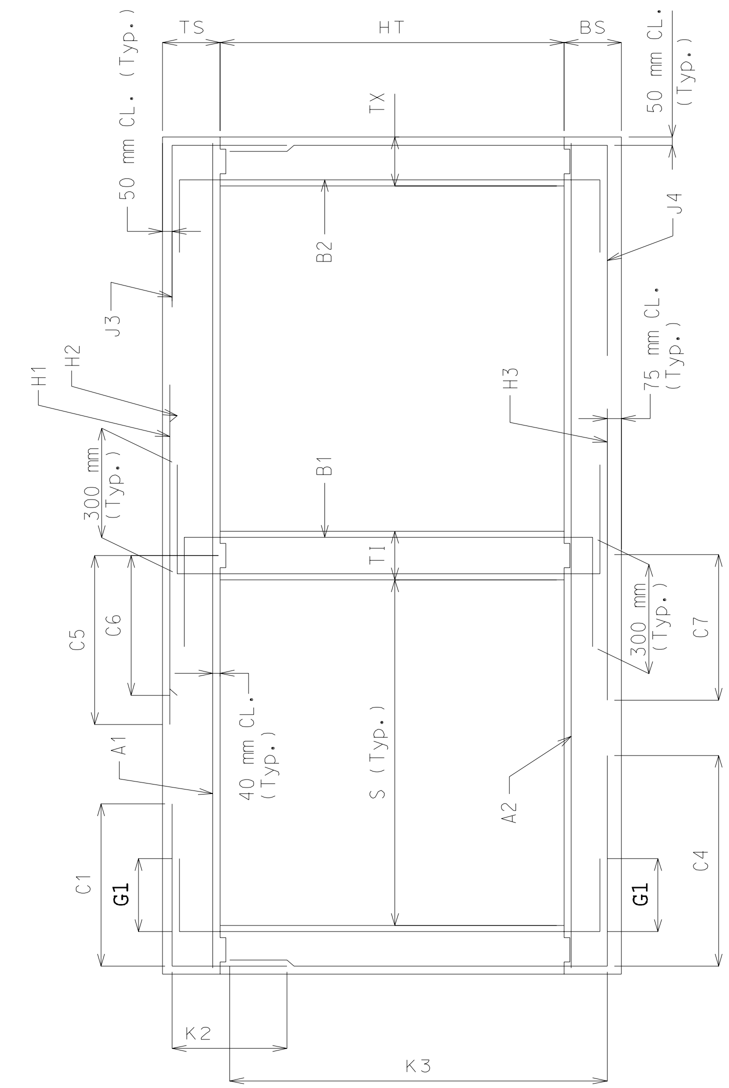

SECTION THRU BOX

NOTE: IF DESIGN FILL FALLS BETWEEN TABULATED FILLS, USE THE ADJACENT TABULATED FILL WHICH YIELDS THE GREATER MEMBER THICKNESS. IF THE MEMBER THICKNESSES ARE EQUAL, USE THE ADJACENT TABULATED FILL WHICH YIELDS THE GREATER AREA OF REINFORCEMENT.

SPECIAL DESIGNS ARE REQUIRED WHEN THE DESIGN FILL IS OUTSIDE THE RANGE OF TABULATED FILLS.

ALL DIMENSIONS ARE IN mm UNLESS OTHERWISE SPECIFIED.

COEFFICIENTS: DIMENSIONS MARKED WITH C# OR K# ARE THE PRODUCT OF THE COEFFICIENT AND ITS ASSOCIATED MULTIPLIER.

DESIGN FILL HEIGHT GIVEN IN THE TABLES IS THE HEIGHT FROM THE TOP OF THE EARTH FILL OR ROADWAY TO THE TOP OF THE TOP SLAB.

ALL CULVERTS MEET STRENGTH REQUIREMENTS FOR MILITARY 106 kN TANDEM AXLE LOADING.

MISSOURI HIGHWAY AND TRANSPORTATION COMMISSION			
	CONCRETE DOUBLE BOX CULVERT MEMBER SIZES AND REINFORCEMENT (MS18 & MS18 MOD LOADING)		
DATE:	EFFECTIVE: 04-01-2002	M703.45B	2/13

	DESIGN FILL	MEMBER THICKNESSES				Span (S) = 1.8 m; HT (m) = 1.2 or 1.5																															
						TOP SLAB BARS								BOTTOM SLAB BARS						WALL BARS								COEFFICIENTS (see note)								"C" Multiplier	"K" Multiplier	
		TS	BS	TX	TI	A1	Bars	J3	Bars	H1	Bars	H2	Bars	A2	Bars	J4	Bars	H3	Bars	B1	Bars	B2	Bars		F	Bars	J4		H3		J3		H1		H2		S = 1.8 m	HT = 1.2 m	HT = 1.5 m
	(mm)	Thick	Thick.	Thick	Thick.	Size	c to c	Size	c to c	Size	c to c	Size	c to c	Size	c to c	Size	c to c	Size	c to c	Size	c to c	G1	Size	c to c	Size	c to c	C4	K3	C7		C1	K2	C5		C6		mm	mm	mm
MS18	250	250	200	200	200	16	240	13	300	13	520	13	520	13	280	13	220	16	180	16	300	300	16	300	13	350	0.45	0.88	0.51		0.48	0.45	0.86		0.43		2000	1525	1825
MS18	800	200	225	200	200	13	230	13	300	13	450	13	450	13	280	13	300	16	200	16	300	300	16	300	13	350	0.37	0.91	0.48		0.47	0.44	0.62		0.32		2000	1475	1800
MS18	1300	200	200	200	200	13	300	13	300	13	560	13	560	13	300	13	300	13	170	16	300	300	16	300	13	350	0.36	0.91	0.43		0.38	0.44	0.46		0.32		2000	1475	1775
MS18	1800	200	200	200	200	13	300	13	300	13	520	13	520	13	290	13	300	13	180	16	300	300	16	300	13	350	0.35	0.91	0.41		0.35	0.44	0.44		0.30		2000	1475	1775
MS18	2300	200	200	200	200	13	300	13	300	13	490	13	490	13	270	13	300	13	170	16	300	0	16	300	13	350	0.35	0.91	0.40		0.34	0.44	0.42		0.30		2000	1475	1775
MS18 MOD	200	300	225	200	200	16	230	13	250	13	490	13	490	13	280	13	230	16	190	16	300	300	16	300	13	350	0.44	0.86	0.52		0.48	0.46	0.86		0.47		2000	1600	1900
MS18 MOD	800	200	225	200	200	13	190	13	250	13	370	13	370	13	270	13	300	16	200	16	300	300	16	300	13	350	0.37	0.91	0.50		0.48	0.43	0.66		0.32		2000	1500	1800
MS18 MOD	1300	200	200	200	200	13	300	13	300	13	490	13	490	13	270	13	300	16	230	16	300	300	16	300	13	350	0.36	0.91	0.44		0.39	0.44	0.47		0.32		2000	1475	1775
MS18 MOD	1800	200	200	200	200	13	300	13	300	13	480	13	480	13	270	13	300	13	160	16	300	300	16	300	13	350	0.35	0.91	0.41		0.35	0.44	0.45		0.31		2000	1475	1775
MS18 MOD	2300	200	225	200	200	13	300	13	300	13	450	13	450	13	300	13	300	13	200	16	300	0	16	300	13	350	0.34	0.91	0.40		0.34	0.43	0.43		0.30		2000	1500	1800
MS18 or MS18 MOD	2800	200	225	200	200	13	300	13	300	13	420	13	420	13	280	13	300	13	190	16	300	0	16	300	13	350	0.33	0.91	0.40		0.33	0.43	0.41		0.29		2000	1500	1800
MS18 or MS18 MOD	3300	200	225	200	200	13	280	13	300	13	390	13	390	13	250	13	300	13	170	16	300	0	16	300	13	350	0.33	0.91	0.39		0.33	0.43	0.41		0.29		2000	1500	1800
MS18 or MS18 MOD	3800	200	250	200	200	13	270	13	300	13	350	13	350	13	240	13	300	13	160	16	300	0	16	300	13	350	0.32	0.91	0.39		0.33	0.43	0.41		0.29		2000	1500	1825
MS18 or MS18 MOD	4300	200	225	200	200	13	270	13	300	13	360	13	360	13	240	13	300	13	160	16	300	0	16	300	13	350	0.32	0.91	0.39		0.33	0.43	0.40		0.29		2000	1500	1800
MS18 or MS18 MOD	4800	200	250	200	200	13	250	13	280	13	320	13	320	13	240	13	300	13	180	16	300	0	16	300	13	350	0.31	0.91	0.38		0.33	0.42	0.40		0.29		2000	1525	1825
MS18 or MS18 MOD	5275	225	250	200	200	13	250	13	300	13	340	13	340	13	230	13	300	13	160	16	300	0	16	300	13	350	0.31	0.90	0.39		0.32	0.43	0.40		0.29		2000	1550	1850
MS18 or MS18 MOD	5775	225	275	200	200	13	230	13	270	13	310	13	310	13	230	13	300	13	180	16	300	0	16	300	13	350	0.31	0.90	0.38		0.32	0.42	0.40		0.29		2000	1575	1875
MS18 or MS18 MOD	6250	250	275	200	200	13	240	13	270	13	330	13	330	13	220	13	280	16	240	16	300	0	16	300	13	350	0.31	0.89	0.40		0.31	0.43	0.40		0.29		2000	1600	1900
MS18 or MS18 MOD	6750	250	300	200	200	13	220	13	250	16	460	16	460	13	220	13	300	13	170	16	300	0	16	300	13	350	0.30	0.89	0.38		0.31	0.43	0.41		0.30		2000	1625	1925
MS18 or MS18 MOD	7225	275	300	200	200	13	210	13	240	16	430	16	430	13	210	13	270	16	230	16	300	0	16	300	13	350	0.30	0.89	0.40		0.31	0.44	0.41		0.30		2000	1650	1925
MS18 or MS18 MOD	7725	275	325	200	200	13	220	13	240	16	460	16	460	13	210	13	270	13	160	16	300	0	16	300	13	350	0.30	0.88	0.38		0.31	0.43	0.41		0.30		2000	1675	1975
MS18 or MS18 MOD	8225	275	325	200	200	13	200	13	230	16	430	16	430	13	200	13	270	16	240	16	300	0	16	300	13	350	0.30	0.88	0.39		0.31	0.43	0.41		0.30		2000	1675	1975
MS18 or MS18 MOD	8700	300	325	200	200	13	210	13	240	16	460	16	460	13	190	13	250	16	220	16	300	0	16	300	13	350	0.30	0.87	0.40		0.30	0.44	0.41		0.30		2000	1700	2000
MS18 or MS18 MOD	9200	300	350	200	200	13	200	13	220	16	430	16	430	13	200	13	240	16	240	16	300	0	16	300	13	350	0.30	0.87	0.39		0.30	0.43	0.41		0.30		2000	1725	2025
MS18 or MS18 MOD	9675	325	350	200	200	13	200	13	230	16	460	16	460	13	190	13	240	16	220	16	300	0	16	300	13	350	0.30	0.86	0.40		0.30	0.44	0.41		0.30		2000	1750	2050

	DESIGN FILL	MEMBER THICKNESSES				SPAN (S) = 1.8 m; HT (m) = 1.8 or 2.1																															
						TOP SLAB BARS								BOTTOM SLAB BARS						WALL BARS								COEFFICIENTS (see note)								"C" Multiplier	"K" Multiplier	
		TS	BS	TX	TI	A1	Bars	J3	Bars	H1	Bars	H2	Bars	A2	Bars	J4	Bars	H3	Bars	B1	Bars	B2	Bars		F	Bars	J4		H3		J3		H1		H2		S = 1.8 m	HT = 1.8 m	HT = 2.1 m
	(mm)	Thick	Thick.	Thick	Thick.	Size	c to c	Size	c to c	Size	c to c	Size	c to c	Size	c to c	Size	c to c	Size	c to c	Size	c to c	G1	Size	c to c	Size	c to c	C4	K3	C7		C1	K2	C5		C6		mm	mm	mm
MS18	250	250	225	200	200	16	230	13	280	13	500	13	500	13	270	13	200	16	180	16	300	300	16	300	13	350	0.49	0.91	0.52		0.48	0.33	0.86		0.45		2000	2125	2450
MS18	800	200	225	200	200	13	220	13	270	13	450	13	450	13	300	13	300	16	230	16	300	300	16	300	13	350	0.45	0.93	0.49		0.52	0.31	0.86		0.33		2000	2100	2400
MS18	1300	200	200	200	200	13	300	13	300	13	540	13	540	13	290	13	270	13	170	16	300	300	16	300	13	350	0.42	0.93	0.43		0.45	0.31	0.47		0.32		2000	2075	2375
MS18	1800	200	200	200	200	13	300	13	300	13	510	13	510	13	270	13	270	13	170	16	300	300	16	300	13	350	0.40	0.93	0.41		0.41	0.31	0.44		0.31		2000	2075	2375
MS18	2300	200	200	200	200	13	300	13	300	13	480	13	480	13	260	13	240	13	160	16	300	0	16	300	13	350	0.39	0.93	0.40		0.40	0.31	0.43		0.30		2000	2075	2375
MS18 MOD	200	300	225	200	200	16	230	13	250	13	430	13	430	13	270	13	210	16	180	16	300	300	16	300	13	350	0.48	0.89	0.51		0.48	0.34	0.86		0.47		2000	2200	2500
MS18 MOD	800	200	225	200	200	13	180	13	230	13	370	13	370	13	260	13	300	16	190	16	300	300	16	300	13	350	0.45	0.93	0.51		0.57	0.31	0.86		0.33		2000	2100	2400
MS18 MOD	1300	200	225	200	200	13	300	13	300	13	480	13	480	13	270	13	300	16	230	16	300	300	16	300	13	350	0.42	0.93	0.44		0.46	0.31	0.48		0.32		2000	2075	2400
MS18 MOD	1800	200	225	200	200	13	300	13	300	13	460	13	460	13	260	13	300	13	160	16	300	300	16	300	13	350	0.41	0.93	0.41		0.41	0.31	0.45		0.31		2000	2075	2400
MS18 MOD	2300	200	225	200	200	13	300	13	300	13	450	13	450	13	280	13	280	13	200	16	300	0	16	300	13	350	0.40	0.93	0.40		0.40	0.31	0.44		0.30		2000	2100	2400
MS18 or MS18 MOD	2800	200	225	200	200	13	300	13	270	13	420	13	420	13	270	13	270	13	180	16	300	0	16	300	13	350	0.39	0.93	0.39		0.39	0.31	0.41		0.29		2000	2100	2400
MS18 or MS18 MOD	3300	200	225	200	200	13	280	13	240	13	390	13	390	13	250	13	240	13	170	16	300	0	16	300	13	350	0.38	0.93	0.39		0.38	0.31	0.41		0.29		2000	2100	2400
MS18 or MS18 MOD	3800	200	250	200	200	13	270	13	230	13	350	13	350	13	260	13	240	13	200	16	300	0	16	300	13	350	0.38	0.93	0.38		0.38	0.30	0.41		0.29		2000	2125	2425
MS18 or MS18 MOD	4300	200	250	200	200	13	280	13	220	13	360	13	360	13	270	13	230	13	200	16	300	0	16	300	13	350	0.37	0.93	0.38		0.38	0.30	0.40		0.29		2000	2125	2425
MS18 or MS18 MOD	4800	200	250	200	200	13	250	13	200	13	320	13	320	13	240	13	210	13	180	16	300	0	16	300	13	350	0.37	0.93	0.38		0.38	0.30	0.40		0.29		2000	2125	2425
MS18 or MS18 MOD	5275	225	250	200	200	13	260	13	190	13	350	13	350	13	230	13	190	13	160	16	300	0	16	300	13	350	0.37	0.92	0.39		0.37	0.31	0.40		0.29		2000	2150	2450
MS18 or MS18 MOD	5775	225	275	200	200	13	240	13	180	13	310	13	310	13	230	13	180	13	180	16	300	0	16	300	13	350	0.37	0.92	0.38		0.37	0.31	0.40		0.29		2000	2175	2475
MS18 or MS18 MOD	6250	250	275	200	200	13	240	13	170	13	330	13	330	13	220	13	170	13	160	16	300	0	16	300	13	350	0.37	0.91	0.39		0.37	0.32	0.40		0.29		2000	2200	2500
MS18 or MS18 MOD	6750	250	300	200	200	13	230	13	160	13	310	13	310	13	220	13	170	13	170	16	300	0	16	300	13	350	0.37	0.92	0.38		0.37	0.31	0.40		0.29		2000	2225	2525
MS18 or MS18 MOD	7250	250	300	225	200	13	210	13	170	16	440	16	440	13	210	13	190	13	160	16	300	0	16	300	13	350	0.37	0.92	0.38		0.38	0.31	0.41		0.30		2013	2225	2525
MS18 or MS18 MOD	7725	275	325	225	200	13	220	13	170	13	310	13	310	13	220	13	170	13	170	16	300	0	16	300	13	350	0.37	0.91	0.38		0.38	0.32	0.40		0.29		2013	2275	2575
MS18 or MS18 MOD	8225	275	325	225	200	13	210	13	160	16	440	16	440	13	200	13	170	13	160	16	300	0	16	300	13	350	0.37	0.91	0.38		0.38	0.32	0.41		0.30		2013	2275	2575
MS18 or MS18 MOD	8700	300	325	225	200	13	220	13	160	13	310	13	310	13	200	13	160	16	230	16	300	0	16	300	13	350	0.37	0.90	0.39		0.37	0.32	0.40		0.29		2013	2300	2600
MS18 or MS18 MOD	9200	300	350	250	200	13	210	13	170	16	450	16	450	13	200	13	180	13	160	16	300	0	16	300	13	350	0.38	0.90	0.38		0.38	0.32	0.40		0.30		2025	2325	2625
MS18 or MS18 MOD	9700	300	350	250	200	13	200	13	160	16	430	16	430	13	190	13	170	16	230	16	300	0	16	300	13	350	0.37	0.90	0.39		0.38	0.32	0.40		0.30		2025	2325	2625

	DESIGN FILL	MEMBER THICKNESSES				SPAN (S) = 1.8 m; HT (m) = 2.4 or 2.7																															
						TOP SLAB BARS								BOTTOM SLAB BARS						WALL BARS								COEFFICIENTS (see note)								"C" Multiplier	"K" Multiplier	
		TS	BS	TX	TI	A1	Bars	J3	Bars	H1	Bars	H2	Bars	A2	Bars	J4	Bars	H3	Bars	B1	Bars	B2	Bars		F	Bars	J4		H3		J3		H1		H2		S = 1.8 m	HT = 2.4 m	HT = 2.7 m
	(mm)	Thick	Thick.	Thick	Thick.	Size	c to c	Size	c to c	Size	c to c	Size	c to c	Size	c to c	Size	c to c	Size	c to c	Size	c to c	G1	Size	c to c	Size	c to c	C4	K3	C7		C1	K2	C5		C6		mm	mm	mm
MS18	250	250	225	225	225	16	230	13	250	13	490	13	490	13	280	13	180	16	210	16	300	300	16	300	13	350	0.58	0.93	0.52		0.49	0.25	0.86		0.45		2025	2750	3050
MS18	800	200	225	225	225	13	220	13	240	13	440	13	440	13	280	13	230	16	230	16	300	300	16	300	13	350	0.55	0.95	0.50		0.49	0.24	0.86		0.33		2025	2700	3000
MS18	1300	200	200	225	225	13	300	13	280	13	540	13	540	13	270	13	180	13	160	16	300	300	16	300	13	350	0.50	0.95	0.43		0.57	0.24	0.47		0.32		2025	2675	2975
MS18	1800	200	200	225	225	13	300	13	270	13	510	13	510	13	260	13	170	13	170	16	300	300	16	300	13	350	0.48	0.95	0.40		0.51	0.24	0.45		0.31		2025	2675	2975
MS18	2300	200	225	225	225	13	300	13	240	13	480	13	480	13	290	13	190	13	210	16	300	0	16	300	13	350	0.48	0.95	0.39		0.49	0.24	0.43		0.30		2025	2700	3000
MS18 MOD	200	300	250	225	225	16	220	13	250	13	420	13	420	13	260	13	190	16	180	16	300	300	16	300	13	350	0.59	0.92	0.52		0.49	0.27	0.86		0.48		2025	2800	3125
MS18 MOD	800	200	225	225	225	13	180	13	210	13	370	13	370	13	240	13	210	16	190	16	300	300	16	300	13	350	0.55	0.95	0.51		0.49	0.24	0.86		0.34		2025	2700	3000
MS18 MOD	1300	200	225	225	225	13	300	13	250	13	480	13	480	13	280	13	210	13	180	16	300	300	16	300	13	350	0.51	0.95	0.44		0.57	0.24	0.49		0.32		2025	2700	3000
MS18 MOD	1800	200	225	225	225	13	300	13	250	13	450	13	450	13	280	13	200	13	200	16	300	300	16	300	13	350	0.49	0.95	0.41		0.51	0.24	0.46		0.31		2025	2700	3000
MS18 MOD	2300	200	225	225	225	13	300	13	240	13	450	13	450	13	270	13	190	13	190	16	300	0	16	300	13	350	0.48	0.95	0.40		0.49	0.24	0.44		0.30		2025	2700	3000
MS18 or MS18 MOD	2800	200	225	225	225	13	300	13	220	13	420	13	420	13	260	13	180	13	180	16	300	0	16	300	13	350	0.47	0.95	0.39		0.47	0.24	0.41		0.29		2025	2700	3000
MS18 or MS18 MOD	3300	200	225	225	225	13	290	13	200	13	390	13	390	13	240	13	160	13	170	16	300	0	16	300	13	350	0.46	0.95	0.39		0.47	0.24	0.41		0.29		2025	2700	3000
MS18 or MS18 MOD	3800	200	250	225	225	13	270	13	180	13	360	13	360	13	260	13	180	13	200	16	300	0	16	300	13	350	0.47	0.95	0.38		0.46	0.24	0.41		0.29		2025	2725	3025
MS18 or MS18 MOD	4300	200	250	225	225	13	290	13	170	13	370	13	370	13	270	13	170	13	210	16	300	0	16	300	13	350	0.46	0.95	0.37		0.46	0.24	0.40		0.29		2025	2725	3025
MS18 or MS18 MOD	4800	200	250	225	225	13	260	13	160	13	330	13	330	13	240	13	160	13	190	16	300	0	16	300	13	350	0.46	0.95	0.37		0.45	0.24	0.40		0.29		2025	2725	3025
MS18 or MS18 MOD	5275	225	250	225	225	13	240	16	230	13	320	13	320	13	220	16	220	13	160	16	300	0	16	300	13	350	0.46	0.95	0.38		0.45	0.28	0.40		0.29		2025	2750	3025
MS18 or MS18 MOD	5775	225	275	250	225	13	250	13	160	13	330	13	330	13	240	13	160	13	180	16	300	0	16	300	13	350	0.45	0.94	0.38		0.45	0.24	0.40		0.29		2038	2775	3075
MS18 or MS18 MOD	6275	225	275	250	225	13	230	16	240	16	460	16	460	13	220	16	230	13	170	16	300	0	16	300	13	350	0.46	0.94	0.38		0.46	0.26	0.40		0.30		2038	2775	3075
MS18 or MS18 MOD	6750	250	300	250	225	13	240	16	220	13	320	13	320	13	230	16	220	13	180	16	300	0	16	300	13	350	0.46	0.93	0.37		0.46	0.29	0.40		0.29		2038	2825	3125
MS18 or MS18 MOD	7250	250	300	250	225	13	230	16	200	16	470	16	470	13	220	16	200	13	160	16	300	0	16	290	13	350	0.46	0.93	0.37		0.46	0.26	0.40		0.29		2038	2825	3125
MS18 or MS18 MOD	7725	275	325	275	225	13	240	16	230	13	320	13	320	13	220	16	220	13	170	16	300	0	16	300	13	350	0.46	0.93	0.37		0.46	0.26	0.39		0.29		2050	2875	3175
MS18 or MS18 MOD	8225	275	325	275	225	13	230	16	220	16	470	16	470	13	210	16	210	13	160	16	300	0	16	300	13	350	0.46	0.93	0.37		0.46	0.29	0.40		0.29		2050	2875	3175
MS18 or MS18 MOD	8725	275	325	275	225	13	210	16	200	16	440	16	440	13	200	16	200	13	160	16	300	0	16	280	13	350	0.46	0.93	0.37		0.46	0.29	0.40		0.30		2050	2875	3175
MS18 or MS18 MOD	9200	300	350	300	225	13	220	16	220	13	310	13	310	13	210	16	220	13	160	16	300	0	16	300	13	350	0.46	0.92	0.37		0.46	0.27	0.39		0.29		2063	2925	3225
MS18 or MS18 MOD	9700	300	350	300	225	13	210	16	210	16	450	16	450	13	200	16	210	13	160	16	300	0	16	290	13	350	0.46	0.92	0.37		0.46	0.29	0.40		0.29		2063	2925	3225

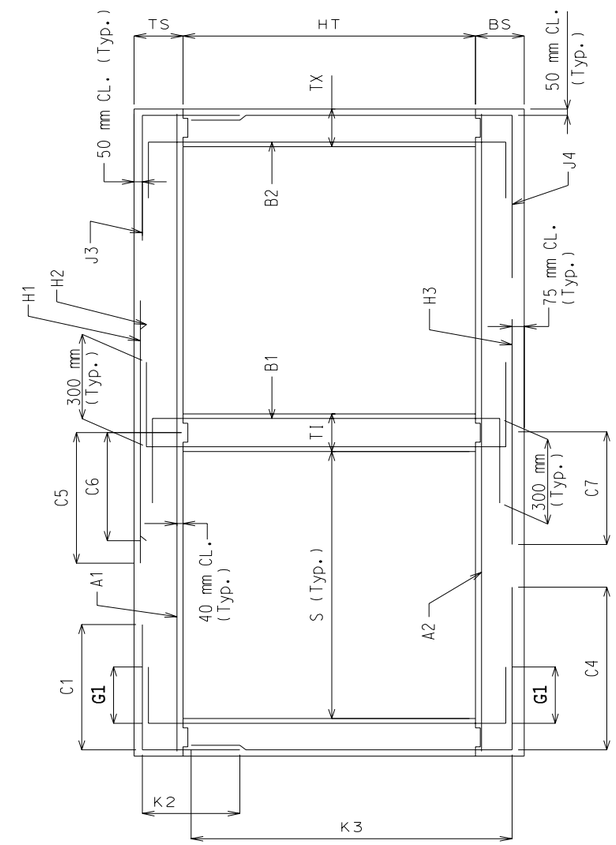

SECTION THRU BOX

NOTE: IF DESIGN FILL FALLS BETWEEN TABULATED FILLS, USE THE ADJACENT TABULATED FILL WHICH YIELDS THE GREATER MEMBER THICKNESS. IF THE MEMBER THICKNESSES ARE EQUAL, USE THE ADJACENT TABULATED FILL WHICH YIELDS THE GREATER AREA OF REINFORCEMENT.

SPECIAL DESIGNS ARE REQUIRED WHEN THE DESIGN FILL IS OUTSIDE THE RANGE OF TABULATED FILLS.

ALL DIMENSIONS ARE IN mm UNLESS OTHERWISE SPECIFIED.

COEFFICIENTS: DIMENSIONS MARKED WITH C# OR K# ARE THE PRODUCT OF THE COEFFICIENT AND ITS ASSOCIATED MULTIPLIER.

DESIGN FILL HEIGHT GIVEN IN THE TABLES IS THE HEIGHT FROM THE TOP OF THE EARTH FILL OR ROADWAY TO THE TOP OF THE TOP SLAB.

ALL CULVERTS MEET STRENGTH REQUIREMENTS FOR MILITARY 106 kN TANDEM AXLE LOADING.

MISSOURI HIGHWAY AND TRANSPORTATION COMMISSION

CONCRETE DOUBLE BOX CULVERT

MEMBER SIZES AND REINFORCEMENT

(MS18 & MS18 MOD LOADING)

DATE:	EFFECTIVE: 04-01-2002	M703.45B	3/13

Span (S) = 2.1 m; HT (m) = 1.2 or 1.5 or 1.8

Loading	Design Fill (mm)	TS Thick	BS Thick.	TX Thick	TI Thick.	Top Slab A1 Size	A1 Bars c to c	J3 Size	J3 Bars c to c	H1 Size	H1 Bars c to c	H2 Size	H2 Bars c to c	Bottom Slab A2 Size	A2 Bars c to c	J4 Size	J4 Bars c to c	H3 Size	H3 Bars c to c	Wall B1 Size	B1 Bars c to c	G1	B2 Size	B2 Bars c to c	F Size	F Bars c to c	J4 C4	J4 K3	H3 C7	J3 C1	J3 K2	H1 C5	H2 C6	"C" Multiplier S = 2.1 m (mm)	"K" Multiplier HT = 1.2 m (mm)	HT = 1.5 m (mm)	HT = 1.8 m (mm)
MS18	250	250	275	200	200	16	210	13	250	16	410	16	410	13	190	16	180	16	200	16	300	300	16	200	13	350	0.43	0.90	0.52	0.46	0.44	0.84	0.40	2300	1575	1875	2200
MS18	800	200	225	200	200	13	180	13	220	16	460	16	460	13	250	13	230	16	180	16	300	300	16	300	13	350	0.35	0.92	0.47	0.45	0.43	0.60	0.31	2300	1500	1800	2100
MS18	1300	200	200	200	200	13	270	13	300	13	380	13	380	13	240	13	250	16	180	16	300	300	16	300	13	350	0.34	0.92	0.42	0.37	0.44	0.45	0.29	2300	1475	1775	2075
MS18	1800	200	225	200	200	13	280	13	300	13	370	13	370	13	250	13	300	13	160	16	300	300	16	300	13	350	0.33	0.92	0.39	0.34	0.43	0.43	0.28	2300	1500	1800	2100
MS18	2300	200	225	200	200	13	270	13	300	13	340	13	340	13	230	13	300	16	230	16	300	0	16	300	13	350	0.32	0.92	0.39	0.32	0.43	0.41	0.28	2300	1500	1800	2100
MS18 MOD	200	300	300	200	200	16	210	13	250	16	390	16	390	13	170	16	180	16	200	16	300	300	16	180	13	350	0.42	0.88	0.53	0.46	0.45	0.84	0.45	2300	1650	1975	2275
MS18 MOD	775	225	250	200	200	13	160	13	200	16	450	16	450	13	240	13	220	16	170	16	300	300	16	300	13	350	0.35	0.91	0.49	0.49	0.43	0.71	0.32	2300	1550	1850	2150
MS18 MOD	1300	200	225	200	200	13	240	13	270	13	330	13	330	13	250	13	270	16	210	16	300	300	16	300	13	350	0.34	0.92	0.43	0.38	0.43	0.47	0.30	2300	1500	1800	2100
MS18 MOD	1800	200	225	200	200	13	250	13	280	13	330	13	330	13	230	13	280	16	220	16	300	300	16	300	13	350	0.33	0.92	0.40	0.34	0.43	0.43	0.29	2300	1500	1800	2100
MS18 MOD	2300	200	225	200	200	13	250	13	280	13	310	13	310	13	220	13	280	16	220	16	300	0	16	300	13	350	0.32	0.92	0.39	0.32	0.43	0.42	0.28	2300	1500	1800	2100
MS18 or MS18 MOD	2800	200	250	200	200	13	230	13	250	16	450	16	450	13	210	13	300	16	210	16	300	0	16	300	13	350	0.31	0.92	0.38	0.32	0.43	0.40	0.28	2300	1500	1825	2125
MS18 or MS18 MOD	3300	200	250	200	200	13	210	13	240	16	410	16	410	13	210	13	270	16	230	16	300	0	16	300	13	350	0.30	0.92	0.37	0.31	0.42	0.40	0.28	2300	1525	1825	2125
MS18 or MS18 MOD	3775	225	250	200	200	13	220	13	240	16	450	16	450	13	200	13	250	16	200	16	300	0	16	300	13	350	0.30	0.91	0.38	0.30	0.43	0.40	0.28	2300	1550	1850	2150
MS18 or MS18 MOD	4275	225	275	200	200	13	210	13	220	16	410	16	410	13	200	13	250	16	230	16	300	0	16	300	13	350	0.29	0.91	0.37	0.30	0.42	0.40	0.28	2300	1575	1875	2175
MS18 or MS18 MOD	4775	225	275	200	200	13	210	13	220	16	400	16	400	13	200	13	240	16	230	16	300	0	16	300	13	350	0.29	0.91	0.37	0.30	0.42	0.39	0.28	2300	1575	1875	2175
MS18 or MS18 MOD	5250	250	300	200	200	13	210	13	220	16	430	16	430	13	190	13	240	16	200	16	300	0	16	300	13	350	0.29	0.90	0.38	0.30	0.43	0.39	0.28	2300	1600	1900	2225
MS18 or MS18 MOD	5750	250	300	200	200	13	200	13	200	16	380	16	380	13	190	13	230	16	220	16	300	0	16	300	13	350	0.29	0.90	0.37	0.29	0.43	0.39	0.28	2300	1625	1925	2225
MS18 or MS18 MOD	6225	275	325	200	200	13	200	13	200	16	400	16	400	13	200	13	230	16	220	16	300	0	16	300	13	350	0.28	0.90	0.37	0.29	0.43	0.39	0.28	2300	1675	1975	2275
MS18 or MS18 MOD	6725	275	325	200	200	13	190	13	190	16	370	16	370	13	180	13	210	16	210	16	300	0	16	300	13	350	0.28	0.90	0.37	0.29	0.43	0.39	0.28	2300	1675	1975	2275
MS18 or MS18 MOD	7200	300	350	200	200	13	190	13	190	16	390	16	390	13	190	13	210	16	210	16	300	0	16	300	13	350	0.28	0.89	0.37	0.29	0.43	0.39	0.28	2300	1725	2025	2325
MS18 or MS18 MOD	7700	300	350	200	200	13	180	13	170	16	360	16	360	13	170	13	200	16	200	16	300	0	16	300	13	350	0.28	0.89	0.37	0.29	0.43	0.39	0.28	2300	1725	2025	2325
MS18 or MS18 MOD	8175	325	375	200	200	13	180	13	170	16	380	16	380	13	180	13	200	16	200	16	300	0	16	300	13	350	0.28	0.88	0.38	0.29	0.43	0.39	0.28	2300	1775	2075	2375
MS18 or MS18 MOD	8675	325	375	200	200	13	170	13	170	16	350	16	350	13	170	13	190	16	190	16	300	0	16	300	13	350	0.28	0.88	0.38	0.28	0.43	0.39	0.28	2300	1775	2075	2375
MS18 or MS18 MOD	9150	350	400	225	200	13	170	13	190	16	370	16	370	13	160	13	200	16	180	16	300	0	16	300	13	350	0.29	0.87	0.38	0.29	0.44	0.39	0.28	2313	1825	2100	2400
MS18 or MS18 MOD	9650	350	400	225	200	13	170	13	180	16	350	16	350	13	160	13	200	16	190	16	300	0	16	300	13	350	0.28	0.87	0.38	0.29	0.44	0.39	0.28	2313	1825	2125	2425

SPAN (S) = 2.1 m; HT (m) = 2.1 or 2.4

Loading	Design Fill (mm)	TS Thick	BS Thick.	TX Thick	TI Thick.	Top Slab A1 Size	A1 Bars c to c	J3 Size	J3 Bars c to c	H1 Size	H1 Bars c to c	H2 Size	H2 Bars c to c	Bottom Slab A2 Size	A2 Bars c to c	J4 Size	J4 Bars c to c	H3 Size	H3 Bars c to c	Wall B1 Size	B1 Bars c to c	G1	B2 Size	B2 Bars c to c	F Size	F Bars c to c	J4 C4	J4 K3	H3 C7	J3 C1	J3 K2	H1 C5	H2 C6	"C" Multiplier S = 2.1 m (mm)	"K" Multiplier HT = 2.1 m (mm)	HT = 2.4 m (mm)
MS18	250	250	250	200	200	16	210	13	220	16	390	16	390	13	170	16	160	16	190	16	300	300	16	200	13	350	0.49	0.92	0.51	0.46	0.28	0.84	0.42	2300	2475	2775
MS18	800	200	225	200	200	13	170	13	190	16	450	16	450	13	240	13	190	16	170	16	300	300	16	300	13	350	0.43	0.94	0.47	0.50	0.27	0.84	0.31	2300	2400	2700
MS18	1300	200	225	200	200	13	270	13	240	13	370	13	370	13	260	13	230	16	230	16	300	300	16	300	13	350	0.40	0.94	0.42	0.44	0.27	0.47	0.30	2300	2400	2700
MS18	1800	200	225	200	200	13	270	13	240	13	360	13	360	13	240	13	230	16	240	16	300	300	16	300	13	350	0.39	0.94	0.40	0.40	0.27	0.43	0.29	2300	2400	2700
MS18	2300	200	225	200	200	13	260	13	220	13	340	13	340	13	220	13	210	16	230	16	300	0	16	300	13	350	0.37	0.94	0.38	0.38	0.27	0.41	0.28	2300	2400	2700
MS18 MOD	200	300	275	200	200	16	200	13	220	16	350	16	350	13	160	16	160	16	190	16	300	300	16	200	13	350	0.50	0.91	0.52	0.46	0.29	0.84	0.46	2300	2550	2850
MS18 MOD	775	225	250	200	200	13	160	13	180	16	440	16	440	13	230	13	180	16	160	16	300	300	16	300	13	350	0.44	0.93	0.49	0.46	0.27	0.84	0.32	2300	2450	2750
MS18 MOD	1300	200	225	200	200	13	230	13	230	13	330	13	330	13	240	13	210	16	200	16	300	300	16	300	13	350	0.40	0.94	0.43	0.44	0.27	0.49	0.30	2300	2400	2700
MS18 MOD	1800	200	225	200	200	13	250	13	230	13	330	13	330	13	220	13	210	16	220	16	300	300	16	300	13	350	0.39	0.94	0.40	0.40	0.27	0.44	0.29	2300	2400	2700
MS18 MOD	2300	200	225	200	200	13	240	13	210	13	320	13	320	13	210	13	200	16	210	16	300	0	16	300	13	350	0.37	0.94	0.39	0.38	0.27	0.42	0.28	2300	2400	2700
MS18 or MS18 MOD	2800	200	250	200	200	13	230	13	190	16	450	16	450	13	220	13	210	13	160	16	300	0	16	300	13	350	0.37	0.94	0.37	0.37	0.27	0.40	0.28	2300	2425	2725
MS18 or MS18 MOD	3300	200	250	200	200	13	210	13	180	16	410	16	410	13	210	13	190	16	230	16	300	0	16	300	13	350	0.36	0.94	0.37	0.36	0.27	0.40	0.27	2300	2425	2725
MS18 or MS18 MOD	3775	225	275	200	200	13	230	13	170	16	440	16	440	13	220	13	180	13	160	16	300	0	16	300	13	350	0.35	0.93	0.37	0.36	0.27	0.40	0.28	2300	2475	2775
MS18 or MS18 MOD	4275	225	275	200	200	13	210	13	160	16	410	16	410	13	200	13	160	16	230	16	300	0	16	300	13	350	0.35	0.93	0.37	0.35	0.27	0.40	0.28	2300	2475	2775
MS18 or MS18 MOD	4775	225	275	200	200	13	210	16	230	16	410	16	410	13	200	16	240	16	230	16	300	0	16	300	13	350	0.35	0.93	0.37	0.36	0.28	0.39	0.28	2300	2475	2775
MS18 or MS18 MOD	5250	250	300	200	200	13	220	16	220	16	430	16	430	13	210	16	220	16	240	16	300	0	16	300	13	350	0.35	0.93	0.37	0.36	0.29	0.39	0.28	2300	2525	2825
MS18 or MS18 MOD	5750	250	300	225	200	13	200	13	160	16	390	16	390	13	190	13	160	16	220	16	300	0	16	300	13	350	0.35	0.93	0.37	0.35	0.28	0.39	0.28	2313	2525	2825
MS18 or MS18 MOD	6225	275	325	225	200	13	210	16	230	16	410	16	410	13	200	13	160	16	230	16	300	0	16	300	13	350	0.35	0.92	0.37	0.36	0.29	0.39	0.28	2313	2575	2875
MS18 or MS18 MOD	6725	275	325	225	200	13	190	16	220	16	380	16	380	13	180	16	220	16	210	16	300	0	16	300	13	350	0.35	0.92	0.37	0.36	0.32	0.39	0.27	2313	2575	2875
MS18 or MS18 MOD	7200	300	350	250	200	13	200	13	160	16	400	16	400	13	190	13	160	16	220	16	300	0	16	300	13	350	0.35	0.91	0.37	0.36	0.28	0.39	0.28	2325	2625	2925
MS18 or MS18 MOD	7700	300	350	250	200	13	190	16	230	16	380	16	380	13	180	16	240	16	210	16	300	0	16	300	13	350	0.36	0.91	0.37	0.36	0.29	0.39	0.27	2325	2625	2925
MS18 or MS18 MOD	8175	325	375	250	200	13	190	16	220	16	390	16	390	13	170	16	220	16	190	16	300	0	16	300	13	350	0.36	0.90	0.37	0.36	0.30	0.39	0.27	2325	2675	2950
MS18 or MS18 MOD	8675	325	375	250	200	13	180	16	200	16	370	16	370	13	170	16	220	16	200	16	300	0	16	300	13	350	0.36	0.90	0.37	0.36	0.33	0.39	0.27	2325	2675	2975
MS18 or MS18 MOD	9150	350	375	275	200	13	180	16	220	16	360	16	360	13	170	16	240	16	190	16	300	0	16	300	13	350	0.36	0.90	0.37	0.36	0.30	0.38	0.27	2338	2700	2975
MS18 or MS18 MOD	9650	350	400	275	200	13	180	16	220	16	370	16	370	13	170	16	230	16	200	16	300	0	16	300	13	350	0.36	0.90	0.36	0.36	0.30	0.38	0.27	2338	2725	3025

SPAN (S) = 2.1 m; HT (m) = 2.7 or 3

Loading	Design Fill (mm)	TS Thick	BS Thick.	TX Thick	TI Thick.	Top Slab A1 Size	A1 Bars c to c	J3 Size	J3 Bars c to c	H1 Size	H1 Bars c to c	H2 Size	H2 Bars c to c	Bottom Slab A2 Size	A2 Bars c to c	J4 Size	J4 Bars c to c	H3 Size	H3 Bars c to c	Wall B1 Size	B1 Bars c to c	G1	B2 Size	B2 Bars c to c	F Size	F Bars c to c	J4 C4	J4 K3	H3 C7	J3 C1	J3 K2	H1 C5	H2 C6	"C" Multiplier S = 2.1 m (mm)	"K" Multiplier HT = 2.7 m (mm)	HT = 3.0 m (mm)
MS18	250	250	275	225	225	16	210	13	200	16	400	16	400	13	170	16	170	16	220	16	300	300	16	280	13	350	0.61	0.94	0.53	0.46	0.23	0.84	0.41	2325	3100	3400
MS18	800	200	225	225	225	13	170	13	180	16	450	16	450	13	220	16	240	16	170	16	300	300	16	300	13	350	0.52	0.95	0.47	0.46	0.22	0.84	0.31	2325	3000	3300
MS18	1300	200	225	225	225	13	270	13	210	13	370	13	370	13	250	13	160	16	220	16	300	300	16	300	13	350	0.48	0.95	0.42	0.53	0.22	0.47	0.30	2325	3000	3300
MS18	1800	200	225	225	225	13	280	13	200	13	370	13	370	13	230	16	240	16	240	16	300	300	16	300	13	350	0.47	0.95	0.39	0.47	0.22	0.43	0.29	2325	3000	3300
MS18	2300	200	225	225	225	13	260	13	190	13	340	13	340	13	210	16	220	16	230	16	300	0	16	300	13	350	0.45	0.95	0.38	0.45	0.22	0.41	0.28	2325	3000	3300
MS18 MOD	200	300	300	225	225	16	200	13	200	16	370	16	370	13	160	16	160	16	210	16	300	300	16	250	13	350	0.61	0.93	0.53	0.46	0.24	0.84	0.45	2325	3175	3475
MS18 MOD	775	225	250	225	225	13	160	13	170	16	440	16	440	13	220	13	160	16	160	16	300	300	16	300	13	350	0.53	0.95	0.49	0.46	0.22	0.84	0.32	2325	3050	3350
MS18 MOD	1300	200	225	225	225	13	230	13	190	13	330	13	330	13	220	13	160	16	200	16	300	300	16	300	13	350	0.48	0.95	0.42	0.54	0.22	0.49	0.30	2325	3000	3300
MS18 MOD	1800	200	225	225	225	13	250	13	190	13	330	13	330	13	210	16	230	16	220	16	300	300	16	300	13	350	0.47	0.95	0.40	0.47	0.22	0.44	0.29	2325	3000	3300
MS18 MOD	2300	200	250	225	225	13	250	13	180	13	320	13	320	13	210	13	170	16	210	16	300	0	16	300	13	350	0.46	0.95	0.38	0.45	0.22	0.42	0.28	2325	3000	3325
MS18 or MS18 MOD	2800	200	250	225	225	13	240	13	160	16	460	16	460	13	220	13	160	13	160	16	300	0	16	300	13	350	0.45	0.95	0.37	0.44	0.21	0.40	0.28	2325	3025	3325
MS18 or MS18 MOD	3300	200	250	225	225	13	220	16	240	16	430	16	430	13	200	16	220	16	230	16	300	0	16	300	13	350	0.45	0.95	0.37	0.44	0.23	0.39	0.28	2325	3025	3325
MS18 or MS18 MOD	3775	225	275	225	225	13	200	16	210	16	390	16	390	13	210	16	210	13	160	16	300	0	16	300	13	350	0.45	0.95	0.36	0.44	0.23	0.39	0.28	2325	3075	3350
MS18 or MS18 MOD	4275	225	275	225	225	13	210	16	200	16	420	16	420	13	200	16	190	16	230	16	300	0	16	290	13	350	0.44	0.95	0.37	0.44	0.26	0.39	0.28	2325	3075	3375
MS18 or MS18 MOD	4775	225	275	250	225	13	220	16	230	16	430	16	430	13	200	16	220	16	240	16	300	0	16	300	13	350	0.43	0.95	0.36	0.43	0.26	0.39	0.28	2338	3075	3375
MS18 or MS18 MOD	5250	250	300	250	225	13	210	16	200	16	400	16	400	13	210	16	200	13	160	16	300	0	16	290	13	350	0.43	0.95	0.36	0.43	0.26	0.39	0.28	2338	3125	3400
MS18 or MS18 MOD	5750	250	300	250	225	13	210	16	190	16	410	16	410	13	200	16	180	16	220	16	300	0	16	280	13	350	0.43	0.94	0.36	0.43	0.26	0.39	0.27	2338	3125	3425
MS18 or MS18 MOD	6225	275	325	275	225	13	200	16	210	16	390	16	390	13	200	16	200	16	230	16	300	0	16	300	13	350	0.43	0.94	0.36	0.43	0.26	0.38	0.27	2350	3175	3450
MS18 or MS18 MOD	6725	275	325	275	225	13	200	16	190	16	400	16	400	13	190	16	190	16	220	16	300	0	16	280	13	350	0.43	0.93	0.36	0.43	0.26	0.38	0.27	2350	3175	3475
MS18 or MS18 MOD	7200	300	350	275	225	13	190	16	180	16	390	16	390	13	180	16	180	16	210	16	300	0	16	270	13	350	0.43	0.93	0.36	0.43	0.27	0.38	0.27	2350	3225	3475
MS18 or MS18 MOD	7700	300	350	300	225	13	190	16	200	16	400	16	400	13	180	16	190	16	210	16	300	0	16	280	13	350	0.43	0.93	0.36	0.43	0.27	0.38	0.27	2363	3225	3525
MS18 or MS18 MOD	8200	300	350	300	225	13	180	16	190	16	370	16	370	13	170	16	180	16	200	16	300	0	16	270	13	350	0.43	0.93	0.36	0.43	0.27	0.38	0.27	2363	3225	3525
MS18 or MS18 MOD	8675	325	375	300	225	13	190	16	180	16	390	16	390	13	180	16	180	16	210	16	300	0	16	260	13	350	0.43	0.92	0.36	0.43	0.27	0.38	0.27	2363	3275	3575
MS18 or MS18 MOD	9175	325	375	325	225	13	180	16	190	16	370	16	370	13	170	16	190	16	200	16	300	0	16	270	13	350	0.43	0.92	0.36	0.43	0.27	0.38	0.27	2375	3275	3575
MS18 or MS18 MOD	9650	350	400	325	225	13	180	16	180	16	390	16	390	13	170	16	180	16	210	16	300	0	16	260	13	350	0.43	0.92	0.35	0.43	0.27	0.37	0.27	2375	3325	3625

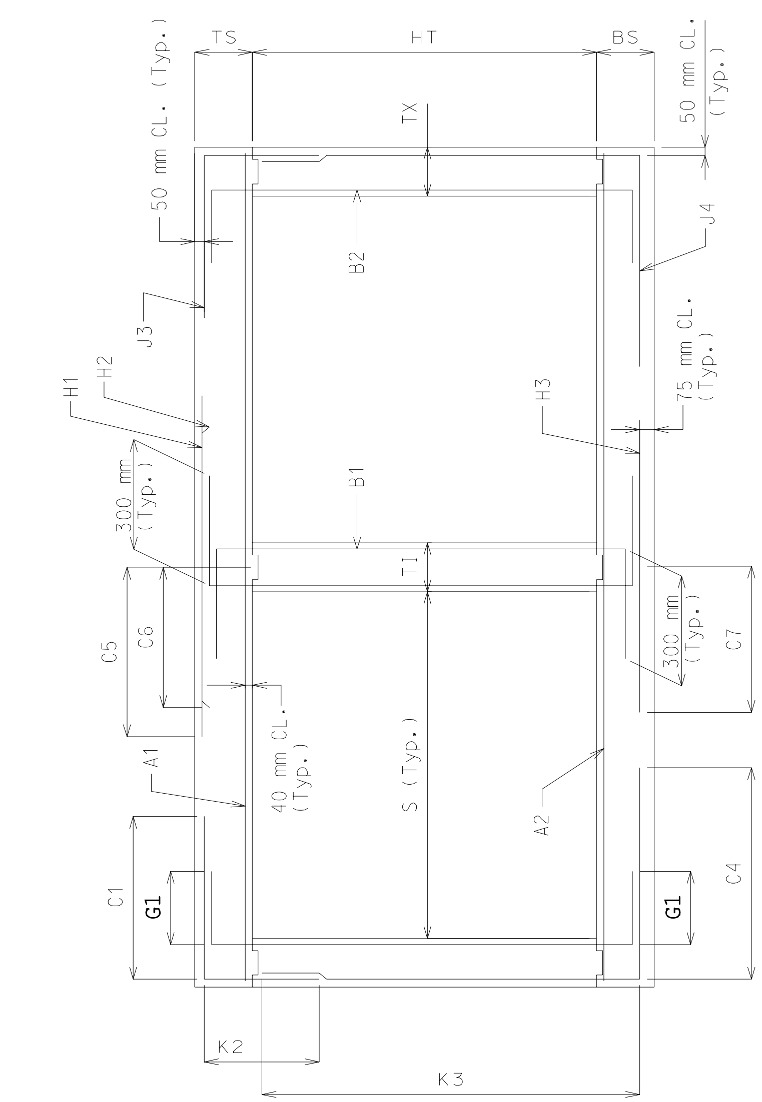

SECTION THRU BOX

NOTE: IF DESIGN FILL FALLS BETWEEN TABULATED FILLS, USE THE ADJACENT TABULATED FILL WHICH YIELDS THE GREATER MEMBER THICKNESS. IF THE MEMBER THICKNESSES ARE EQUAL, USE THE ADJACENT TABULATED FILL WHICH YIELDS THE GREATER AREA OF REINFORCEMENT.

SPECIAL DESIGNS ARE REQUIRED WHEN THE DESIGN FILL IS OUTSIDE THE RANGE OF TABULATED FILLS.

ALL DIMENSIONS ARE IN mm UNLESS OTHERWISE SPECIFIED.

COEFFICIENTS: DIMENSIONS MARKED WITH C# OR K# ARE THE PRODUCT OF THE COEFFICIENT AND ITS ASSOCIATED MULTIPLIER.

DESIGN FILL HEIGHT GIVEN IN THE TABLES IS THE HEIGHT FROM THE TOP OF THE EARTH FILL OR ROADWAY TO THE TOP OF THE TOP SLAB.

ALL CULVERTS MEET STRENGTH REQUIREMENTS FOR MILITARY 106 kN TANDEM AXLE LOADING.

MISSOURI HIGHWAY AND TRANSPORTATION COMMISSION

CONCRETE DOUBLE BOX CULVERT

MEMBER SIZES AND REINFORCEMENT

(MS18 & MS18 MOD LOADING)

DATE: | EFFECTIVE: 04-01-2002 | **M703.45B**

Span (S) = 2.4 m; HT (m) = 1.5 or 1.8 or 2.1

	DESIGN FILL	MEMBER THICKNESSES				TOP SLAB BARS								BOTTOM SLAB BARS						WALL BARS								COEFFICIENTS (see note)								"C" Multiplier	"K" Multiplier		
		TS	BS	TX	TI	A1	Bars	J3	Bars	H1	Bars	H2	Bars	A2	Bars	J4	Bars	H3	Bars	B1	Bars	B2	Bars		F	Bars	J4		H3		J3		H1		H2		S = 2.4 m	HT = 1.5 m	HT = 1.8 m	HT = 2.1 m
	(mm)	Thick	Thick.	Thick	Thick.	Size	c to c	Size	c to c	Size	c to c	Size	c to c	Size	c to c	Size	c to c	Size	c to c	Size	c to c	G1	Size	c to c	Size	c to c	C4	K3	C7		C1	K2	C5		C6		mm	mm	mm	mm
MS18	250	250	250	200	200	16	180	13	190	16	340	16	340	13	160	19	210	16	160	16	300	300	16	170	13	350	0.45	0.91	0.49		0.44	0.37	0.83		0.38		2600	1875	2175	2475
	800	200	225	200	200	16	220	13	170	16	330	16	330	13	190	13	160	19	190	16	300	300	16	290	13	350	0.34	0.93	0.48		0.43	0.36	0.58		0.30		2600	1800	2100	2400
	1300	200	225	200	200	13	210	13	230	16	430	16	430	13	220	13	230	16	170	16	300	300	16	300	13	350	0.33	0.93	0.41		0.36	0.36	0.45		0.28		2600	1800	2100	2400
	1800	200	225	200	200	13	220	13	230	16	420	16	420	13	200	13	230	16	180	16	300	300	16	300	13	350	0.32	0.93	0.39		0.33	0.36	0.42		0.27		2600	1800	2100	2400
	2300	200	250	200	200	13	200	13	220	16	380	16	380	13	200	13	220	16	210	16	300	0	16	300	13	350	0.30	0.93	0.37		0.31	0.35	0.40		0.26		2600	1825	2125	2425
MS18 MOD	200	300	275	200	200	16	180	13	200	16	320	16	320	16	230	19	200	16	160	16	300	300	16	160	13	350	0.43	0.90	0.49		0.44	0.38	0.83		0.42		2600	1950	2250	2550
	775	225	250	200	200	16	200	13	160	19	420	19	420	13	160	16	220	19	190	16	300	300	16	300	13	350	0.35	0.92	0.50		0.48	0.36	0.72		0.33		2600	1850	2150	2450
	1300	200	225	200	200	13	190	13	200	16	370	16	370	13	200	13	200	19	220	16	300	300	16	300	13	350	0.33	0.93	0.44		0.37	0.36	0.47		0.28		2600	1800	2100	2400
	1800	200	250	200	200	13	200	13	210	16	380	16	380	13	200	13	230	16	170	16	300	300	16	300	13	350	0.31	0.93	0.39		0.33	0.36	0.43		0.27		2600	1800	2125	2425
	2300	200	250	200	200	13	190	13	210	16	360	16	360	13	190	13	220	16	200	16	300	0	16	300	13	350	0.30	0.93	0.37		0.31	0.35	0.41		0.26		2600	1825	2125	2425
MS18 or MS18 MOD	2800	200	250	200	200	13	180	13	190	16	330	16	330	13	180	13	220	16	190	16	300	0	16	300	13	350	0.30	0.93	0.36		0.30	0.35	0.39		0.25		2600	1825	2125	2425
	3275	225	275	200	200	13	190	13	190	16	360	16	360	13	180	13	220	16	200	16	300	0	16	300	13	350	0.29	0.92	0.36		0.29	0.36	0.38		0.26		2600	1875	2175	2475
	3750	250	275	200	200	13	180	13	190	16	330	16	330	13	170	13	190	16	170	16	300	0	16	300	13	350	0.28	0.91	0.37		0.29	0.36	0.38		0.26		2600	1875	2200	2500
	4250	250	300	200	200	13	180	13	170	16	340	16	340	13	180	13	190	16	190	16	300	0	16	300	13	350	0.28	0.92	0.36		0.29	0.36	0.38		0.26		2600	1925	2225	2525
	4725	275	325	200	200	13	180	13	170	16	360	16	360	13	170	13	190	16	160	16	300	0	16	300	13	350	0.27	0.91	0.37		0.28	0.37	0.38		0.26		2600	1950	2250	2575
	5225	275	325	200	200	13	180	13	170	16	350	16	350	13	180	13	180	16	190	16	300	0	16	300	13	350	0.27	0.91	0.36		0.28	0.36	0.38		0.26		2600	1975	2275	2575
	5725	275	325	200	200	13	170	13	160	16	320	16	320	13	160	13	170	16	180	16	300	0	16	300	13	350	0.27	0.91	0.36		0.28	0.36	0.38		0.26		2600	1975	2275	2575
	6200	300	350	200	200	13	170	16	230	16	330	16	330	13	170	13	170	16	180	16	300	0	16	300	13	350	0.27	0.90	0.36		0.28	0.37	0.38		0.26		2600	2025	2325	2625
	6675	325	350	200	200	13	170	16	230	16	340	16	340	13	160	16	240	16	160	16	300	0	16	300	13	350	0.27	0.89	0.36		0.28	0.38	0.38		0.26		2600	2050	2350	2650
	7175	325	375	225	200	13	160	13	160	16	320	16	320	13	160	13	170	16	170	16	300	0	16	300	13	350	0.27	0.89	0.36		0.28	0.37	0.38		0.26		2613	2075	2375	2675
	7650	350	400	225	200	13	160	13	160	16	330	16	330	13	160	13	170	16	180	16	300	0	16	300	13	350	0.27	0.89	0.36		0.28	0.37	0.38		0.26		2613	2125	2425	2725
	8150	350	400	225	200	16	240	16	230	16	310	16	310	16	230	13	170	16	170	16	300	0	16	300	13	350	0.27	0.89	0.36		0.28	0.37	0.38		0.26		2613	2125	2425	2725
	8625	375	425	225	200	16	240	16	230	16	320	16	320	16	240	13	160	16	170	16	300	0	16	300	13	350	0.27	0.88	0.36		0.33	0.38	0.42		0.31		2613	2175	2475	2775
	9125	375	425	250	200	16	230	13	160	19	430	19	430	16	220	13	170	16	160	16	300	0	16	300	13	350	0.28	0.88	0.36		0.30	0.38	0.45		0.33		2625	2175	2475	2775
	9600	400	450	250	200	16	230	13	160	16	310	16	310	16	230	13	170	16	160	16	300	0	16	300	13	350	0.27	0.87	0.36		0.30	0.38	0.42		0.31		2625	2225	2525	2825

SPAN (S) = 2.4 m; HT (m) = 2.4 or 2.7

	DESIGN FILL	MEMBER THICKNESSES				TOP SLAB BARS								BOTTOM SLAB BARS						WALL BARS								COEFFICIENTS (see note)								"C" Multiplier	"K" Multiplier	
		TS	BS	TX	TI	A1	Bars	J3	Bars	H1	Bars	H2	Bars	A2	Bars	J4	Bars	H3	Bars	B1	Bars	B2	Bars		F	Bars	J4		H3		J3		H1		H2		S = 2.4 m	HT = 2.4 m	HT = 2.7 m
	(mm)	Thick	Thick.	Thick	Thick.	Size	c to c	Size	c to c	Size	c to c	Size	c to c	Size	c to c	Size	c to c	Size	c to c	Size	c to c	G1	Size	c to c	Size	c to c	C4	K3	C7		C1	K2	C5		C6		mm	mm	mm
MS18	250	250	250	225	225	16	180	13	190	16	330	16	330	13	160	19	210	16	160	16	300	300	16	180	13	350	0.46	0.93	0.49		0.44	0.25	0.83		0.38		2625	2775	3075
	800	200	250	225	225	16	220	13	160	16	320	16	320	13	180	16	230	19	190	16	300	300	16	300	13	350	0.41	0.95	0.48		0.51	0.24	0.61		0.30		2625	2700	3025
	1300	200	225	225	225	13	210	13	210	16	420	16	420	13	210	13	170	16	170	16	300	300	16	300	13	350	0.38	0.95	0.41		0.42	0.24	0.46		0.28		2625	2700	3000
	1800	200	225	225	225	13	210	13	210	16	410	16	410	13	190	13	170	16	170	16	300	300	16	300	13	350	0.37	0.95	0.39		0.39	0.24	0.42		0.27		2625	2700	3000
	2300	200	250	225	225	13	200	13	190	16	380	16	380	13	190	13	190	16	210	16	300	0	16	300	13	350	0.36	0.95	0.37		0.36	0.24	0.40		0.26		2625	2725	3025
MS18 MOD	200	300	275	225	225	16	180	13	190	16	310	16	310	16	220	19	190	19	220	16	300	300	16	180	13	350	0.49	0.92	0.52		0.44	0.26	0.83		0.43		2625	2850	3150
	775	225	250	225	225	16	190	16	220	19	410	19	410	13	160	16	200	19	190	16	300	300	16	300	13	350	0.42	0.94	0.50		0.45	0.28	0.85		0.33		2625	2750	3050
	1300	200	250	225	225	13	180	13	190	16	370	16	370	13	200	13	180	19	220	16	300	300	16	300	13	350	0.39	0.95	0.44		0.43	0.24	0.48		0.28		2625	2700	3025
	1800	200	250	225	225	13	200	13	190	16	370	16	370	13	200	13	190	16	200	16	300	300	16	300	13	350	0.37	0.95	0.39		0.39	0.24	0.43		0.27		2625	2725	3025
	2300	200	250	225	225	13	190	13	180	16	350	16	350	13	180	13	190	16	200	16	300	0	16	300	13	350	0.36	0.95	0.37		0.36	0.24	0.41		0.26		2625	2725	3025
MS18 or MS18 MOD	2800	200	250	225	225	13	180	13	170	16	330	16	330	13	170	13	180	16	190	16	300	0	16	300	13	350	0.35	0.95	0.36		0.35	0.24	0.39		0.26		2625	2725	3025
	3275	225	275	225	225	13	190	13	160	16	360	16	360	13	180	13	170	16	200	16	300	0	16	300	13	350	0.34	0.94	0.36		0.35	0.24	0.38		0.26		2625	2775	3075
	3775	225	275	225	225	13	170	16	230	16	330	16	330	13	170	13	160	16	180	16	300	0	16	300	13	350	0.34	0.94	0.36		0.35	0.28	0.38		0.26		2625	2775	3075
	4250	250	300	225	225	13	180	16	220	16	350	16	350	13	170	16	230	16	190	16	300	0	16	300	13	350	0.34	0.93	0.36		0.34	0.29	0.38		0.26		2625	2825	3125
	4725	275	325	225	225	13	190	16	210	16	360	16	360	13	180	16	220	16	200	16	300	0	16	300	13	350	0.34	0.93	0.36		0.34	0.29	0.38		0.26		2625	2875	3175
	5225	275	325	225	225	13	180	16	190	16	340	16	340	13	170	16	200	16	190	16	300	0	16	300	13	350	0.34	0.93	0.36		0.34	0.29	0.38		0.26		2625	2875	3175
	5725	275	325	225	225	13	170	16	180	16	330	16	330	13	160	16	190	16	180	16	300	0	16	300	13	350	0.33	0.93	0.35		0.34	0.29	0.37		0.26		2625	2875	3175
	6200	300	350	250	225	13	180	16	200	16	340	16	340	13	170	16	210	16	190	16	300	0	16	300	13	350	0.34	0.92	0.35		0.34	0.29	0.37		0.26		2638	2925	3225
	6700	300	350	250	225	13	160	16	190	16	320	16	320	13	160	16	200	16	170	16	300	0	16	300	13	350	0.33	0.92	0.35		0.34	0.29	0.37		0.26		2638	2925	3225
	7175	325	375	250	225	13	160	16	180	16	330	16	330	13	160	16	190	16	180	16	300	0	16	300	13	350	0.33	0.91	0.35		0.34	0.30	0.37		0.26		2638	2975	3275
	7650	350	400	275	225	13	160	16	200	16	320	16	320	16	230	16	200	16	170	16	300	0	16	300	13	350	0.34	0.91	0.35		0.34	0.30	0.37		0.25		2650	3025	3275
	8150	350	400	275	225	13	160	16	190	16	320	16	320	16	240	16	200	16	170	16	300	0	16	300	13	350	0.34	0.91	0.35		0.34	0.30	0.37		0.25		2650	3025	3325
	8625	375	425	275	225	13	160	16	180	16	330	16	330	16	240	16	190	16	180	16	300	0	16	300	13	350	0.34	0.90	0.35		0.39	0.30	0.42		0.30		2650	3075	3375
	9125	375	425	300	225	16	240	16	200	16	320	16	320	16	230	16	200	16	170	16	300	0	16	300	13	350	0.34	0.90	0.35		0.39	0.30	0.41		0.30		2663	3075	3375
	9600	400	450	300	225	16	230	16	190	16	310	16	310	16	220	16	190	16	160	16	300	0	16	300	13	350	0.34	0.90	0.35		0.39	0.31	0.41		0.30		2663	3125	3375

SPAN (S) = 2.4 m; HT (m) = 3 or 3.3

	DESIGN FILL	MEMBER THICKNESSES				TOP SLAB BARS								BOTTOM SLAB BARS						WALL BARS								COEFFICIENTS (see note)								"C" Multiplier	"K" Multiplier	
		TS	BS	TX	TI	A1	Bars	J3	Bars	H1	Bars	H2	Bars	A2	Bars	J4	Bars	H3	Bars	B1	Bars	B2	Bars		F	Bars	J4		H3		J3		H1		H2		S = 2.4 m	HT = 3.0 m	HT = 3.3 m
	(mm)	Thick	Thick.	Thick	Thick.	Size	c to c	Size	c to c	Size	c to c	Size	c to c	Size	c to c	Size	c to c	Size	c to c	Size	c to c	G1	Size	c to c	Size	c to c	C4	K3	C7		C1	K2	C5		C6		mm	mm	mm
MS18	250	250	250	225	225	16	180	13	160	16	330	16	330	16	230	19	190	19	220	16	300	300	16	200	13	350	0.59	0.94	0.51		0.44	0.21	0.83		0.38		2625	3375	3675
	800	200	250	225	225	16	220	16	220	16	330	16	330	13	180	16	200	16	160	16	300	300	16	300	13	350	0.52	0.96	0.48		0.45	0.21	0.83		0.30		2625	3325	3625
	1300	200	225	225	225	13	200	13	160	16	400	16	400	13	190	16	190	16	170	16	300	300	16	280	13	350	0.47	0.96	0.40		0.51	0.20	0.47		0.28		2625	3300	3600
	1800	200	250	225	225	13	210	16	240	16	410	16	410	13	210	16	220	16	210	16	300	300	16	300	13	350	0.45	0.96	0.38		0.46	0.21	0.42		0.27		2625	3325	3625
	2300	200	250	225	225	13	200	16	220	16	380	16	380	13	190	16	200	16	210	16	300	0	16	300	13	350	0.44	0.96	0.36		0.44	0.21	0.40		0.26		2625	3325	3625
MS18 MOD	200	300	275	225	225	16	180	13	160	19	430	19	430	16	220	19	180	19	220	16	300	300	16	190	13	350	0.60	0.93	0.51		0.44	0.22	0.85		0.45		2625	3450	3750
	750	250	275	225	225	16	200	16	210	19	410	19	410	16	240	16	180	19	190	16	300	300	16	300	13	350	0.52	0.95	0.50		0.45	0.23	0.85		0.33		2625	3350	3700
	1300	200	250	225	225	13	180	16	230	16	360	16	360	13	190	16	220	16	180	16	300	300	16	280	13	350	0.48	0.96	0.42		0.52	0.21	0.49		0.29		2625	3325	3625
	1800	200	250	225	225	13	190	16	220	16	370	16	370	13	190	16	220	16	190	16	300	300	16	300	13	350	0.45	0.96	0.39		0.46	0.21	0.43		0.28		2625	3325	3625
	2300	200	250	225	225	13	190	16	210	16	360	16	360	13	180	16	200	16	200	16	300	0	16	300	13	350	0.44	0.96	0.37		0.44	0.21	0.41		0.27		2625	3325	3625
MS18 or MS18 MOD	2800	200	275	225	225	13	180	16	190	16	340	16	340	13	180	16	190	16	230	16	300	0	16	300	13	350	0.44	0.96	0.36		0.42	0.23	0.39		0.26		2625	3350	3650
	3275	225	275	225	225	13	190	16	180	16	370	16	370	13	180	16	180	16	200	16	300	0	16	280	13	350	0.42	0.95	0.36		0.42	0.23	0.38		0.26		2625	3375	3675
	3775	225	300	250	225	13	180	16	200	16	340	16	340	13	170	16	190	16	180	16	300	0	16	290	13	350	0.42	0.95	0.36		0.41	0.23	0.38		0.26		2638	3375	3700
	4250	250	300	250	225	13	190	16	180	16	360	16	360	13	170	16	180	16	190	16	300	0	16	280	13	350	0.41	0.94	0.36		0.41	0.24	0.38		0.26		2638	3425	3725
	4750	250	325	250	225	13	180	16	170	16	330	16	330	13	180	16	170	16	210	16	300	0	16	260	13	350	0.41	0.94	0.35		0.41	0.24	0.38		0.26		2638	3450	3750
	5225	275	325	275	225	13	180	16	180	16	350	16	350	13	170	16	180	16	190	16	300	0	16	280	13	350	0.41	0.94	0.35		0.41	0.24	0.37		0.26		2650	3475	3775
	5725	275	325	275	225	13	180	16	180	16	350	16	350	13	170	16	170	16	190	16	300	0	16	260	13	350	0.40	0.94	0.35		0.40	0.24	0.37		0.26		2650	3475	3775
	6200	300	350	300	225	13	180	16	190	16	360	16	360	13	170	16	180	16	190	16	300	0	16	280	13	350	0.40	0.93	0.35		0.40	0.24	0.37		0.26		2663	3525	3825
	6700	300	350	300	225	13	170	16	180	16	330	16	330	13	160	16	170	16	180	16	300	0	16	300	13	350	0.40	0.93	0.35		0.40	0.24	0.37		0.25		2663	3525	3825
	7175	325	375	300	225	13	180	16	170	16	350	16	350	13	160	16	160	16	180	16	300	0	16	240	13	350	0.40	0.93	0.35		0.40	0.25	0.37		0.25		2663	3575	3875
	7675	325	375	325	225	13	160	16	180	16	320	16	320	16	230	16	170	16	170	16	300	0	16	260	13	350	0.40	0.93	0.34		0.40	0.25	0.37		0.25		2675	3575	3875
	8150	350	400	325	225	13	170	16	170	16	340	16	340	16	240	16	160	16	180	16	300	0	16	240	13	350	0.40	0.92	0.34		0.40	0.25	0.36		0.25		2675	3625	3925
	8650	350	400	325	225	13	160	16	160	16	320	16	320	16	230	16	160	16	170	16	300	0	16	240	13	350	0.40	0.92	0.34		0.40	0.25	0.36		0.25		2675	3625	3925
	9125	375	425	350	225	13	160	16	170	16	330	16	330	16	230	16	170	16	170	16	300	0	16	250	13	350	0.40	0.92	0.34		0.45	0.26	0.41		0.30		2688	3675	3975
	9625	375	425	350	225	16	240	16	160	16	310	16	310	16	220	16	160	16	160	16	300	0	16	240	13	350	0.40	0.92	0.34		0.45	0.26	0.41		0.30		2688	3675	3975

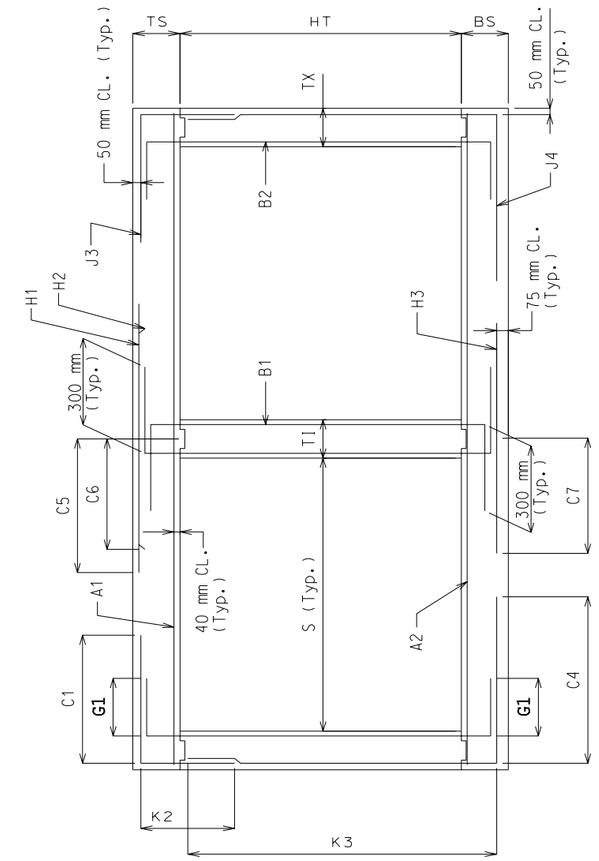

SECTION THRU BOX

NOTE: IF DESIGN FILL FALLS BETWEEN TABULATED FILLS, USE THE ADJACENT TABULATED FILL WHICH YIELDS THE GREATER MEMBER THICKNESS. IF THE MEMBER THICKNESSES ARE EQUAL, USE THE ADJACENT TABULATED FILL WHICH YIELDS THE GREATER AREA OF REINFORCEMENT.

SPECIAL DESIGNS ARE REQUIRED WHEN THE DESIGN FILL IS OUTSIDE THE RANGE OF TABULATED FILLS.

ALL DIMENSIONS ARE IN mm UNLESS OTHERWISE SPECIFIED.

COEFFICIENTS: DIMENSIONS MARKED WITH C# OR K# ARE THE PRODUCT OF THE COEFFICIENT AND ITS ASSOCIATED MULTIPLIER.

DESIGN FILL HEIGHT GIVEN IN THE TABLES IS THE HEIGHT FROM THE TOP OF THE EARTH FILL OR ROADWAY TO THE TOP OF THE TOP SLAB.

ALL CULVERTS MEET STRENGTH REQUIREMENTS FOR MILITARY 106 kN TANDEM AXLE LOADING.

MISSOURI HIGHWAY AND TRANSPORTATION COMMISSION

CONCRETE DOUBLE BOX CULVERT

MEMBER SIZES AND REINFORCEMENT

(MS18 & MS18 MOD LOADING)

DATE: | EFFECTIVE: 04-01-2002 | M703.45B | 5/13

Span (S) = 2.7 m; HT (m) = 1.8 or 2.1 or 2.4

Loading	DESIGN FILL (mm)	TS Thick	BS Thick.	TX Thick	TI Thick.	TOP SLAB BARS A1 Size	A1 Bars c to c	J3 Size	J3 Bars c to c	H1 Size	H1 Bars c to c	H2 Size	H2 Bars c to c	BOTTOM SLAB BARS A2 Size	A2 Bars c to c	J4 Size	J4 Bars c to c	H3 Size	H3 Bars c to c	WALL BARS B1 Size	B1 Bars c to c	B2 Bars G1	B2 Size	B2 c to c	F Size	F Bars c to c	COEFFICIENTS (see note) J4 C4	J4 K3	H3 C7	J3 C1	J3 K2	H1 C5	H2 C6	"C" Multiplier S = 2.7 m (mm)	"K" Multiplier HT = 1.8 m (mm)	HT = 2.1 m (mm)	HT = 2.4 m (mm)
MS18	250	250	250	200	200	16	160	13	160	19	420	19	420	16	220	19	180	19	190	16	300	300	16	160	13	350	0.43	0.92	0.49	0.43	0.32	0.84	0.38	2900	2175	2475	2775
MS18	775	225	250	200	200	16	200	16	230	19	380	19	380	16	240	16	190	19	180	16	300	300	16	300	13	350	0.34	0.93	0.47	0.43	0.31	0.65	0.32	2900	2150	2450	2750
MS18	1300	200	225	200	200	13	170	13	170	16	320	16	320	13	170	13	170	19	190	16	300	300	16	300	13	350	0.32	0.94	0.42	0.35	0.31	0.44	0.26	2900	2100	2400	2700
MS18	1800	200	250	200	200	13	170	13	170	16	320	16	320	13	180	13	180	16	170	16	300	300	16	300	13	350	0.30	0.94	0.37	0.32	0.30	0.41	0.25	2900	2125	2425	2725
MS18	2300	200	250	200	200	13	160	13	170	19	420	19	420	13	160	13	170	16	160	16	300	0	16	300	13	350	0.29	0.94	0.36	0.30	0.30	0.41	0.27	2900	2125	2425	2725
MS18 MOD	200	300	325	200	200	16	160	13	170	19	430	19	430	16	200	19	190	16	160	16	300	300	16	180	13	350	0.41	0.91	0.51	0.43	0.32	0.84	0.42	2900	2300	2600	2900
MS18 MOD	725	275	275	200	200	16	180	16	220	19	360	19	360	16	220	16	180	19	160	16	290	300	16	200	13	350	0.34	0.92	0.48	0.43	0.37	0.84	0.34	2900	2175	2525	2825
MS18 MOD	1300	200	250	200	200	16	230	13	160	19	400	19	400	13	170	13	160	19	210	16	300	300	16	300	13	350	0.32	0.94	0.43	0.36	0.30	0.48	0.29	2900	2125	2425	2725
MS18 MOD	1800	200	250	200	200	16	240	13	160	19	410	19	410	13	170	13	170	19	210	16	300	300	16	300	13	350	0.30	0.94	0.40	0.32	0.30	0.44	0.28	2900	2125	2425	2725
MS18 MOD	2275	225	275	200	200	13	170	13	170	19	470	19	470	13	170	13	180	16	170	16	300	0	16	300	13	350	0.29	0.93	0.37	0.30	0.31	0.42	0.27	2900	2175	2475	2775
MS18 or MS18 MOD	2775	225	275	200	200	13	160	13	160	19	430	19	430	13	160	13	170	16	160	16	300	0	16	300	13	350	0.28	0.93	0.35	0.29	0.31	0.40	0.26	2900	2175	2475	2775
MS18 or MS18 MOD	3250	250	300	200	200	13	170	13	160	16	320	16	320	13	160	13	170	16	170	16	300	0	16	300	13	350	0.28	0.93	0.35	0.28	0.31	0.37	0.24	2900	2225	2525	2825
MS18 or MS18 MOD	3750	250	300	200	200	16	240	16	220	19	410	19	410	16	230	13	160	16	160	16	300	0	16	300	13	350	0.27	0.93	0.35	0.28	0.31	0.39	0.27	2900	2225	2525	2825
MS18 or MS18 MOD	4225	275	325	200	200	13	160	16	220	19	430	19	430	16	240	16	230	16	160	16	300	0	16	300	13	350	0.27	0.92	0.35	0.28	0.32	0.39	0.27	2900	2275	2575	2875
MS18 or MS18 MOD	4700	300	350	200	200	13	160	16	200	16	310	16	310	13	160	16	220	16	170	16	300	0	16	300	13	350	0.27	0.91	0.35	0.27	0.32	0.37	0.24	2900	2325	2625	2925
MS18 or MS18 MOD	5200	300	350	200	200	16	230	16	190	19	400	19	400	16	220	16	210	19	220	16	300	0	16	300	13	350	0.27	0.91	0.37	0.27	0.33	0.39	0.27	2900	2325	2625	2925
MS18 or MS18 MOD	5675	325	375	225	200	16	230	16	220	19	420	19	420	16	230	16	240	16	160	16	300	0	16	300	13	350	0.27	0.90	0.35	0.28	0.33	0.39	0.27	2913	2375	2675	2975
MS18 or MS18 MOD	6175	325	375	225	200	16	230	16	210	19	410	19	410	16	220	16	220	19	220	16	300	0	16	300	13	350	0.27	0.90	0.37	0.27	0.33	0.39	0.27	2913	2375	2675	2975
MS18 or MS18 MOD	6650	350	400	225	200	16	230	16	200	19	410	19	410	16	220	16	220	16	160	16	300	0	16	300	13	350	0.27	0.90	0.35	0.27	0.33	0.39	0.27	2913	2425	2725	3025
MS18 or MS18 MOD	7125	375	400	250	200	16	220	16	220	19	390	19	390	16	210	16	230	19	200	16	300	0	16	300	13	350	0.27	0.90	0.37	0.28	0.34	0.43	0.31	2925	2450	2725	3025
MS18 or MS18 MOD	7625	375	425	250	200	16	220	16	210	19	400	19	400	16	210	16	230	19	210	16	300	0	16	300	13	350	0.27	0.89	0.37	0.32	0.34	0.43	0.31	2925	2475	2775	3075
MS18 or MS18 MOD	8100	400	450	250	200	16	220	16	200	19	410	19	410	16	210	16	220	19	210	16	300	0	16	300	13	350	0.27	0.88	0.37	0.32	0.34	0.43	0.30	2925	2525	2825	3125
MS18 or MS18 MOD	8600	400	450	250	200	16	210	16	190	19	380	19	380	16	200	16	210	19	200	16	300	0	16	300	13	350	0.27	0.88	0.37	0.32	0.34	0.43	0.30	2925	2525	2825	3125
MS18 or MS18 MOD	9075	425	475	275	200	16	210	16	220	19	390	19	390	16	200	16	230	19	210	16	300	0	16	300	13	350	0.27	0.88	0.37	0.32	0.34	0.42	0.30	2938	2575	2875	3175
MS18 or MS18 MOD	9550	450	475	275	200	16	200	16	200	19	380	19	380	16	190	16	220	19	190	16	300	0	16	300	13	350	0.27	0.88	0.37	0.32	0.35	0.42	0.30	2938	2600	2875	3175

SPAN (S) = 2.7 m; HT (m) = 2.7 or 3

Loading	DESIGN FILL (mm)	TS Thick	BS Thick.	TX Thick	TI Thick.	TOP SLAB BARS A1 Size	A1 Bars c to c	J3 Size	J3 Bars c to c	H1 Size	H1 Bars c to c	H2 Size	H2 Bars c to c	BOTTOM SLAB BARS A2 Size	A2 Bars c to c	J4 Size	J4 Bars c to c	H3 Size	H3 Bars c to c	WALL BARS B1 Size	B1 Bars c to c	B2 Bars G1	B2 Size	B2 c to c	F Size	F Bars c to c	COEFFICIENTS (see note) J4 C4	J4 K3	H3 C7	J3 C1	J3 K2	H1 C5	H2 C6	"C" Multiplier S = 2.7 m (mm)	"K" Multiplier HT = 2.7 m (mm)	HT = 3.0 m (mm)
MS18	250	250	250	225	225	16	160	16	240	19	420	19	420	16	220	19	190	19	190	16	300	300	16	180	13	350	0.48	0.94	0.49	0.44	0.24	0.84	0.37	2925	3075	3375
MS18	775	225	250	225	225	16	200	16	220	19	380	19	380	16	230	16	180	19	180	16	300	300	16	300	13	350	0.41	0.95	0.46	0.48	0.26	0.84	0.32	2925	3050	3350
MS18	1300	200	250	225	225	13	170	13	160	16	330	16	330	13	170	16	230	19	190	16	300	300	16	300	13	350	0.38	0.95	0.41	0.41	0.22	0.44	0.26	2925	3000	3325
MS18	1800	200	250	225	225	13	170	13	160	16	320	16	320	13	180	13	160	16	160	16	300	300	16	300	13	350	0.36	0.95	0.37	0.37	0.21	0.40	0.25	2925	3025	3325
MS18	2300	200	250	225	225	13	160	16	240	16	310	16	310	13	160	16	220	16	160	16	300	0	16	300	13	350	0.35	0.95	0.35	0.36	0.23	0.39	0.25	2925	3025	3325
MS18 MOD	200	300	275	225	225	16	160	16	240	19	400	19	400	16	210	19	180	19	190	16	300	300	16	170	13	350	0.49	0.93	0.49	0.44	0.25	0.84	0.42	2925	3150	3450
MS18 MOD	725	275	275	225	225	16	190	16	220	19	400	19	400	16	230	16	180	19	180	16	300	300	16	300	13	350	0.41	0.93	0.47	0.44	0.27	0.84	0.34	2925	3125	3425
MS18 MOD	1300	200	250	225	225	16	230	16	230	19	400	19	400	13	160	16	220	19	210	16	300	300	16	300	13	350	0.38	0.95	0.43	0.42	0.23	0.48	0.29	2925	3025	3325
MS18 MOD	1800	200	250	225	225	13	160	16	230	19	420	19	420	13	160	16	230	19	210	16	300	300	16	300	13	350	0.36	0.95	0.40	0.38	0.23	0.43	0.28	2925	3025	3325
MS18 MOD	2275	225	275	225	225	13	170	16	230	16	330	16	330	13	170	16	220	16	170	16	300	0	16	300	13	350	0.35	0.95	0.36	0.36	0.23	0.40	0.25	2925	3075	3375
MS18 or MS18 MOD	2775	225	275	225	225	13	160	16	220	16	310	16	310	16	240	16	220	16	170	16	300	0	16	300	13	350	0.34	0.95	0.35	0.35	0.23	0.37	0.24	2925	3075	3375
MS18 or MS18 MOD	3250	250	300	225	225	13	170	16	200	16	320	16	320	13	160	16	200	16	170	16	300	0	16	300	13	350	0.34	0.94	0.35	0.34	0.26	0.37	0.24	2925	3125	3425
MS18 or MS18 MOD	3750	250	300	225	225	13	160	16	180	19	420	19	420	16	230	16	190	16	160	16	300	0	16	300	13	350	0.33	0.94	0.35	0.33	0.26	0.39	0.26	2925	3125	3425
MS18 or MS18 MOD	4225	275	325	225	225	13	160	16	180	16	310	16	310	16	240	16	180	16	170	16	300	0	16	300	13	350	0.33	0.93	0.35	0.33	0.26	0.37	0.24	2925	3175	3475
MS18 or MS18 MOD	4700	300	350	250	225	13	160	16	190	16	320	16	320	13	160	16	190	16	170	16	300	0	16	300	13	350	0.33	0.93	0.35	0.33	0.27	0.37	0.24	2938	3225	3525
MS18 or MS18 MOD	5200	300	350	250	225	16	230	16	180	19	420	19	420	16	220	16	180	16	160	16	300	0	16	300	13	350	0.32	0.93	0.35	0.33	0.27	0.39	0.26	2938	3225	3525
MS18 or MS18 MOD	5675	325	375	250	225	16	240	16	170	19	430	19	430	16	230	16	170	16	160	16	300	0	16	300	13	350	0.32	0.92	0.35	0.33	0.27	0.39	0.27	2938	3275	3575
MS18 or MS18 MOD	6175	325	375	275	225	16	240	16	190	19	420	19	420	16	220	16	180	16	160	16	300	0	16	300	13	350	0.33	0.92	0.34	0.33	0.27	0.38	0.26	2950	3275	3575
MS18 or MS18 MOD	6650	350	400	275	225	13	160	16	180	19	430	19	430	16	230	16	180	16	160	16	300	0	16	300	13	350	0.32	0.92	0.34	0.33	0.27	0.38	0.26	2950	3325	3625
MS18 or MS18 MOD	7150	350	400	275	225	16	220	16	170	19	400	19	400	16	210	16	170	19	210	16	300	0	16	300	13	350	0.32	0.92	0.36	0.33	0.27	0.38	0.26	2950	3325	3625
MS18 or MS18 MOD	7625	375	425	300	225	16	230	16	180	19	420	19	420	16	210	16	180	19	220	16	300	0	16	300	13	350	0.33	0.91	0.36	0.37	0.28	0.42	0.30	2963	3375	3675
MS18 or MS18 MOD	8100	400	450	300	225	16	220	16	170	19	390	19	390	16	210	16	180	16	160	16	300	0	16	300	13	350	0.32	0.91	0.34	0.37	0.28	0.42	0.30	2963	3425	3700
MS18 or MS18 MOD	8600	400	450	300	225	16	220	16	160	19	400	19	400	16	200	16	170	19	210	16	300	0	16	280	13	350	0.32	0.90	0.36	0.37	0.28	0.42	0.30	2963	3425	3725
MS18 or MS18 MOD	9075	425	475	325	225	16	220	16	180	19	410	19	410	16	200	16	180	19	220	16	300	0	16	300	13	350	0.33	0.90	0.36	0.37	0.28	0.42	0.30	2975	3475	3775
MS18 or MS18 MOD	9575	425	475	325	225	16	210	16	170	19	390	19	390	16	190	16	170	19	200	16	300	0	16	290	13	350	0.33	0.90	0.36	0.37	0.28	0.42	0.30	2975	3475	3775

SPAN (S) = 2.7 m; HT (m) = 3.3 or 3.6

Loading	DESIGN FILL (mm)	TS Thick	BS Thick.	TX Thick	TI Thick.	TOP SLAB BARS A1 Size	A1 Bars c to c	J3 Size	J3 Bars c to c	H1 Size	H1 Bars c to c	H2 Size	H2 Bars c to c	BOTTOM SLAB BARS A2 Size	A2 Bars c to c	J4 Size	J4 Bars c to c	H3 Size	H3 Bars c to c	WALL BARS B1 Size	B1 Bars c to c	B2 Bars G1	B2 Size	B2 c to c	F Size	F Bars c to c	COEFFICIENTS (see note) J4 C4	J4 K3	H3 C7	J3 C1	J3 K2	H1 C5	H2 C6	"C" Multiplier S = 2.7 m (mm)	"K" Multiplier HT = 3.3 m (mm)	HT = 3.6 m (mm)
MS18	250	250	250	250	250	16	160	16	220	19	410	19	410	16	210	19	170	19	180	16	300	300	16	180	13	350	0.55	0.95	0.49	0.44	0.22	0.84	0.38	2950	3675	3975
MS18	775	225	250	250	250	16	200	16	200	19	380	19	380	16	220	19	220	19	180	16	300	300	16	300	13	350	0.50	0.95	0.46	0.44	0.22	0.84	0.32	2950	3650	3950
MS18	1300	200	250	250	250	13	170	16	200	16	320	16	320	13	170	16	180	16	160	16	300	300	16	250	13	350	0.45	0.96	0.40	0.48	0.21	0.44	0.27	2950	3625	3925
MS18	1800	200	250	250	250	13	170	16	190	16	320	16	320	13	170	16	180	16	160	16	300	300	16	300	13	350	0.43	0.96	0.37	0.43	0.21	0.41	0.26	2950	3625	3925
MS18	2300	200	275	250	250	13	160	16	180	19	430	19	430	13	170	16	190	16	200	16	300	0	16	300	13	350	0.42	0.96	0.35	0.41	0.21	0.41	0.27	2950	3650	3950
MS18 MOD	200	300	275	250	250	16	160	16	220	19	390	19	390	16	200	19	160	19	180	16	300	300	16	170	13	350	0.56	0.94	0.50	0.44	0.23	0.84	0.42	2950	3750	4050
MS18 MOD	725	275	275	250	250	16	190	16	190	19	390	19	390	16	220	16	160	19	170	16	300	300	16	300	13	350	0.49	0.94	0.47	0.44	0.23	0.84	0.34	2950	3725	4025
MS18 MOD	1300	200	250	250	250	16	220	16	180	19	400	19	400	16	240	16	170	19	200	16	300	300	16	250	13	350	0.45	0.96	0.43	0.49	0.21	0.48	0.29	2950	3625	3925
MS18 MOD	1800	200	275	250	250	16	240	16	180	19	410	19	410	13	160	16	190	19	210	16	300	300	16	300	13	350	0.43	0.96	0.40	0.44	0.21	0.43	0.28	2925	3625	3950
MS18 MOD	2275	225	275	250	250	13	170	16	200	16	330	16	330	13	160	16	190	16	170	16	300	0	16	300	13	350	0.42	0.95	0.36	0.42	0.21	0.40	0.25	2950	3675	3975
MS18 or MS18 MOD	2775	225	275	250	250	13	160	16	180	16	310	16	310	16	230	16	180	16	160	16	300	0	16	280	13	350	0.41	0.95	0.35	0.41	0.21	0.37	0.24	2950	3675	3975
MS18 or MS18 MOD	3250	250	300	250	250	13	170	16	170	16	320	16	320	13	160	16	170	16	170	16	300	0	16	260	13	350	0.40	0.95	0.35	0.40	0.22	0.37	0.25	2950	3725	4025
MS18 or MS18 MOD	3750	250	300	250	250	13	160	16	160	19	430	19	430	16	230	19	220	16	160	16	300	0	16	240	13	350	0.42	0.95	0.34	0.39	0.22	0.39	0.27	2950	3725	4025
MS18 or MS18 MOD	4225	275	325	275	250	13	170	16	170	16	310	16	310	16	230	16	160	16	170	16	300	0	16	260	13	350	0.39	0.94	0.34	0.39	0.22	0.37	0.24	2963	3775	4075
MS18 or MS18 MOD	4725	275	350	275	250	16	240	16	160	19	410	19	410	16	230	19	220	16	180	16	300	0	16	240	13	350	0.41	0.94	0.34	0.39	0.22	0.39	0.26	2963	3800	4100
MS18 or MS18 MOD	5200	300	350	300	250	13	160	16	170	19	430	19	430	16	220	16	160	16	160	16	300	0	16	260	13	350	0.39	0.94	0.34	0.39	0.23	0.38	0.26	2975	3825	4125
MS18 or MS18 MOD	5675	325	375	300	250	13	160	16	160	16	310	16	310	16	230	19	220	16	160	16	300	0	16	240	13	350	0.41	0.93	0.34	0.39	0.23	0.36	0.24	2975	3875	4175
MS18 or MS18 MOD	6175	325	375	300	250	13	160	19	220	16	310	16	310	16	220	19	210	16	160	16	300	0	16	230	13	350	0.40	0.93	0.33	0.40	0.24	0.36	0.24	2975	3875	4175
MS18 or MS18 MOD	6675	325	400	325	250	16	230	16	160	19	400	19	400	16	220	16	160	16	170	16	300	0	16	240	13	350	0.38	0.93	0.33	0.38	0.23	0.38	0.26	2988	3900	4200
MS18 or MS18 MOD	7150	350	400	325	250	16	230	19	220	19	420	19	420	16	210	19	210	19	220	16	300	0	16	230	13	350	0.40	0.93	0.36	0.40	0.24	0.38	0.26	2988	3925	4225
MS18 or MS18 MOD	7625	375	425	350	250	16	240	16	160	19	430	19	430	16	220	19	220	19	220	16	300	0	16	240	13	350	0.40	0.92	0.35	0.43	0.24	0.41	0.30	3000	3975	4275
MS18 or MS18 MOD	8125	375	450	350	250	16	220	19	210	19	400	19	400	16	210	19	210	16	160	16	300	0	16	230	13	350	0.40	0.92	0.33	0.44	0.24	0.42	0.30	3000	4000	4300
MS18 or MS18 MOD	8600	400	450	350	250	16	220	19	210	19	410	19	410	16	210	19	200	19	220	16	300	0	16	220	13	350	0.40	0.92	0.35	0.44	0.27	0.41	0.30	3000	4025	4325
MS18 or MS18 MOD	9100	400	475	375	250	16	210	19	210	19	390	19	390	16	200	19	220	16	160	16	300	0	16	220	13	350	0.40	0.92	0.32	0.45	0.25	0.41	0.30	3013	4050	4350
MS18 or MS18 MOD	9575	425	475	375	250	16	220	19	210	19	400	19	400	16	200	19	210	19	210	16	300	0	16	220	13	350	0.40	0.91	0.35	0.44	0.27	0.41	0.30	3013	4075	4375

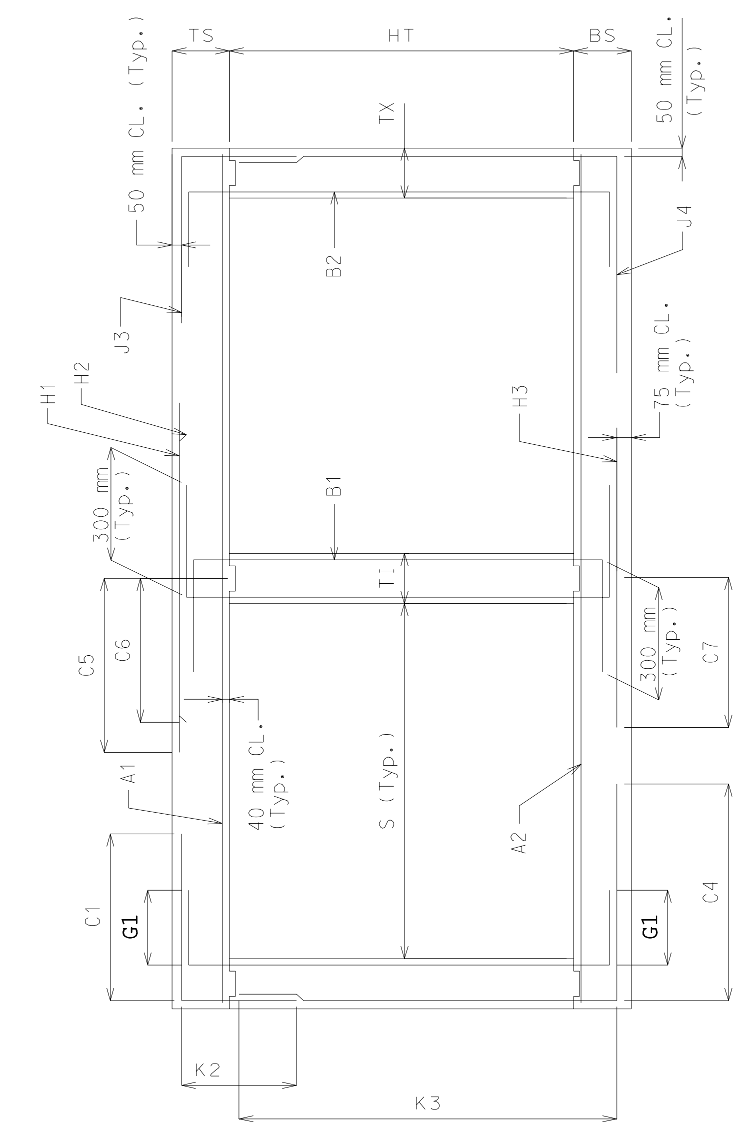

SECTION THRU BOX

NOTE: IF DESIGN FILL FALLS BETWEEN TABULATED FILLS, USE THE ADJACENT TABULATED FILL WHICH YIELDS THE GREATER MEMBER THICKNESS. IF THE MEMBER THICKNESSES ARE EQUAL, USE THE ADJACENT TABULATED FILL WHICH YIELDS THE GREATER AREA OF REINFORCEMENT.

SPECIAL DESIGNS ARE REQUIRED WHEN THE DESIGN FILL IS OUTSIDE THE RANGE OF TABULATED FILLS.

ALL DIMENSIONS ARE IN mm UNLESS OTHERWISE SPECIFIED.

COEFFICIENTS: DIMENSIONS MARKED WITH C# OR K# ARE THE PRODUCT OF THE COEFFICIENT AND ITS ASSOCIATED MULTIPLIER.

DESIGN FILL HEIGHT GIVEN IN THE TABLES IS THE HEIGHT FROM THE TOP OF THE EARTH FILL OR ROADWAY TO THE TOP OF THE TOP SLAB.

ALL CULVERTS MEET STRENGTH REQUIREMENTS FOR MILITARY 106 kN TANDEM AXLE LOADING.

MISSOURI HIGHWAY AND TRANSPORTATION COMMISSION

CONCRETE DOUBLE BOX CULVERT

MEMBER SIZES AND REINFORCEMENT

(MS18 & MS18 MOD LOADING)

DATE: | EFFECTIVE: 04-01-2002 | **M703.45B** | 6/13

Span (S) = 3 m; HT (m) = 2.1 or 2.4 or 2.7

	DESIGN FILL	MEMBER THICKNESSES				TOP SLAB BARS								BOTTOM SLAB BARS						WALL BARS							COEFFICIENTS (see note)							"C" Multiplier	"K" Multiplier		
		TS	BS	TX	TI	A1	Bars	J3	Bars	H1	Bars	H2	Bars	A2	Bars	J4	Bars	H3	Bars	B1	Bars	B2 Bars			F	Bars	J4		H3		J3		H1	H2	S = 3.0 m	HT = 2.1 m	HT = 2.4 m	HT = 2.7 m
	(mm)	Thick	Thick.	Thick	Thick.	Size	c to c	Size	c to c	Size	c to c	Size	c to c	Size	c to c	Size	c to c	Size	c to c	Size	c to c	G1	Size	c to c	Size	c to c	C4	K3	C7		C1	K2	C5	C6	mm	mm	mm	mm
MS18	225	275	300	225	225	16	170	13	160	16	310	16	310	16	220	19	190	19	220	16	300	300	16	190	13	350	0.42	0.93	0.50		0.42	0.28	0.80	0.34	3225	2550	2850	3150
MS18	750	250	250	225	225	16	180	16	210	19	360	19	360	16	220	16	160	22	210	16	300	300	16	300	13	350	0.34	0.93	0.48		0.43	0.33	0.65	0.31	3225	2475	2775	3075
MS18	1275	225	250	225	225	16	240	13	160	19	420	19	420	13	160	13	160	19	190	16	300	300	16	300	13	350	0.31	0.94	0.41		0.35	0.27	0.46	0.27	3225	2450	2750	3050
MS18	1775	225	250	225	225	13	160	13	160	19	410	19	410	16	230	13	160	19	180	16	300	300	16	300	13	350	0.30	0.94	0.39		0.32	0.27	0.42	0.26	3225	2450	2750	3050
MS18	2275	225	275	225	225	16	230	13	160	19	390	19	390	16	240	13	160	19	210	16	300	0	16	300	13	350	0.29	0.94	0.37		0.30	0.27	0.40	0.26	3225	2475	2775	3075
MS18 MOD	200	300	325	225	225	19	210	16	230	19	390	19	390	16	190	19	170	19	200	16	300	300	16	160	13	350	0.41	0.92	0.51		0.42	0.30	0.83	0.39	3225	2600	2900	3200
MS18 MOD	725	275	275	225	225	16	160	16	200	19	330	19	330	16	200	19	210	22	200	16	300	300	16	300	13	350	0.35	0.92	0.50		0.42	0.33	0.83	0.32	3225	2525	2825	3125
MS18 MOD	1275	225	250	225	225	16	210	16	220	19	360	19	360	16	220	16	220	19	160	16	300	300	16	300	13	350	0.32	0.94	0.41		0.36	0.32	0.48	0.28	3225	2450	2750	3050
MS18 MOD	1775	225	275	225	225	16	220	16	230	19	370	19	370	16	240	13	160	19	200	16	300	300	16	300	13	350	0.30	0.94	0.39		0.32	0.28	0.43	0.26	3225	2475	2775	3075
MS18 MOD	2275	225	275	225	225	16	220	16	230	19	370	19	370	16	220	16	240	19	190	16	300	0	16	300	13	350	0.29	0.94	0.38		0.31	0.28	0.41	0.26	3225	2475	2775	3075
MS18 or MS18 MOD	2750	250	300	225	225	16	230	16	230	19	390	19	390	16	220	13	160	19	210	16	300	0	16	300	13	350	0.28	0.93	0.36		0.29	0.29	0.38	0.25	3225	2525	2825	3125
MS18 or MS18 MOD	3225	275	325	225	225	16	230	16	220	19	400	19	400	16	230	13	160	19	220	16	300	0	16	300	13	350	0.27	0.93	0.36		0.28	0.29	0.38	0.25	3225	2575	2875	3175
MS18 or MS18 MOD	3725	275	325	225	225	16	210	16	200	19	370	19	370	16	200	16	220	19	200	16	300	0	16	300	13	350	0.27	0.93	0.36		0.28	0.29	0.38	0.25	3225	2575	2875	3175
MS18 or MS18 MOD	4200	300	350	225	225	16	220	16	200	19	380	19	380	16	210	16	210	19	200	16	300	0	16	300	13	350	0.27	0.92	0.36		0.27	0.29	0.38	0.25	3225	2625	2925	3225
MS18 or MS18 MOD	4675	325	375	225	225	16	220	16	190	19	390	19	390	16	210	16	200	19	210	16	300	0	16	300	13	350	0.27	0.91	0.36		0.27	0.30	0.38	0.25	3225	2675	2975	3275
MS18 or MS18 MOD	5175	325	375	225	225	16	200	16	180	19	360	19	360	16	200	16	190	19	190	16	300	0	16	300	13	350	0.26	0.91	0.36		0.27	0.33	0.38	0.25	3225	2675	2975	3275
MS18 or MS18 MOD	5650	350	400	225	225	16	200	16	170	19	360	19	360	16	200	16	180	19	190	16	300	0	16	300	13	350	0.26	0.91	0.36		0.26	0.33	0.38	0.25	3225	2725	3025	3325
MS18 or MS18 MOD	6125	375	425	250	225	16	210	16	190	19	370	19	370	16	200	16	200	19	200	16	300	0	16	300	13	350	0.26	0.90	0.36		0.31	0.34	0.41	0.29	3238	2775	3075	3375
MS18 or MS18 MOD	6625	375	425	250	225	16	200	16	180	19	360	19	360	16	200	16	190	19	190	16	300	0	16	300	13	350	0.26	0.90	0.36		0.31	0.34	0.41	0.29	3238	2775	3075	3375
MS18 or MS18 MOD	7100	400	450	250	225	16	200	16	180	19	360	19	360	16	200	16	190	19	190	16	300	0	16	300	13	350	0.26	0.90	0.36		0.30	0.31	0.41	0.29	3238	2825	3125	3425
MS18 or MS18 MOD	7575	425	450	275	225	16	190	16	180	19	340	19	340	16	180	16	190	19	180	16	300	0	16	300	13	350	0.26	0.90	0.36		0.31	0.31	0.41	0.29	3250	2850	3125	3425
MS18 or MS18 MOD	8075	425	475	275	225	16	190	16	180	19	350	19	350	16	190	16	190	19	180	16	300	0	16	300	13	350	0.26	0.89	0.36		0.31	0.34	0.41	0.29	3250	2875	3175	3475
MS18 or MS18 MOD	8550	450	500	275	225	16	190	16	180	19	350	19	350	16	190	16	190	19	190	16	300	0	16	300	13	350	0.26	0.88	0.36		0.31	0.35	0.41	0.29	3250	2925	3225	3525
MS18 or MS18 MOD	9025	475	500	300	225	16	180	16	180	19	340	19	340	16	180	16	200	19	170	16	300	0	16	300	13	350	0.27	0.88	0.36		0.31	0.35	0.40	0.28	3263	2950	3225	3525
MS18 or MS18 MOD	9525	475	525	300	225	16	180	16	180	19	340	19	340	16	180	16	190	19	180	16	300	0	16	300	13	350	0.27	0.88	0.35		0.31	0.35	0.40	0.28	3263	2975	3275	3575

SPAN (S) = 3 m; HT (m) = 3 or 3.3

	DESIGN FILL	MEMBER THICKNESSES				TOP SLAB BARS								BOTTOM SLAB BARS						WALL BARS							COEFFICIENTS (see note)							"C" Multiplier	"K" Multiplier	
		TS	BS	TX	TI	A1	Bars	J3	Bars	H1	Bars	H2	Bars	A2	Bars	J4	Bars	H3	Bars	B1	Bars	B2 Bars			F	Bars	J4		H3		J3		H1	H2	S = 3.0 m	HT = 3.0 m	HT = 3.3 m
	(mm)	Thick	Thick.	Thick	Thick.	Size	c to c	Size	c to c	Size	c to c	Size	c to c	Size	c to c	Size	c to c	Size	c to c	Size	c to c	G1	Size	c to c	Size	c to c	C4	K3	C7		C1	K2	C5	C6	mm	mm	mm
MS18	225	275	250	225	225	16	160	16	210	19	400	19	400	16	210	19	170	19	160	16	300	300	16	160	13	350	0.47	0.94	0.46		0.42	0.25	0.83	0.38	3225	3400	3700
MS18	750	250	275	225	225	16	180	16	190	19	360	19	360	16	210	19	220	22	210	16	300	300	16	300	13	350	0.43	0.94	0.47		0.51	0.24	0.83	0.31	3225	3375	3700
MS18	1275	225	250	225	225	16	230	16	210	19	410	19	410	16	230	16	190	19	180	16	300	300	16	300	13	350	0.37	0.95	0.40		0.41	0.23	0.46	0.28	3225	3350	3650
MS18	1775	225	275	225	225	13	160	16	200	19	410	19	410	13	160	16	190	19	210	16	300	300	16	300	13	350	0.36	0.95	0.38		0.37	0.23	0.42	0.26	3225	3375	3675
MS18	2275	225	275	225	225	16	230	16	190	19	400	19	400	16	220	16	180	19	210	16	300	0	16	300	13	350	0.34	0.95	0.37		0.35	0.23	0.40	0.26	3225	3375	3675
MS18 MOD	200	300	325	225	225	19	210	16	200	19	380	19	380	16	190	19	160	19	200	16	300	300	16	180	13	350	0.50	0.93	0.51		0.42	0.25	0.83	0.38	3225	3500	3800
MS18 MOD	725	275	275	225	225	19	220	16	170	19	320	19	320	16	190	19	190	22	200	16	300	300	16	300	13	350	0.43	0.94	0.49		0.42	0.24	0.83	0.32	3225	3425	3725
MS18 MOD	1275	225	275	225	225	16	200	16	190	19	370	19	370	16	220	16	180	19	160	16	300	300	16	300	13	350	0.38	0.95	0.42		0.41	0.23	0.48	0.28	3225	3350	3675
MS18 MOD	1775	225	275	225	225	16	220	16	190	19	380	19	380	16	220	16	180	19	200	16	300	300	16	300	13	350	0.36	0.95	0.39		0.38	0.23	0.43	0.27	3225	3375	3675
MS18 MOD	2275	225	300	225	225	16	220	16	180	19	370	19	370	16	220	16	180	19	190	16	300	0	16	300	13	350	0.34	0.95	0.37		0.35	0.23	0.41	0.26	3225	3375	3700
MS18 or MS18 MOD	2750	250	300	225	225	16	230	16	170	19	400	19	400	16	220	16	180	19	210	16	300	0	16	300	13	350	0.33	0.94	0.36		0.34	0.24	0.38	0.25	3225	3425	3725
MS18 or MS18 MOD	3225	275	325	225	225	16	240	16	160	19	410	19	410	16	220	16	160	19	220	16	300	0	16	300	13	350	0.33	0.94	0.36		0.33	0.24	0.38	0.25	3225	3475	3775
MS18 or MS18 MOD	3725	275	325	250	225	16	220	16	180	19	380	19	380	16	210	16	180	19	200	16	300	0	16	300	13	350	0.32	0.94	0.36		0.32	0.24	0.38	0.25	3238	3475	3775
MS18 or MS18 MOD	4200	300	350	250	225	16	220	16	160	19	390	19	390	16	210	16	160	19	210	16	300	0	16	300	13	350	0.32	0.93	0.36		0.32	0.24	0.38	0.25	3238	3525	3825
MS18 or MS18 MOD	4675	325	375	250	225	16	230	16	160	19	400	19	400	16	210	16	160	19	210	16	300	0	16	290	13	350	0.32	0.93	0.36		0.32	0.25	0.38	0.25	3238	3575	3875
MS18 or MS18 MOD	5175	325	375	275	225	16	210	16	160	19	370	19	370	16	200	16	160	19	190	16	300	0	16	300	13	350	0.32	0.93	0.35		0.32	0.25	0.38	0.25	3250	3575	3875
MS18 or MS18 MOD	5650	350	400	275	225	16	210	16	160	19	380	19	380	16	200	16	160	19	200	16	300	0	16	290	13	350	0.31	0.92	0.35		0.32	0.25	0.37	0.25	3250	3625	3925
MS18 or MS18 MOD	6125	375	425	300	225	16	210	16	170	19	380	19	380	16	200	16	170	19	200	16	300	0	16	300	13	350	0.32	0.92	0.35		0.36	0.26	0.41	0.29	3263	3675	3975
MS18 or MS18 MOD	6625	375	425	300	225	16	210	16	160	19	370	19	370	16	200	16	160	19	200	16	300	0	16	290	13	350	0.31	0.92	0.35		0.36	0.26	0.41	0.29	3263	3675	3975
MS18 or MS18 MOD	7100	400	450	300	225	16	210	19	220	19	380	19	380	16	200	19	220	19	200	16	300	0	16	270	13	350	0.33	0.91	0.35		0.37	0.27	0.40	0.29	3263	3725	4025
MS18 or MS18 MOD	7600	400	450	325	225	16	200	16	160	19	360	19	360	16	190	16	160	19	190	16	300	0	16	290	13	350	0.31	0.91	0.35		0.36	0.26	0.40	0.28	3275	3725	4025
MS18 or MS18 MOD	8075	425	475	325	225	16	200	19	220	19	360	19	360	16	190	16	160	19	190	16	300	0	16	270	13	350	0.31	0.91	0.35		0.37	0.27	0.40	0.28	3275	3775	4075
MS18 or MS18 MOD	8550	450	500	325	225	16	200	19	220	19	370	19	370	16	190	19	220	19	190	16	300	0	16	250	13	350	0.33	0.90	0.35		0.37	0.27	0.40	0.28	3275	3825	4125
MS18 or MS18 MOD	9050	450	500	350	225	16	190	16	160	19	350	19	350	16	180	16	160	19	180	16	300	0	16	280	13	350	0.32	0.90	0.34		0.36	0.27	0.40	0.28	3288	3825	4125
MS18 or MS18 MOD	9525	475	525	350	225	16	190	19	220	19	360	19	360	16	180	19	220	19	190	16	300	0	16	260	13	350	0.34	0.90	0.34		0.37	0.28	0.40	0.28	3288	3875	4175

SPAN (S) = 3 m; HT (m) = 3.6 or 3.9

	DESIGN FILL	MEMBER THICKNESSES				TOP SLAB BARS								BOTTOM SLAB BARS						WALL BARS							COEFFICIENTS (see note)							"C" Multiplier	"K" Multiplier	
		TS	BS	TX	TI	A1	Bars	J3	Bars	H1	Bars	H2	Bars	A2	Bars	J4	Bars	H3	Bars	B1	Bars	B2 Bars			F	Bars	J4		H3		J3		H1	H2	S = 3.0 m	HT = 3.6 m	HT = 3.9 m
	(mm)	Thick	Thick.	Thick	Thick.	Size	c to c	Size	c to c	Size	c to c	Size	c to c	Size	c to c	Size	c to c	Size	c to c	Size	c to c	G1	Size	c to c	Size	c to c	C4	K3	C7		C1	K2	C5	C6	mm	mm	mm
MS18	225	275	275	250	250	16	160	16	190	19	410	19	410	16	210	19	160	19	160	16	300	300	16	170	13	350	0.55	0.95	0.47		0.43	0.21	0.82	0.36	3250	4000	4325
MS18	750	250	275	250	250	16	180	16	180	19	360	19	360	16	200	19	190	22	200	16	300	300	16	300	13	350	0.50	0.95	0.46		0.43	0.20	0.82	0.31	3250	3975	4300
MS18	1275	225	250	250	250	16	230	16	180	19	420	19	420	16	220	19	210	19	180	16	300	300	16	250	13	350	0.45	0.96	0.40		0.48	0.20	0.46	0.28	3250	3950	4250
MS18	1775	225	275	250	250	16	240	16	180	19	420	19	420	16	230	19	230	19	210	16	300	300	16	230	13	350	0.44	0.96	0.38		0.43	0.20	0.42	0.27	3250	3975	4275
MS18	2275	225	275	250	250	16	230	16	160	19	400	19	400	16	220	19	220	19	200	16	300	0	16	250	13	350	0.42	0.96	0.37		0.41	0.20	0.40	0.26	3250	3975	4275
MS18 MOD	200	300	275	250	250	19	210	16	180	19	360	19	360	16	190	22	200	19	160	16	300	300	16	160	13	350	0.58	0.94	0.47		0.43	0.21	0.82	0.39	3250	4050	4350
MS18 MOD	725	275	275	250	250	16	160	16	160	19	330	19	330	16	190	19	180	22	200	16	300	300	16	300	13	350	0.50	0.95	0.48		0.43	0.21	0.82	0.32	3250	4025	4325
MS18 MOD	1275	225	275	250	250	16	210	16	170	19	370	19	370	16	220	16	160	19	190	16	300	300	16	250	13	350	0.44	0.96	0.41		0.49	0.20	0.48	0.28	3250	3975	4275
MS18 MOD	1775	225	275	250	250	16	220	16	170	19	380	19	380	16	220	16	160	19	190	16	300	300	16	270	13	350	0.42	0.96	0.39		0.43	0.20	0.43	0.27	3250	3975	4275
MS18 MOD	2275	225	300	250	250	16	220	16	160	19	380	19	380	16	230	19	220	16	160	16	300	0	16	250	13	350	0.43	0.96	0.35		0.41	0.20	0.41	0.26	3250	4000	4300
MS18 or MS18 MOD	2750	250	300	250	250	16	230	19	220	19	410	19	410	16	210	19	210	19	210	16	300	0	16	240	13	350	0.42	0.95	0.36		0.42	0.21	0.38	0.25	3250	4025	4325
MS18 or MS18 MOD	3250	250	325	275	250	16	220	16	160	19	370	19	370	16	210	16	160	16	160	16	300	0	16	250	13	350	0.39	0.95	0.33		0.39	0.20	0.38	0.25	3263	4050	4350
MS18 or MS18 MOD	3725	275	350	275	250	16	220	19	210	19	380	19	380	16	200	19	210	19	200	16	300	0	16	240	13	350	0.40	0.95	0.35		0.40	0.23	0.38	0.25	3263	4075	4400
MS18 or MS18 MOD	4200	300	350	300	250	16	230	16	160	19	400	19	400	16	210	19	220	19	210	16	300	0	16	240	13	350	0.40	0.94	0.35		0.38	0.21	0.38	0.25	3275	4125	4425
MS18 or MS18 MOD	4700	300	375	300	250	16	210	19	210	19	370	19	370	16	210	19	210	19	220	16	300	0	16	230	13	350	0.40	0.94	0.35		0.39	0.24	0.38	0.25	3263	4150	4450
MS18 or MS18 MOD	5175	325	375	300	250	16	220	19	200	19	380	19	380	16	200	19	190	19	200	16	300	0	16	220	13	350	0.39	0.94	0.35		0.39	0.22	0.37	0.25	3275	4175	4475
MS18 or MS18 MOD	5650	350	400	325	250	16	220	19	210	19	390	19	390	16	200	19	200	19	200	16	300	0	16	230	13	350	0.39	0.93	0.35		0.39	0.24	0.37	0.25	3288	4225	4525
MS18 or MS18 MOD	6150	350	425	325	250	16	210	19	190	19	360	19	360	16	200	19	190	19	210	16	300	0	16	220	13	350	0.39	0.93	0.34		0.39	0.24	0.37	0.25	3288	4250	4550
MS18 or MS18 MOD	6625	375	425	350	250	16	220	19	210	19	390	19	390	16	200	19	200	19	200	16	300	0	16	220	13	350	0.39	0.93	0.34		0.42	0.25	0.40	0.28	3300	4275	4575
MS18 or MS18 MOD	7125	375	450	350	250	16	210	19	200	19	360	19	360	16	190	19	190	19	210	16	300	0	16	210	13	350	0.39	0.93	0.34		0.42	0.24	0.40	0.28	3300	4300	4600
MS18 or MS18 MOD	7600	400	475	375	250	16	210	19	210	19	370	19	370	16	190	19	210	19	190	16	300	0	16	220	13	350	0.39	0.92	0.34		0.42	0.25	0.40	0.28	3313	4325	4650
MS18 or MS18 MOD	8075	425	475	375	250	16	210	19	200	19	370	19	370	16	190	19	190	19	190	16	300	0	16	210	13	350	0.39	0.92	0.34		0.42	0.25	0.40	0.28	3313	4375	4675
MS18 or MS18 MOD	8575	425	500	400	250	16	200	19	200	19	350	19	350	16	180	19	200	19	200	16	300	0	16	220	13	350	0.39	0.92	0.34		0.42	0.25	0.40	0.28	3325	4400	4700
MS18 or MS18 MOD	9050	450	500	400	250	16	200	19	200	19	360	19	360	16	180	19	190	19	190	16	300	0	16	210	13	350	0.38	0.92	0.34		0.42	0.25	0.39	0.28	3325	4425	4725
MS18 or MS18 MOD	9525	475	525	400	250	16	200	19	190	19	370	19	370	16	180	19	180	19	190	16	300	0	16	200	13	350	0.39	0.91	0.34		0.42	0.26	0.39	0.28	3325	4475	4775

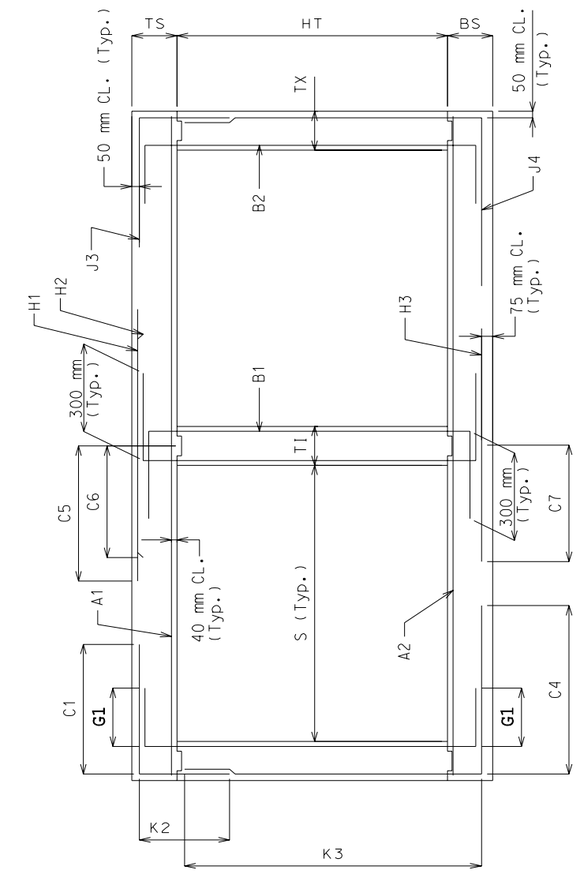

SECTION THRU BOX

NOTE: IF DESIGN FILL FALLS BETWEEN TABULATED FILLS, USE THE ADJACENT TABULATED FILL WHICH YIELDS THE GREATER MEMBER THICKNESS. IF THE MEMBER THICKNESSES ARE EQUAL, USE THE ADJACENT TABULATED FILL WHICH YIELDS THE GREATER AREA OF REINFORCEMENT.

SPECIAL DESIGNS ARE REQUIRED WHEN THE DESIGN FILL IS OUTSIDE THE RANGE OF TABULATED FILLS.

ALL DIMENSIONS ARE IN mm UNLESS OTHERWISE SPECIFIED.

COEFFICIENTS: DIMENSIONS MARKED WITH C# OR K# ARE THE PRODUCT OF THE COEFFICIENT AND ITS ASSOCIATED MULTIPLIER.

DESIGN FILL HEIGHT GIVEN IN THE TABLES IS THE HEIGHT FROM THE TOP OF THE EARTH FILL OR ROADWAY TO THE TOP OF THE TOP SLAB.

ALL CULVERTS MEET STRENGTH REQUIREMENTS FOR MILITARY 106 kN TANDEM AXLE LOADING.

MISSOURI HIGHWAY AND TRANSPORTATION COMMISSION

CONCRETE DOUBLE BOX CULVERT

MEMBER SIZES AND REINFORCEMENT

(MS18 & MS18 MOD LOADING)

DATE:	EFFECTIVE: 04-01-2002	M703.45B	7/13

SPAN (S) = 3.3 m; HT (m) = 2.4 or 2.7 or 3

Load	DESIGN FILL (mm)	TS Thick	BS Thick.	TX Thick	TI Thick.	A1 Size	A1 Bars c to c	J3 Size	J3 Bars c to c	H1 Size	H1 Bars c to c	H2 Size	H2 Bars c to c	A2 Size	A2 Bars c to c	J4 Size	J4 Bars c to c	H3 Size	H3 Bars c to c	B1 Size	B1 Bars c to c	G1	B2 Size	B2 Bars c to c	F Size	F Bars c to c	C4 (J4)	K3 (J4)	C7 (H3)	C1 (J3)	K2 (J3)	C5 (H1)	C6 (H2)	"C" Multiplier S = 3.3 m (mm)	"K" Multiplier HT = 2.4 m (mm)	"K" Multiplier HT = 2.7 m (mm)	"K" Multiplier HT = 3.0 m (mm)
MS18	225	275	300	225	225	19	220	16	210	19	390	19	390	16	210	19	170	19	190	16	300	300	16	180	13	350	0.41	0.93	0.48	0.41	0.29	0.81	0.34	3525	2850	3150	3450
	750	250	275	225	225	19	210	16	180	19	310	19	310	16	190	19	210	22	180	16	300	300	16	280	13	350	0.35	0.94	0.47	0.45	0.29	0.61	0.30	3525	2775	3075	3400
	1250	250	250	225	225	16	210	16	220	19	400	19	400	16	210	16	190	22	210	16	300	300	16	300	13	350	0.31	0.94	0.42	0.35	0.26	0.45	0.27	3525	2775	3075	3375
	1750	250	275	225	225	16	210	16	210	19	390	19	390	16	210	16	200	22	230	16	300	300	16	300	13	350	0.30	0.94	0.41	0.31	0.29	0.41	0.25	3525	2800	3100	3400
	2250	250	300	225	225	16	210	16	200	19	370	19	370	16	210	16	200	19	190	16	300	0	16	300	13	350	0.29	0.94	0.37	0.30	0.29	0.40	0.25	3525	2825	3125	3425
MS18 MOD	200	300	325	225	225	19	200	16	200	19	350	19	350	16	180	22	200	19	180	16	300	300	19	210	13	350	0.44	0.93	0.50	0.41	0.30	0.81	0.37	3525	2900	3200	3500
	700	300	275	225	225	19	200	16	180	19	310	19	310	16	180	19	190	22	170	16	300	300	16	300	13	350	0.35	0.93	0.48	0.41	0.30	0.81	0.31	3525	2850	3150	3450
	1250	250	275	225	225	16	190	16	190	19	350	19	350	16	210	16	180	19	160	16	300	300	16	300	13	350	0.31	0.94	0.41	0.36	0.29	0.48	0.27	3525	2800	3100	3400
	1750	250	275	225	225	16	200	16	190	19	350	19	350	16	200	16	190	19	160	16	300	300	16	300	13	350	0.30	0.94	0.39	0.31	0.29	0.42	0.26	3525	2800	3100	3400
	2250	250	300	225	225	16	200	16	190	19	350	19	350	16	200	16	190	19	180	16	300	0	16	300	13	350	0.29	0.94	0.37	0.30	0.29	0.40	0.25	3525	2825	3125	3425
MS18 or MS18 MOD	2725	275	325	225	225	16	210	16	190	19	370	19	370	16	210	16	200	19	190	16	300	0	16	300	13	350	0.28	0.93	0.36	0.28	0.29	0.38	0.24	3525	2875	3175	3475
	3225	275	350	225	225	16	190	16	180	19	330	19	330	16	190	16	190	19	180	16	300	0	16	300	13	350	0.27	0.93	0.35	0.28	0.29	0.37	0.24	3525	2875	3175	3500
	3700	300	350	225	225	16	200	16	170	19	330	19	330	16	190	16	180	19	180	16	300	0	16	300	13	350	0.27	0.93	0.35	0.27	0.29	0.37	0.24	3525	2925	3225	3525
	4175	325	375	225	225	16	200	16	160	19	340	19	340	16	190	16	170	19	180	16	300	0	16	300	13	350	0.26	0.92	0.35	0.26	0.30	0.37	0.24	3525	2975	3275	3575
	4650	350	400	250	225	16	200	16	180	19	350	19	350	16	190	16	180	19	180	16	300	0	16	300	13	350	0.26	0.92	0.35	0.27	0.30	0.37	0.24	3538	3025	3325	3625
	5125	375	425	250	225	16	180	16	160	19	320	19	320	16	180	16	180	19	170	16	300	0	16	300	13	350	0.26	0.92	0.36	0.27	0.31	0.40	0.27	3538	3050	3325	3650
	5625	375	425	250	225	16	180	16	160	19	320	19	320	16	180	16	160	19	170	16	300	0	16	300	13	350	0.26	0.91	0.35	0.30	0.30	0.40	0.27	3538	3075	3375	3675
	6100	400	450	275	225	16	180	16	170	19	330	19	330	16	180	16	180	19	170	16	300	0	16	300	13	350	0.26	0.90	0.35	0.30	0.31	0.40	0.27	3550	3125	3425	3725
	6575	425	475	275	225	16	180	16	170	19	330	19	330	16	180	16	180	19	170	16	300	0	16	300	13	350	0.26	0.90	0.35	0.30	0.31	0.40	0.27	3550	3175	3475	3775
	7075	425	475	275	225	16	180	16	160	19	320	19	320	16	170	16	160	19	160	16	300	0	16	300	13	350	0.26	0.90	0.35	0.30	0.31	0.40	0.27	3550	3175	3475	3775
	7550	450	500	300	225	16	180	16	170	19	320	19	320	16	170	16	180	19	170	16	300	0	16	300	13	350	0.26	0.89	0.35	0.30	0.31	0.39	0.27	3563	3225	3525	3825
	8025	475	525	300	225	16	180	16	160	19	310	19	310	16	170	16	180	19	170	16	300	0	16	300	13	350	0.26	0.89	0.34	0.30	0.32	0.39	0.27	3563	3275	3575	3850
	8525	475	525	300	225	16	170	16	160	19	310	19	310	16	160	16	160	19	160	16	300	0	16	300	13	350	0.26	0.89	0.34	0.30	0.32	0.39	0.27	3563	3275	3575	3875
	9000	500	550	325	225	16	170	16	170	19	310	19	310	16	160	16	180	19	160	16	300	0	16	300	13	350	0.26	0.88	0.34	0.30	0.32	0.39	0.27	3575	3325	3625	3925
	9475	525	575	325	225	16	170	16	160	19	320	19	320	16	160	16	170	19	160	16	300	0	16	290	13	350	0.26	0.88	0.34	0.30	0.32	0.39	0.27	3575	3375	3675	3975

SPAN (S) = 3.3 m; HT (m) = 3.3 or 3.6

Load	DESIGN FILL (mm)	TS Thick	BS Thick.	TX Thick	TI Thick.	A1 Size	A1 Bars c to c	J3 Size	J3 Bars c to c	H1 Size	H1 Bars c to c	H2 Size	H2 Bars c to c	A2 Size	A2 Bars c to c	J4 Size	J4 Bars c to c	H3 Size	H3 Bars c to c	B1 Size	B1 Bars c to c	G1	B2 Size	B2 Bars c to c	F Size	F Bars c to c	C4 (J4)	K3 (J4)	C7 (H3)	C1 (J3)	K2 (J3)	C5 (H1)	C6 (H2)	"C" Multiplier S = 3.3 m (mm)	"K" Multiplier HT = 3.3 m (mm)	"K" Multiplier HT = 3.6 m (mm)
MS18	225	275	300	250	250	19	210	16	190	19	390	19	390	16	200	19	160	19	190	16	300	300	16	190	13	350	0.48	0.94	0.48	0.42	0.22	0.81	0.34	3550	3750	4050
	750	250	275	250	250	19	210	16	170	19	310	19	310	16	190	19	190	22	200	16	300	300	16	300	13	350	0.41	0.95	0.47	0.42	0.22	0.81	0.29	3550	3700	4000
	1250	250	275	250	250	16	210	16	190	19	390	19	390	16	200	16	170	22	200	16	300	300	16	300	13	350	0.37	0.95	0.42	0.40	0.22	0.46	0.27	3550	3675	4000
	1750	250	275	250	250	16	220	16	190	19	390	19	390	16	210	16	180	22	230	16	300	300	16	300	13	350	0.35	0.95	0.41	0.37	0.22	0.41	0.26	3550	3700	4000
	2250	250	300	250	250	16	210	16	180	19	370	19	370	16	210	16	170	19	190	16	300	0	16	300	13	350	0.34	0.95	0.36	0.35	0.22	0.40	0.25	3550	3725	4025
MS18 MOD	200	300	325	250	250	19	190	16	180	19	350	19	350	16	180	22	200	19	170	16	300	300	16	160	13	350	0.51	0.94	0.50	0.42	0.23	0.81	0.36	3550	3800	4100
	700	300	300	250	250	19	210	16	170	19	310	19	310	16	180	19	180	22	190	16	300	300	16	300	13	350	0.42	0.94	0.48	0.42	0.23	0.81	0.31	3550	3775	4075
	1250	250	275	250	250	16	190	16	180	19	340	19	340	16	200	16	160	22	210	16	300	300	16	300	13	350	0.37	0.95	0.43	0.41	0.22	0.48	0.27	3550	3700	4000
	1750	250	300	250	250	16	200	16	180	19	350	19	350	16	210	16	170	19	180	16	300	300	16	300	13	350	0.35	0.95	0.39	0.37	0.22	0.43	0.26	3550	3725	4025
	2250	250	300	250	250	16	200	16	170	19	340	19	340	16	200	16	160	19	180	16	300	0	16	300	13	350	0.34	0.95	0.37	0.35	0.22	0.40	0.25	3550	3725	4025
MS18 or MS18 MOD	2725	275	325	250	250	16	210	16	160	19	370	19	370	16	200	16	160	19	190	16	300	0	16	300	13	350	0.33	0.94	0.36	0.33	0.22	0.38	0.24	3550	3775	4075
	3225	275	350	250	250	16	200	19	210	19	330	19	330	16	200	19	220	19	200	16	300	0	16	300	13	350	0.34	0.94	0.35	0.34	0.25	0.37	0.24	3550	3800	4100
	3700	300	350	250	250	16	200	19	210	19	340	19	340	16	190	19	200	19	180	16	300	0	16	280	13	350	0.33	0.94	0.35	0.33	0.24	0.37	0.24	3550	3825	4125
	4175	325	375	275	250	16	200	19	220	19	350	19	350	16	190	19	220	19	180	16	300	0	16	290	13	350	0.33	0.93	0.35	0.33	0.24	0.37	0.24	3563	3875	4175
	4650	350	400	275	250	16	190	19	210	19	330	19	330	16	190	19	210	19	190	16	300	0	16	270	13	350	0.33	0.93	0.35	0.33	0.26	0.37	0.24	3563	3925	4200
	5150	350	425	300	250	16	190	19	220	19	330	19	330	16	190	19	220	19	190	16	300	0	16	290	13	350	0.33	0.93	0.34	0.33	0.24	0.37	0.24	3575	3950	4250
	5625	375	425	300	250	16	190	19	210	19	330	19	330	16	180	19	210	19	170	16	300	0	16	270	13	350	0.32	0.92	0.34	0.36	0.26	0.40	0.27	3575	3975	4275
	6100	400	450	300	250	16	190	19	200	19	340	19	340	16	180	19	200	19	170	16	300	0	16	250	13	350	0.32	0.92	0.34	0.36	0.25	0.40	0.27	3575	4025	4325
	6575	425	475	325	250	16	180	19	210	19	320	19	320	16	170	19	210	19	180	16	300	0	16	270	13	350	0.32	0.92	0.34	0.36	0.25	0.39	0.27	3588	4075	4350
	7075	425	500	325	250	16	180	19	200	19	320	19	320	16	170	19	210	19	180	16	300	0	16	240	13	350	0.32	0.91	0.34	0.36	0.27	0.39	0.27	3588	4100	4400
	7550	450	500	350	250	16	190	19	210	19	340	19	340	16	170	19	210	19	170	16	300	0	16	260	13	350	0.32	0.91	0.34	0.36	0.25	0.39	0.27	3600	4125	4425
	8050	450	525	350	250	16	180	19	200	19	310	19	310	16	170	19	210	19	180	16	300	0	16	240	13	350	0.32	0.91	0.33	0.36	0.27	0.39	0.27	3600	4150	4450
	8525	475	525	350	250	16	180	19	190	19	320	19	320	16	160	19	190	19	160	16	300	0	16	230	13	350	0.32	0.90	0.34	0.36	0.28	0.39	0.27	3600	4175	4475
	9000	500	550	375	250	16	180	19	210	19	320	19	320	16	160	19	210	19	170	16	300	0	16	240	13	350	0.32	0.90	0.33	0.36	0.28	0.38	0.27	3613	4225	4525
	9500	500	575	375	250	16	170	19	190	19	310	19	310	16	160	19	200	19	170	16	300	0	16	230	13	350	0.32	0.90	0.33	0.36	0.28	0.38	0.27	3613	4250	4550

SPAN (S) = 3.3 m; HT (m) = 3.9 or 4.2

Load	DESIGN FILL (mm)	TS Thick	BS Thick.	TX Thick	TI Thick.	A1 Size	A1 Bars c to c	J3 Size	J3 Bars c to c	H1 Size	H1 Bars c to c	H2 Size	H2 Bars c to c	A2 Size	A2 Bars c to c	J4 Size	J4 Bars c to c	H3 Size	H3 Bars c to c	B1 Size	B1 Bars c to c	G1	B2 Size	B2 Bars c to c	F Size	F Bars c to c	C4 (J4)	K3 (J4)	C7 (H3)	C1 (J3)	K2 (J3)	C5 (H1)	C6 (H2)	"C" Multiplier S = 3.3 m (mm)	"K" Multiplier HT = 3.9 m (mm)	"K" Multiplier HT = 4.2 m (mm)
MS18	200	300	300	275	275	16	160	16	190	19	410	19	410	16	210	19	160	19	180	16	300	300	16	200	13	350	0.53	0.95	0.46	0.42	0.20	0.81	0.35	3575	4375	4675
	750	250	275	275	275	19	220	16	160	19	320	19	320	16	190	19	170	22	200	16	300	300	16	290	13	350	0.47	0.96	0.46	0.42	0.19	0.81	0.29	3575	4300	4600
	1250	250	275	275	275	16	220	16	180	19	390	19	390	16	210	19	190	19	170	16	300	300	16	270	13	350	0.44	0.96	0.42	0.47	0.19	0.46	0.27	3575	4300	4600
	1750	250	275	275	275	16	220	16	170	19	390	19	390	16	200	19	190	22	230	16	300	300	16	250	13	350	0.42	0.96	0.40	0.42	0.19	0.41	0.26	3575	4300	4600
	2250	250	300	275	275	16	220	16	160	19	370	19	370	16	200	19	210	19	190	16	300	0	16	240	13	350	0.41	0.96	0.36	0.40	0.19	0.40	0.25	3575	4325	4625
MS18 MOD	150	350	325	275	275	19	190	16	170	19	350	19	350	16	180	22	190	19	170	16	300	300	16	170	13	350	0.55	0.94	0.49	0.42	0.20	0.81	0.38	3575	4400	4750
	700	300	300	275	275	19	210	19	220	19	310	19	310	16	180	19	170	22	190	16	300	300	16	300	13	350	0.48	0.95	0.47	0.44	0.22	0.81	0.31	3575	4375	4675
	1250	250	275	275	275	16	190	16	160	19	340	19	340	16	190	19	190	19	160	16	300	300	16	270	13	350	0.44	0.96	0.40	0.48	0.19	0.48	0.27	3575	4300	4600
	1750	250	300	275	275	16	200	16	160	19	350	19	350	16	200	19	210	19	180	16	300	300	16	250	13	350	0.42	0.96	0.38	0.43	0.19	0.42	0.26	3575	4325	4625
	2250	250	300	275	275	16	200	19	220	19	350	19	350	16	190	19	210	19	170	16	300	0	16	240	13	350	0.41	0.96	0.37	0.42	0.21	0.40	0.25	3575	4325	4625
MS18 or MS18 MOD	2725	275	325	275	275	16	210	19	210	19	370	19	370	16	190	19	200	19	190	16	300	0	16	230	13	350	0.40	0.95	0.35	0.40	0.22	0.38	0.24	3575	4375	4675
	3225	275	350	275	275	16	200	19	190	19	340	19	340	16	190	19	180	19	200	16	300	0	16	210	13	350	0.40	0.95	0.34	0.39	0.22	0.37	0.24	3575	4400	4700
	3700	300	375	300	275	16	200	19	210	19	350	19	350	16	180	19	190	19	180	16	300	0	16	220	13	350	0.39	0.95	0.34	0.39	0.22	0.37	0.24	3588	4425	4750
	4175	325	375	300	275	16	210	19	190	19	360	19	360	16	180	19	180	19	180	16	300	0	16	210	13	350	0.38	0.94	0.34	0.38	0.22	0.37	0.24	3588	4475	4775
	4675	325	400	325	275	16	190	19	200	19	330	19	330	16	180	19	190	19	190	16	300	0	16	220	13	350	0.38	0.94	0.34	0.38	0.22	0.37	0.24	3600	4500	4800
	5150	350	425	325	275	16	200	19	180	19	330	19	330	16	180	19	180	19	190	16	300	0	16	200	13	350	0.38	0.94	0.34	0.38	0.23	0.36	0.24	3600	4550	4850
	5625	375	425	350	275	16	200	19	190	19	340	19	340	16	180	19	180	19	170	16	300	0	16	210	13	350	0.37	0.93	0.34	0.41	0.23	0.39	0.27	3613	4575	4875
	6100	400	450	350	275	16	200	19	180	19	340	19	340	16	180	19	180	19	180	16	300	0	16	200	13	350	0.37	0.93	0.34	0.41	0.23	0.39	0.27	3613	4625	4925
	6600	400	475	375	275	16	190	19	190	19	320	19	320	16	170	19	180	19	180	16	300	0	16	210	13	350	0.37	0.93	0.33	0.41	0.23	0.39	0.27	3625	4650	4950
	7075	425	500	375	275	16	190	19	180	19	330	19	330	16	170	19	180	19	180	16	300	0	16	190	13	350	0.37	0.92	0.33	0.41	0.23	0.39	0.27	3625	4700	5000
	7575	425	500	400	275	16	180	19	190	19	320	19	320	16	170	19	180	19	180	16	300	0	16	200	13	350	0.37	0.92	0.33	0.41	0.23	0.39	0.27	3638	4700	5000
	8050	450	525	400	275	16	180	19	180	19	320	19	320	16	170	19	180	19	180	16	300	0	16	190	13	350	0.37	0.92	0.33	0.40	0.24	0.39	0.27	3638	4750	5050
	8525	475	525	425	275	16	180	19	190	19	330	19	330	16	160	19	180	19	170	16	300	0	16	200	13	350	0.37	0.92	0.33	0.41	0.24	0.38	0.27	3650	4775	5075
	9000	500	550	425	275	16	180	19	180	19	320	19	320	16	160	19	180	19	170	16	300	0	16	190	13	350	0.37	0.92	0.33	0.40	0.24	0.38	0.27	3650	4825	5100
	9500	500	575	425	275	16	170	19	170	19	320	19	320	16	160	19	170	19	170	16	300	0	16	180	13	350	0.37	0.91	0.32	0.40	0.24	0.38	0.27	3650	4850	5150

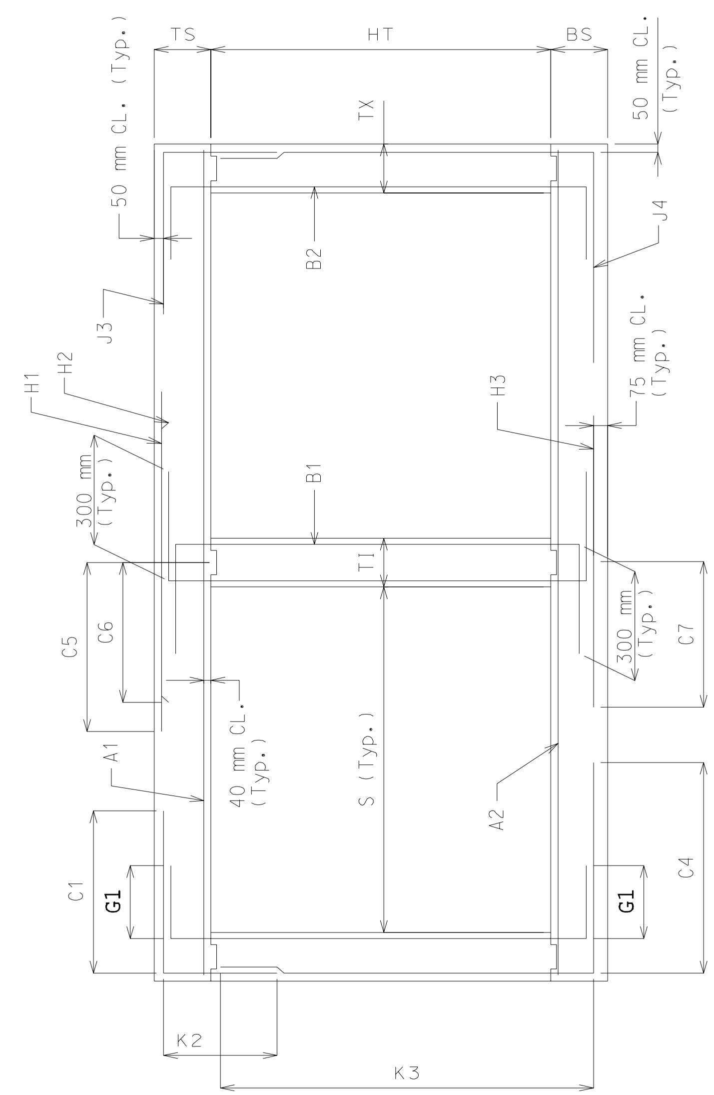

SECTION THRU BOX

NOTE: IF DESIGN FILL FALLS BETWEEN TABULATED FILLS, USE THE ADJACENT TABULATED FILL WHICH YIELDS THE GREATER MEMBER THICKNESS. IF THE MEMBER THICKNESSES ARE EQUAL, USE THE ADJACENT TABULATED FILL WHICH YIELDS THE GREATER AREA OF REINFORCEMENT.

SPECIAL DESIGNS ARE REQUIRED WHEN THE DESIGN FILL IS OUTSIDE THE RANGE OF TABULATED FILLS.

ALL DIMENSIONS ARE IN mm UNLESS OTHERWISE SPECIFIED.

COEFFICIENTS: DIMENSIONS MARKED WITH C# OR K# ARE THE PRODUCT OF THE COEFFICIENT AND ITS ASSOCIATED MULTIPLIER.

DESIGN FILL HEIGHT GIVEN IN THE TABLES IS THE HEIGHT FROM THE TOP OF THE EARTH FILL OR ROADWAY TO THE TOP OF THE TOP SLAB.

ALL CULVERTS MEET STRENGTH REQUIREMENTS FOR MILITARY 106 kN TANDEM AXLE LOADING.

MISSOURI HIGHWAY AND TRANSPORTATION COMMISSION			
CONCRETE DOUBLE BOX CULVERT MEMBER SIZES AND REINFORCEMENT (MS18 & MS18 MOD LOADING)			
DATE:	EFFECTIVE: 04-01-2002	M703.45B	8/13

Span (S) = 3.6 m; HT (m) = 2.7 or 3 or 3.3

	DESIGN FILL	MEMBER THICKNESSES				TOP SLAB BARS								BOTTOM SLAB BARS						WALL BARS								COEFFICIENTS (see note)							"C" Multiplier	"K" Multiplier		
		TS	BS	TX	TI	A1	Bars	J3	Bars	H1	Bars	H2	Bars	A2	Bars	J4	Bars	H3	Bars	B1	Bars		B2	Bars	F	Bars	J4		H3		J3		H1		H2	S = 3.6 m	HT = 2.7 m	HT = 3.0 m	HT = 3.3 m
	(mm)	Thick	Thick.	Thick	Thick.	Size	c to c	Size	c to c	Size	c to c	Size	c to c	Size	c to c	Size	c to c	Size	c to c	Size	c to c	G1	Size	c to c	Size	c to c	C4	K3	C7	C1	K2	C5	C6		mm	mm	mm	mm
MS18	200	300	300	225	225	19	220	16	190	19	380	19	380	16	200	22	210	19	170	16	300	300	16	180	13	350	0.44	0.93	0.46	0.40	0.27	0.81	0.34		3825	3175	3475	3775
MS18	725	275	275	225	225	19	200	16	160	22	410	22	410	16	180	19	180	22	180	16	300	300	16	300	13	350	0.35	0.94	0.45	0.48	0.27	0.70	0.31		3825	3125	3425	3725
MS18	1250	250	275	225	225	16	180	16	180	19	340	19	340	16	200	16	160	22	210	16	300	300	16	300	13	350	0.31	0.94	0.41	0.34	0.26	0.45	0.26		3825	3100	3400	3700
MS18	1750	250	300	225	225	16	190	16	170	19	320	19	320	16	190	16	170	22	200	16	300	300	16	300	13	350	0.29	0.94	0.40	0.31	0.26	0.40	0.24		3825	3100	3425	3725
MS18	2250	250	300	225	225	16	180	16	160	19	310	19	310	16	180	16	160	19	160	16	300	0	16	300	13	350	0.28	0.94	0.36	0.29	0.26	0.39	0.24		3825	3125	3425	3725
MS18 MOD	150	350	325	225	225	19	190	16	190	19	340	19	340	16	180	22	190	19	160	16	300	300	19	210	13	350	0.43	0.92	0.47	0.40	0.27	0.81	0.38		3825	3225	3525	3850
MS18 MOD	700	300	300	225	225	19	180	19	210	22	370	22	370	16	160	19	160	22	170	16	300	300	16	300	13	350	0.35	0.93	0.47	0.42	0.27	0.83	0.33		3825	3175	3475	3775
MS18 MOD	1250	250	275	225	225	16	160	16	160	22	400	22	400	16	180	19	210	22	180	16	300	300	16	300	13	350	0.32	0.94	0.42	0.35	0.26	0.49	0.29		3825	3100	3400	3700
MS18 MOD	1750	250	300	225	225	16	170	16	160	22	390	22	390	16	180	16	160	22	210	16	300	300	16	300	13	350	0.29	0.94	0.40	0.31	0.26	0.44	0.27		3825	3125	3425	3725
MS18 MOD	2225	275	325	225	225	16	190	16	160	19	320	19	320	16	190	16	160	19	160	16	300	0	16	300	13	350	0.28	0.94	0.36	0.29	0.26	0.40	0.24		3825	3175	3475	3775
MS18 or MS18 MOD	2725	275	350	225	225	16	180	19	210	22	410	22	410	16	170	16	170	22	210	16	300	0	16	300	13	350	0.27	0.94	0.38	0.30	0.26	0.40	0.26		3825	3175	3475	3800
MS18 or MS18 MOD	3200	300	350	225	225	16	180	19	210	22	420	22	420	16	170	19	220	19	160	16	300	0	16	300	13	350	0.28	0.93	0.34	0.28	0.27	0.39	0.26		3825	3225	3525	3825
MS18 or MS18 MOD	3675	325	375	250	225	16	180	16	160	22	420	22	420	16	170	16	160	19	160	16	300	0	16	300	13	350	0.27	0.93	0.34	0.27	0.27	0.39	0.26		3838	3275	3575	3875
MS18 or MS18 MOD	4150	350	400	250	225	16	180	19	220	19	310	19	310	16	170	16	160	19	160	16	300	0	16	300	13	350	0.26	0.92	0.34	0.28	0.27	0.39	0.26		3838	3325	3625	3925
MS18 or MS18 MOD	4625	375	425	250	225	16	180	19	210	19	310	19	310	16	170	19	210	19	160	16	300	0	16	300	13	350	0.27	0.92	0.34	0.31	0.28	0.42	0.29		3838	3375	3675	3975
MS18 or MS18 MOD	5100	400	450	275	225	16	170	19	220	22	400	22	400	16	170	16	160	19	160	16	300	0	16	300	13	350	0.26	0.92	0.34	0.31	0.28	0.42	0.29		3850	3425	3725	4000
MS18 or MS18 MOD	5600	400	475	275	225	16	170	19	210	22	400	22	400	16	160	16	160	22	210	16	300	0	16	300	13	350	0.25	0.91	0.37	0.31	0.29	0.42	0.29		3850	3425	3725	4050
MS18 or MS18 MOD	6075	425	475	300	225	16	170	16	160	22	400	22	400	16	160	16	160	22	210	16	300	0	16	300	13	350	0.26	0.91	0.37	0.29	0.28	0.42	0.29		3863	3475	3775	4075
MS18 or MS18 MOD	6550	450	500	300	225	16	170	19	220	22	400	22	400	16	160	19	220	22	210	16	300	0	16	300	13	350	0.27	0.90	0.37	0.31	0.29	0.42	0.29		3863	3525	3825	4125
MS18 or MS18 MOD	7025	475	525	300	225	16	160	19	210	22	400	22	400	16	160	19	220	22	210	16	300	0	16	280	13	350	0.27	0.90	0.37	0.31	0.29	0.42	0.29		3863	3575	3875	4175
MS18 or MS18 MOD	7500	500	550	325	225	16	160	19	220	22	410	22	410	16	160	16	160	22	210	16	300	0	16	300	13	350	0.26	0.89	0.36	0.31	0.29	0.41	0.29		3875	3625	3925	4225
MS18 or MS18 MOD	8000	500	550	325	225	16	160	19	210	22	390	22	390	19	220	19	220	22	200	16	300	0	16	290	13	350	0.27	0.89	0.36	0.31	0.29	0.41	0.29		3875	3625	3925	4225
MS18 or MS18 MOD	8475	525	575	325	225	16	160	19	210	22	400	22	400	19	220	19	210	22	210	16	300	0	16	260	13	350	0.27	0.89	0.36	0.31	0.30	0.41	0.29		3875	3675	3975	4275
MS18 or MS18 MOD	8950	550	600	350	225	16	160	19	210	22	380	22	380	19	210	16	160	22	210	16	300	0	16	290	13	350	0.26	0.89	0.36	0.31	0.30	0.41	0.29		3888	3725	4025	4300
MS18 or MS18 MOD	9450	550	625	350	225	19	220	19	210	22	380	22	380	19	200	16	160	22	200	16	300	0	16	270	13	350	0.26	0.88	0.36	0.31	0.30	0.41	0.29		3888	3725	4025	4350

SPAN (S) = 3.6 m; HT (m) = 3.6 or 3.9

	DESIGN FILL	MEMBER THICKNESSES				TOP SLAB BARS								BOTTOM SLAB BARS						WALL BARS								COEFFICIENTS (see note)							"C" Multiplier	"K" Multiplier	
		TS	BS	TX	TI	A1	Bars	J3	Bars	H1	Bars	H2	Bars	A2	Bars	J4	Bars	H3	Bars	B1	Bars		B2	Bars	F	Bars	J4		H3		J3		H1		H2	S = 3.6 m	HT = 3.6 m	HT = 3.9 m
	(mm)	Thick	Thick.	Thick	Thick.	Size	c to c	Size	c to c	Size	c to c	Size	c to c	Size	c to c	Size	c to c	Size	c to c	Size	c to c	G1	Size	c to c	Size	c to c	C4	K3	C7	C1	K2	C5	C6		mm	mm	mm
MS18	200	300	300	250	250	19	220	16	180	19	370	19	370	16	200	22	210	19	170	16	300	300	16	190	13	350	0.50	0.94	0.45	0.41	0.21	0.80	0.33		3850	4075	4375
MS18	725	275	275	250	250	19	200	19	220	22	410	22	410	16	170	19	170	22	170	16	300	300	16	300	13	350	0.41	0.95	0.44	0.50	0.22	0.83	0.31		3850	4025	4325
MS18	1250	250	275	250	250	16	190	16	160	19	340	19	340	16	190	19	210	22	200	16	300	300	16	300	13	350	0.38	0.95	0.41	0.40	0.20	0.44	0.26		3850	4000	4300
MS18	1750	250	300	250	250	16	190	16	160	19	320	19	320	16	190	19	210	22	220	16	300	300	16	290	13	350	0.36	0.95	0.39	0.36	0.20	0.40	0.24		3850	4025	4325
MS18	2250	250	325	250	250	16	180	19	210	22	410	22	410	16	180	19	200	19	160	16	300	0	16	290	13	350	0.35	0.95	0.35	0.36	0.21	0.42	0.26		3850	4025	4350
MS18 MOD	150	350	325	250	250	19	200	16	170	19	350	19	350	16	180	22	190	19	160	16	300	300	16	160	13	350	0.50	0.93	0.46	0.41	0.22	0.80	0.37		3850	4150	4450
MS18 MOD	700	300	300	250	250	19	180	19	200	22	370	22	370	16	160	22	200	22	170	16	300	300	16	300	13	350	0.44	0.94	0.46	0.42	0.24	0.83	0.33		3850	4075	4375
MS18 MOD	1250	250	300	250	250	16	160	19	220	22	400	22	400	16	180	19	200	22	180	16	300	300	16	300	13	350	0.38	0.95	0.42	0.42	0.21	0.49	0.29		3850	4000	4325
MS18 MOD	1750	250	300	250	250	16	170	19	210	22	400	22	400	16	180	19	200	22	200	16	300	300	16	290	13	350	0.36	0.95	0.40	0.38	0.21	0.44	0.27		3850	4025	4325
MS18 MOD	2225	275	325	250	250	16	190	19	210	19	320	19	320	16	180	19	200	19	160	16	300	0	16	290	13	350	0.35	0.95	0.36	0.36	0.22	0.39	0.24		3850	4075	4375
MS18 or MS18 MOD	2725	275	350	250	250	16	180	19	190	22	410	22	410	16	180	19	200	19	180	16	300	0	16	260	13	350	0.34	0.95	0.34	0.34	0.23	0.39	0.26		3850	4100	4400
MS18 or MS18 MOD	3200	300	375	275	250	16	180	19	210	19	310	19	310	16	170	19	210	19	160	16	300	0	16	280	13	350	0.33	0.94	0.34	0.33	0.24	0.36	0.23		3863	4125	4450
MS18 or MS18 MOD	3675	325	375	275	250	16	180	19	200	19	310	19	310	16	170	19	190	19	160	16	300	0	16	260	13	350	0.32	0.94	0.34	0.33	0.24	0.36	0.23		3863	4175	4475
MS18 or MS18 MOD	4150	350	400	300	250	16	190	19	210	19	320	19	320	16	170	19	210	19	160	16	300	0	16	270	13	350	0.32	0.93	0.34	0.32	0.24	0.36	0.23		3875	4225	4525
MS18 or MS18 MOD	4625	375	425	300	250	16	180	19	200	19	320	19	320	16	170	19	190	19	170	16	300	0	16	250	13	350	0.32	0.93	0.34	0.35	0.25	0.39	0.26		3875	4275	4575
MS18 or MS18 MOD	5125	375	450	300	250	16	170	19	180	22	400	22	400	16	170	19	180	19	170	16	300	0	16	240	13	350	0.32	0.93	0.33	0.35	0.24	0.42	0.29		3875	4300	4600
MS18 or MS18 MOD	5600	400	475	325	250	16	170	19	190	22	410	22	410	16	170	19	190	19	170	16	300	0	16	240	13	350	0.32	0.92	0.33	0.35	0.25	0.42	0.29		3888	4350	4650
MS18 or MS18 MOD	6075	425	475	325	250	16	170	19	180	22	410	22	410	16	160	19	180	19	160	16	300	0	16	230	13	350	0.31	0.92	0.33	0.35	0.25	0.42	0.29		3888	4375	4675
MS18 or MS18 MOD	6550	450	500	350	250	16	170	19	190	22	410	22	410	16	160	19	190	19	160	16	300	0	16	240	13	350	0.32	0.92	0.33	0.35	0.25	0.41	0.29		3900	4425	4725
MS18 or MS18 MOD	7025	475	525	350	250	16	170	19	190	19	310	19	310	16	160	19	180	19	160	16	300	0	16	220	13	350	0.32	0.91	0.33	0.35	0.26	0.38	0.26		3900	4475	4775
MS18 or MS18 MOD	7525	475	550	375	250	16	160	19	190	22	390	22	390	19	220	19	190	19	160	16	300	0	16	240	13	350	0.32	0.91	0.33	0.35	0.26	0.41	0.29		3913	4500	4800
MS18 or MS18 MOD	8000	500	550	375	250	16	170	19	190	22	410	22	410	19	220	19	180	22	210	16	300	0	16	220	13	350	0.32	0.91	0.35	0.35	0.26	0.41	0.29		3913	4525	4825
MS18 or MS18 MOD	8475	525	575	375	250	16	160	19	180	22	410	22	410	19	220	19	180	22	210	16	300	0	16	210	13	350	0.31	0.90	0.35	0.35	0.26	0.41	0.29		3913	4575	4875
MS18 or MS18 MOD	8975	525	600	400	250	16	160	19	180	22	390	22	390	19	210	19	190	22	210	16	300	0	16	220	13	350	0.32	0.90	0.35	0.35	0.26	0.40	0.29		3925	4600	4900
MS18 or MS18 MOD	9450	550	625	400	250	16	160	19	180	22	390	22	390	19	210	19	180	22	210	16	300	0	16	210	13	350	0.31	0.90	0.35	0.35	0.26	0.40	0.29		3925	4650	4950

SPAN (S) = 3.6 m; HT (m) = 4.2 or 4.5

	DESIGN FILL	MEMBER THICKNESSES				TOP SLAB BARS								BOTTOM SLAB BARS						WALL BARS								COEFFICIENTS (see note)							"C" Multiplier	"K" Multiplier	
		TS	BS	TX	TI	A1	Bars	J3	Bars	H1	Bars	H2	Bars	A2	Bars	J4	Bars	H3	Bars	B1	Bars		B2	Bars	F	Bars	J4		H3		J3		H1		H2	S = 3.6 m	HT = 4.2 m	HT = 4.5 m
	(mm)	Thick	Thick.	Thick	Thick.	Size	c to c	Size	c to c	Size	c to c	Size	c to c	Size	c to c	Size	c to c	Size	c to c	Size	c to c	G1	Size	c to c	Size	c to c	C4	K3	C7	C1	K2	C5	C6		mm	mm	mm
MS18	200	300	275	275	275	19	210	16	160	19	360	19	360	16	190	22	170	22	190	16	300	300	16	180	13	350	0.54	0.95	0.45	0.41	0.19	0.80	0.33		3875	4650	4950
MS18	725	275	300	275	275	19	210	19	210	19	310	19	310	16	170	19	160	22	170	16	300	300	16	260	13	350	0.48	0.95	0.45	0.43	0.21	0.80	0.28		3875	4625	4950
MS18	1250	250	275	275	275	16	190	19	210	19	340	19	340	16	180	19	160	22	200	16	300	300	16	220	13	350	0.43	0.96	0.40	0.48	0.19	0.44	0.26		3875	4600	4900
MS18	1750	250	300	275	275	16	190	19	200	19	320	19	320	16	180	19	180	19	160	16	300	300	16	210	13	350	0.41	0.96	0.36	0.43	0.19	0.40	0.24		3875	4625	4925
MS18	2250	250	325	275	275	16	190	19	190	19	310	19	310	16	180	19	180	19	180	16	300	0	16	200	13	350	0.40	0.96	0.35	0.41	0.20	0.39	0.24		3875	4650	4950
MS18 MOD	150	350	325	275	275	19	200	19	220	19	350	19	350	16	180	22	180	22	210	16	300	300	16	160	13	350	0.56	0.94	0.47	0.43	0.20	0.80	0.36		3875	4750	5050
MS18 MOD	675	325	325	275	275	19	180	19	190	22	380	22	380	16	160	22	200	22	170	16	300	300	16	270	13	350	0.51	0.95	0.46	0.43	0.21	0.83	0.34		3875	4675	5025
MS18 MOD	1200	300	300	275	275	16	190	19	200	22	400	22	400	16	180	19	180	22	200	16	300	300	16	220	13	350	0.44	0.96	0.42	0.49	0.19	0.49	0.29		3875	4675	4925
MS18 MOD	1750	250	300	275	275	16	170	19	190	22	400	22	400	16	170	19	180	22	200	16	300	300	16	210	13	350	0.41	0.96	0.40	0.43	0.20	0.44	0.27		3875	4625	4925
MS18 MOD	2225	275	325	275	275	16	190	19	180	19	320	19	320	16	170	19	170	19	160	16	300	0	16	210	13	350	0.40	0.95	0.36	0.41	0.20	0.39	0.24		3875	4675	4975
MS18 or MS18 MOD	2725	275	350	300	275	16	180	19	200	19	310	19	310	16	180	19	190	19	180	16	300	0	16	220	13	350	0.39	0.95	0.34	0.39	0.20	0.37	0.23		3888	4700	5000
MS18 or MS18 MOD	3200	300	375	300	275	16	180	19	180	19	310	19	310	16	180	19	180	19	180	16	300	0	16	200	13	350	0.39	0.95	0.34	0.38	0.21	0.36	0.23		3888	4750	5050
MS18 or MS18 MOD	3675	325	400	325	275	16	190	19	190	19	320	19	320	16	170	19	180	19	160	16	300	0	16	210	13	350	0.38	0.95	0.34	0.38	0.21	0.36	0.23		3900	4775	5100
MS18 or MS18 MOD	4150	350	400	325	275	16	190	19	180	19	320	19	320	16	170	19	170	19	160	16	300	0	16	200	13	350	0.37	0.94	0.34	0.37	0.21	0.36	0.23		3900	4825	5125
MS18 or MS18 MOD	4650	350	425	350	275	16	180	19	180	22	410	22	410	16	170	19	180	19	170	16	300	0	16	200	13	350	0.37	0.94	0.33	0.37	0.21	0.38	0.26		3913	4850	5150
MS18 or MS18 MOD	5125	375	450	350	275	16	180	19	180	22	410	22	410	16	160	19	170	19	170	16	300	0	16	190	13	350	0.37	0.94	0.33	0.40	0.22	0.42	0.29		3913	4900	5200
MS18 or MS18 MOD	5600	400	475	375	275	16	180	19	180	22	410	22	410	16	160	19	170	19	170	16	300	0	16	200	13	350	0.36	0.93	0.33	0.40	0.22	0.42	0.29		3925	4950	5250
MS18 or MS18 MOD	6075	425	500	375	275	16	180	19	170	19	310	19	310	16	160	19	160	19	170	16	300	0	16	180	13	350	0.36	0.93	0.33	0.39	0.22	0.38	0.26		3925	5000	5300
MS18 or MS18 MOD	6550	450	500	400	275	16	170	19	180	19	310	19	310	16	160	19	170	19	160	16	300	0	16	190	13	350	0.36	0.93	0.33	0.39	0.22	0.38	0.26		3938	5025	5325
MS18 or MS18 MOD	7050	450	525	400	275	16	170	19	170	22	400	22	400	19	220	19	160	19	160	16	300	0	16	180	13	350	0.36	0.93	0.32	0.39	0.22	0.41	0.29		3938	5050	5350
MS18 or MS18 MOD	7525	475	550	425	275	16	170	19	170	22	400	22	400	19	220	19	170	19	160	16	300	0	16	190	13	350	0.36	0.92	0.32	0.39	0.23	0.41	0.29		3950	5100	5400
MS18 or MS18 MOD	8000	500	550	425	275	16	170	19	170	19	310	19	310	19	220	19	160	22	210	16	300	0	16	180	13	350	0.36	0.92	0.35	0.39	0.23	0.37	0.26		3950	5125	5425
MS18 or MS18 MOD	8500	500	575	450	275	16	160	19	170	22	390	22	390	19	210	19	170	19	160	16	300	0	16	180	13	350	0.36	0.92	0.32	0.39	0.23	0.40	0.29		3963	5150	5450
MS18 or MS18 MOD	8975	525	600	450	275	16	160	19	160	22	400	22	400	19	210	19	160	19	160	16	300	0	16	180	13	350	0.36	0.91	0.32	0.39	0.23	0.40	0.29		3963	5200	5500
MS18 or MS18 MOD	9450	550	625	475	275	16	160	19	170	22	400	22	400	19	210	19	160	19	160	16	300	0	16	180	13	350	0.36	0.91	0.32	0.39	0.23	0.40	0.29		3975	5250	5550

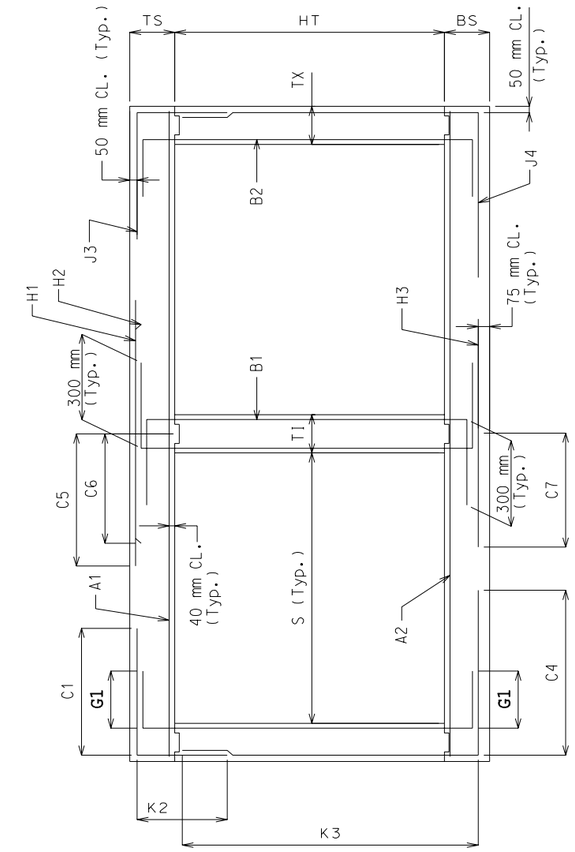

SECTION THRU BOX

NOTE: IF DESIGN FILL FALLS BETWEEN TABULATED FILLS, USE THE ADJACENT TABULATED FILL WHICH YIELDS THE GREATER MEMBER THICKNESS. IF THE MEMBER THICKNESSES ARE EQUAL, USE THE ADJACENT TABULATED FILL WHICH YIELDS THE GREATER AREA OF REINFORCEMENT.

SPECIAL DESIGNS ARE REQUIRED WHEN THE DESIGN FILL IS OUTSIDE THE RANGE OF TABULATED FILLS.

ALL DIMENSIONS ARE IN mm UNLESS OTHERWISE SPECIFIED.

COEFFICIENTS: DIMENSIONS MARKED WITH C# OR K# ARE THE PRODUCT OF THE COEFFICIENT AND ITS ASSOCIATED MULTIPLIER.

DESIGN FILL HEIGHT GIVEN IN THE TABLES IS THE HEIGHT FROM THE TOP OF THE EARTH FILL OR ROADWAY TO THE TOP OF THE TOP SLAB.

ALL CULVERTS MEET STRENGTH REQUIREMENTS FOR MILITARY 106 kN TANDEM AXLE LOADING.

MISSOURI HIGHWAY AND TRANSPORTATION COMMISSION

CONCRETE DOUBLE BOX CULVERT

MEMBER SIZES AND REINFORCEMENT

(MS18 & MS18 MOD LOADING)

DATE: | EFFECTIVE: 04-01-2002 | M703.45B | 9/13

Span (S) = 3.9 m
HT (m) = 3 or 3.3 or 3.6

Loading	DESIGN FILL (mm)	TS Thick	BS Thick.	TX Thick	TI Thick.	TOP SLAB A1 Size	A1 Bars c to c	J3 Size	J3 Bars c to c	H1 Size	H1 Bars c to c	H2 Size	H2 Bars c to c	BOTTOM SLAB A2 Size	A2 Bars c to c	J4 Size	J4 Bars c to c	H3 Size	H3 Bars c to c	WALL B1 Size	B1 Bars c to c	B2 Bars G1	B2 Size	B2 c to c	F Size	F Bars c to c	J4 C4	J4 K3	H3 C7	J3 C1	J3 K2	H1 C5	H2 C6	"C" Multiplier S = 3.9 m (mm)	"K" Multiplier HT = 3.0 m (mm)	HT = 3.3 m (mm)	HT = 3.6 m (mm)
MS18	200	300	300	250	250	19	200	16	180	19	350	19	350	16	190	22	190	22	210	16	300	300	16	160	13	350	0.43	0.94	0.47	0.40	0.25	0.80	0.32	4150	3475	3775	4075
	725	275	300	250	250	19	180	19	210	22	360	22	360	16	160	22	210	25	200	16	300	300	16	290	13	350	0.35	0.94	0.48	0.46	0.28	0.62	0.31	4150	3425	3725	4050
	1225	275	275	250	250	16	170	16	170	19	330	19	330	16	180	19	210	22	170	16	300	300	16	300	13	350	0.32	0.94	0.40	0.35	0.24	0.45	0.25	4150	3425	3725	4025
	1725	275	300	250	250	16	180	16	160	19	310	19	310	16	170	16	160	22	190	16	300	300	16	300	13	350	0.29	0.94	0.39	0.31	0.24	0.40	0.24	4150	3450	3750	4050
	2225	275	325	250	250	16	170	19	220	22	390	22	390	16	170	19	220	22	200	16	300	0	16	300	13	350	0.30	0.94	0.38	0.29	0.25	0.41	0.25	4150	3475	3775	4075
MS18 MOD	150	350	325	250	250	19	180	16	160	19	320	19	320	16	170	22	180	22	200	16	300	300	19	190	13	350	0.43	0.93	0.48	0.40	0.25	0.80	0.36	4150	3525	3850	4125
	675	325	325	250	250	19	170	19	210	22	360	22	360	16	160	22	200	22	160	16	300	300	16	280	13	350	0.38	0.93	0.46	0.42	0.28	0.82	0.33	4150	3500	3825	4125
	1225	275	300	250	250	19	210	19	220	22	390	22	390	16	170	19	200	22	180	16	300	300	16	300	13	350	0.32	0.94	0.41	0.35	0.25	0.49	0.28	4150	3450	3750	4050
	1725	275	325	250	250	16	160	19	220	22	380	22	380	16	170	19	220	22	200	16	300	300	16	300	13	350	0.31	0.94	0.40	0.33	0.25	0.43	0.26	4150	3475	3775	4075
	2225	275	325	250	250	16	160	19	210	22	370	22	370	16	160	19	210	22	190	16	300	0	16	300	13	350	0.30	0.94	0.38	0.31	0.25	0.41	0.26	4150	3475	3775	4075
MS18 or MS18 MOD	2700	300	350	250	250	16	160	19	210	22	390	22	390	16	160	19	220	22	190	16	300	0	16	300	13	350	0.29	0.94	0.37	0.29	0.25	0.39	0.25	4150	3525	3825	4125
	3175	325	375	250	250	16	170	19	200	22	390	22	390	16	160	19	210	22	200	16	300	0	16	300	13	350	0.28	0.93	0.37	0.28	0.26	0.38	0.25	4150	3575	3875	4175
	3650	350	400	250	250	16	170	19	190	22	390	22	390	16	160	19	190	22	200	16	300	0	16	300	13	350	0.28	0.93	0.36	0.28	0.26	0.38	0.25	4150	3625	3925	4225
	4125	375	425	275	250	16	170	19	210	22	390	22	390	16	160	19	210	22	200	16	300	0	16	300	13	350	0.28	0.92	0.36	0.31	0.29	0.41	0.28	4163	3675	3975	4275
	4600	400	450	275	250	16	170	19	200	22	390	22	390	16	160	19	200	22	200	16	300	0	16	290	13	350	0.27	0.92	0.36	0.30	0.27	0.41	0.28	4163	3725	4025	4325
	5075	425	475	300	250	16	160	19	210	22	390	22	390	19	220	19	210	22	200	16	300	0	16	300	13	350	0.27	0.91	0.36	0.30	0.27	0.41	0.28	4175	3775	4075	4375
	5550	450	500	300	250	16	160	19	190	22	370	22	370	19	220	19	210	22	200	16	300	0	16	290	13	350	0.27	0.91	0.36	0.30	0.27	0.41	0.28	4175	3825	4125	4400
	6050	450	525	300	250	19	220	19	190	22	360	22	360	19	210	19	200	22	200	16	300	0	16	260	13	350	0.27	0.91	0.35	0.30	0.27	0.41	0.28	4175	3850	4150	4450
	6525	475	550	325	250	19	220	19	200	22	360	22	360	19	210	19	210	22	200	16	300	0	16	280	13	350	0.27	0.90	0.35	0.30	0.27	0.41	0.28	4188	3900	4200	4500
	7000	500	550	325	250	19	210	19	190	22	360	22	360	19	200	19	190	22	190	16	300	0	16	260	13	350	0.27	0.90	0.36	0.30	0.30	0.40	0.28	4188	3925	4225	4525
	7475	525	575	350	250	19	210	19	200	22	360	22	360	19	200	19	210	22	190	16	300	0	16	280	13	350	0.27	0.90	0.35	0.30	0.28	0.40	0.28	4200	3975	4275	4575
	7950	550	600	350	250	19	210	19	200	22	360	22	360	19	200	19	200	22	190	16	300	0	16	250	13	350	0.27	0.89	0.35	0.30	0.28	0.40	0.28	4200	4025	4325	4625
	8450	550	625	350	250	19	210	19	190	22	350	22	350	19	200	19	200	22	190	16	300	0	16	240	13	350	0.27	0.89	0.35	0.30	0.30	0.40	0.28	4200	4050	4350	4650
	8925	575	625	375	250	19	200	19	200	22	350	22	350	19	190	19	200	22	180	16	300	0	16	260	13	350	0.27	0.89	0.35	0.30	0.29	0.40	0.27	4213	4075	4375	4675
	9400	600	650	375	250	19	200	19	190	22	360	22	360	19	190	19	190	22	180	16	300	0	16	240	13	350	0.27	0.88	0.35	0.30	0.29	0.40	0.27	4213	4125	4425	4725

SPAN (S) = 3.9 m
HT (m) = 3.9 or 4.2

Loading	DESIGN FILL (mm)	TS Thick	BS Thick.	TX Thick	TI Thick.	TOP SLAB A1 Size	A1 Bars c to c	J3 Size	J3 Bars c to c	H1 Size	H1 Bars c to c	H2 Size	H2 Bars c to c	BOTTOM SLAB A2 Size	A2 Bars c to c	J4 Size	J4 Bars c to c	H3 Size	H3 Bars c to c	WALL B1 Size	B1 Bars c to c	B2 Bars G1	B2 Size	B2 c to c	F Size	F Bars c to c	J4 C4	J4 K3	H3 C7	J3 C1	J3 K2	H1 C5	H2 C6	"C" Multiplier S = 3.9 m (mm)	"K" Multiplier HT = 3.9 m (mm)	HT = 4.2 m (mm)
MS18	200	300	275	275	275	19	200	16	160	19	340	19	340	16	190	22	180	22	180	16	300	300	16	160	13	350	0.47	0.95	0.45	0.40	0.20	0.80	0.32	4175	4350	4650
	725	275	300	275	275	19	180	19	200	22	370	22	370	16	170	19	160	22	180	16	300	300	16	300	13	350	0.40	0.95	0.44	0.52	0.22	0.82	0.30	4175	4350	4650
	1225	275	300	275	275	16	170	16	160	19	330	19	330	16	180	19	190	22	200	16	300	300	16	300	13	350	0.37	0.95	0.40	0.40	0.19	0.45	0.25	4175	4350	4650
	1725	275	300	275	275	16	180	19	210	19	310	19	310	16	170	19	190	22	190	16	300	300	16	290	13	350	0.35	0.95	0.39	0.38	0.22	0.40	0.24	4175	4350	4650
	2225	275	325	275	275	16	170	19	200	22	390	22	390	16	160	19	190	22	200	16	300	0	16	270	13	350	0.34	0.95	0.37	0.35	0.22	0.41	0.26	4175	4375	4675
MS18 MOD	150	350	325	275	275	19	190	16	160	19	320	19	320	16	170	22	180	22	200	16	300	300	19	210	13	350	0.48	0.94	0.47	0.40	0.21	0.80	0.36	4175	4450	4750
	675	325	325	275	275	19	170	19	200	22	360	22	360	19	220	22	200	22	170	16	300	300	16	300	13	350	0.43	0.94	0.45	0.42	0.23	0.82	0.32	4175	4425	4725
	1225	275	300	275	275	19	220	19	210	22	390	22	390	16	170	19	180	22	180	16	300	300	16	300	13	350	0.37	0.95	0.41	0.42	0.22	0.49	0.28	4175	4350	4650
	1725	275	325	275	275	16	160	19	200	22	390	22	390	16	170	19	190	22	200	16	300	300	16	290	13	350	0.36	0.95	0.40	0.38	0.22	0.44	0.27	4175	4375	4675
	2225	275	350	275	275	16	160	19	190	22	370	22	370	16	170	19	190	22	210	16	300	0	16	270	13	350	0.34	0.95	0.38	0.35	0.22	0.41	0.26	4175	4400	4700
MS18 or MS18 MOD	2700	300	375	275	275	16	170	19	180	22	390	22	390	16	160	19	160	22	190	16	300	0	16	250	13	350	0.33	0.95	0.37	0.34	0.22	0.39	0.25	4175	4425	4750
	3175	325	375	275	275	16	170	19	180	22	400	22	400	16	160	19	170	22	200	16	300	0	16	240	13	350	0.32	0.94	0.36	0.32	0.22	0.38	0.25	4175	4475	4775
	3650	350	400	300	275	16	170	19	190	22	400	22	400	16	160	19	180	22	200	16	300	0	16	240	13	350	0.32	0.94	0.36	0.32	0.23	0.38	0.25	4188	4525	4825
	4125	375	425	300	275	16	170	19	180	22	400	22	400	19	220	19	170	22	200	16	300	0	16	230	13	350	0.31	0.93	0.36	0.34	0.23	0.41	0.28	4188	4575	4875
	4600	400	450	325	275	16	170	19	190	22	400	22	400	19	220	19	180	22	200	16	300	0	16	240	13	350	0.31	0.93	0.35	0.34	0.23	0.41	0.28	4200	4625	4925
	5075	425	475	325	275	16	160	19	170	22	370	22	370	19	220	19	170	22	200	16	300	0	16	220	13	350	0.31	0.93	0.35	0.34	0.24	0.41	0.28	4200	4675	4950
	5575	425	500	350	275	16	160	19	180	22	370	22	370	19	210	19	180	22	210	16	300	0	16	230	13	350	0.31	0.92	0.35	0.34	0.23	0.41	0.28	4213	4700	5000
	6050	450	525	350	275	16	160	19	170	22	370	22	370	19	210	19	170	22	210	16	300	0	16	220	13	350	0.31	0.92	0.35	0.34	0.24	0.40	0.28	4213	4750	5050
	6525	475	550	375	275	16	160	19	180	22	370	22	370	19	210	19	180	22	200	16	300	0	16	220	13	350	0.31	0.92	0.35	0.34	0.24	0.40	0.28	4225	4800	5100
	7000	500	575	375	275	19	220	19	170	22	370	22	370	19	210	19	170	22	200	16	300	0	16	210	13	350	0.31	0.91	0.35	0.34	0.24	0.40	0.28	4225	4850	5150
	7475	525	575	400	275	19	220	19	180	22	370	22	370	19	200	19	180	22	190	16	300	0	16	220	13	350	0.31	0.91	0.35	0.34	0.25	0.40	0.28	4238	4875	5175
	7950	550	600	400	275	19	220	19	170	22	370	22	370	19	200	19	170	22	190	16	300	0	16	200	13	350	0.31	0.90	0.35	0.34	0.25	0.40	0.28	4238	4925	5225
	8450	550	625	425	275	19	210	19	170	22	360	22	360	19	190	19	180	22	190	16	300	0	16	220	13	350	0.31	0.90	0.34	0.34	0.25	0.40	0.27	4250	4950	5250
	8925	575	650	425	275	19	210	19	170	22	360	22	360	19	200	19	170	22	200	16	300	0	16	200	13	350	0.31	0.90	0.34	0.34	0.25	0.39	0.27	4250	5000	5300
	9400	600	650	425	275	19	210	19	160	22	370	22	370	19	190	19	160	22	190	16	300	0	16	190	13	350	0.31	0.90	0.34	0.34	0.25	0.39	0.27	4250	5025	5325

SPAN (S) = 3.9 m
HT (m) = 4.5 or 4.8

Loading	DESIGN FILL (mm)	TS Thick	BS Thick.	TX Thick	TI Thick.	TOP SLAB A1 Size	A1 Bars c to c	J3 Size	J3 Bars c to c	H1 Size	H1 Bars c to c	H2 Size	H2 Bars c to c	BOTTOM SLAB A2 Size	A2 Bars c to c	J4 Size	J4 Bars c to c	H3 Size	H3 Bars c to c	WALL B1 Size	B1 Bars c to c	B2 Bars G1	B2 Size	B2 c to c	F Size	F Bars c to c	J4 C4	J4 K3	H3 C7	J3 C1	J3 K2	H1 C5	H2 C6	"C" Multiplier S = 3.9 m (mm)	"K" Multiplier HT = 4.5 m (mm)	HT = 4.8 m (mm)
MS18	200	300	300	300	300	19	190	19	220	19	340	19	340	16	190	22	170	22	190	16	300	300	16	180	13	350	0.53	0.95	0.45	0.42	0.20	0.80	0.31	4200	4975	5275
	725	275	300	300	300	19	180	19	190	22	370	22	370	16	160	22	180	22	170	16	300	300	16	240	13	350	0.48	0.96	0.43	0.42	0.19	0.82	0.30	4200	4950	5250
	1225	275	300	300	300	16	170	19	210	19	320	19	320	16	180	19	160	22	190	16	300	300	16	220	13	350	0.42	0.96	0.40	0.47	0.19	0.44	0.25	4200	4950	5250
	1725	275	325	300	300	16	180	19	190	19	310	19	310	16	170	19	170	22	210	16	300	300	16	210	13	350	0.40	0.96	0.38	0.42	0.19	0.40	0.24	4200	4975	5275
	2225	275	350	300	300	16	170	19	180	22	400	22	400	16	160	19	170	22	200	16	300	0	16	190	13	350	0.39	0.96	0.37	0.40	0.19	0.40	0.26	4200	4975	5300
MS18 MOD	150	350	325	300	300	19	190	19	210	19	320	19	320	16	170	22	170	22	190	16	300	300	19	220	13	350	0.53	0.94	0.46	0.42	0.20	0.80	0.35	4200	5050	5350
	675	325	325	300	300	19	170	19	180	22	360	22	360	19	220	22	180	22	170	16	300	300	16	250	13	350	0.48	0.95	0.45	0.42	0.20	0.82	0.32	4200	5025	5325
	1225	275	300	300	300	19	220	19	190	22	390	22	390	16	160	22	200	22	180	16	300	300	16	220	13	350	0.44	0.96	0.41	0.48	0.19	0.49	0.28	4200	4950	5250
	1725	275	325	300	300	16	160	19	180	22	380	22	380	16	160	19	170	22	190	16	300	300	16	210	13	350	0.40	0.96	0.39	0.43	0.19	0.43	0.27	4200	4975	5275
	2225	275	350	300	300	16	160	19	170	22	370	22	370	16	160	19	160	22	210	16	300	0	16	190	13	350	0.39	0.96	0.38	0.40	0.19	0.41	0.26	4200	5000	5300
MS18 or MS18 MOD	2700	300	375	300	300	16	170	19	170	22	390	22	390	16	160	19	160	22	220	16	300	0	16	180	13	350	0.39	0.95	0.36	0.38	0.19	0.39	0.25	4200	5050	5350
	3175	325	400	325	300	16	170	19	180	22	400	22	400	16	160	19	170	19	160	16	300	0	16	190	13	350	0.38	0.95	0.33	0.38	0.20	0.38	0.25	4213	5100	5400
	3650	350	425	350	300	16	170	19	180	22	400	22	400	19	220	19	170	22	200	16	300	0	16	200	13	350	0.37	0.95	0.35	0.37	0.20	0.38	0.25	4225	5125	5450
	4125	375	425	350	300	16	170	19	170	22	400	22	400	19	220	19	160	22	200	16	300	0	16	190	13	350	0.36	0.94	0.35	0.39	0.20	0.41	0.28	4225	5175	5475
	4625	375	450	375	300	16	160	19	180	22	370	22	370	19	210	19	160	22	210	16	300	0	16	190	13	350	0.36	0.94	0.35	0.39	0.20	0.41	0.28	4238	5200	5500
	5100	400	475	375	300	16	160	19	160	22	370	22	370	19	210	19	160	22	210	16	300	0	16	180	13	350	0.36	0.94	0.35	0.38	0.21	0.41	0.28	4238	5250	5550
	5575	425	500	400	300	16	160	19	170	22	370	22	370	19	210	19	160	22	210	16	300	0	16	180	13	350	0.35	0.93	0.34	0.38	0.21	0.40	0.28	4250	5300	5600
	6050	450	525	400	300	16	160	19	160	22	370	22	370	19	210	22	210	22	210	16	300	0	16	180	13	350	0.38	0.93	0.34	0.38	0.21	0.40	0.28	4250	5350	5650
	6525	475	550	425	300	16	160	19	160	22	380	22	380	19	210	19	160	22	210	16	300	0	16	180	13	350	0.35	0.93	0.34	0.38	0.21	0.40	0.28	4263	5400	5700
	7000	500	575	425	300	16	160	19	160	22	380	22	380	19	210	22	210	22	210	16	300	0	16	170	13	350	0.37	0.92	0.34	0.38	0.22	0.40	0.28	4263	5450	5750
	7475	525	600	450	300	16	160	19	160	22	380	22	380	19	200	22	210	22	200	16	300	0	16	170	13	350	0.37	0.92	0.34	0.38	0.22	0.40	0.28	4275	5500	5800
	7975	525	600	450	300	19	210	22	210	22	360	22	360	19	190	22	200	22	190	16	300	0	16	170	13	350	0.37	0.92	0.34	0.41	0.24	0.39	0.28	4275	5500	5800
	8450	550	625	475	300	19	210	22	210	22	360	22	360	19	190	22	210	22	190	16	300	0	16	170	13	350	0.37	0.92	0.34	0.41	0.24	0.39	0.27	4288	5550	5850
	8925	575	650	475	300	19	220	22	210	22	370	22	370	19	200	22	200	22	200	16	300	0	16	160	13	350	0.37	0.91	0.33	0.41	0.24	0.39	0.27	4288	5600	5900
	9400	600	650	500	300	19	210	22	210	22	360	22	360	19	190	22	210	22	190	16	300	0	16	170	13	350	0.37	0.91	0.34	0.41	0.24	0.39	0.27	4300	5625	5900

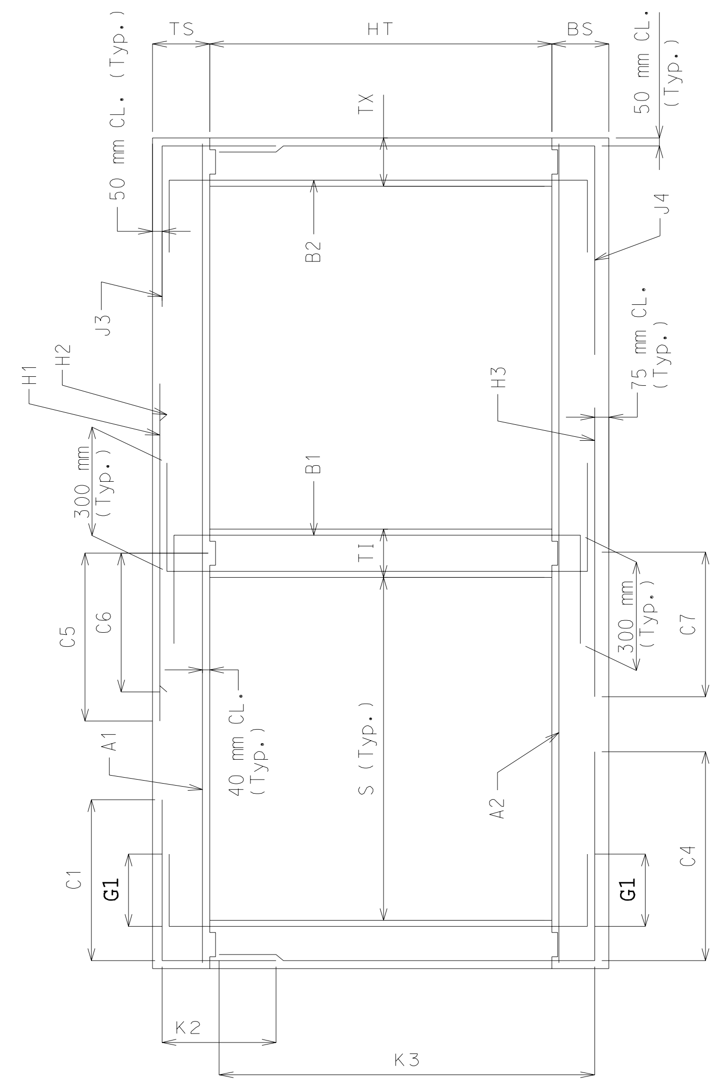

SECTION THRU BOX

NOTE: IF DESIGN FILL FALLS BETWEEN TABULATED FILLS, USE THE ADJACENT TABULATED FILL WHICH YIELDS THE GREATER MEMBER THICKNESS. IF THE MEMBER THICKNESSES ARE EQUAL, USE THE ADJACENT TABULATED FILL WHICH YIELDS THE GREATER AREA OF REINFORCEMENT.

SPECIAL DESIGNS ARE REQUIRED WHEN THE DESIGN FILL IS OUTSIDE THE RANGE OF TABULATED FILLS.

ALL DIMENSIONS ARE IN mm UNLESS OTHERWISE SPECIFIED.

COEFFICIENTS: DIMENSIONS MARKED WITH C# OR K# ARE THE PRODUCT OF THE COEFFICIENT AND ITS ASSOCIATED MULTIPLIER.

DESIGN FILL HEIGHT GIVEN IN THE TABLES IS THE HEIGHT FROM THE TOP OF THE EARTH FILL OR ROADWAY TO THE TOP OF THE TOP SLAB.

ALL CULVERTS MEET STRENGTH REQUIREMENTS FOR MILITARY 106 kN TANDEM AXLE LOADING.

MISSOURI HIGHWAY AND TRANSPORTATION COMMISSION

CONCRETE DOUBLE BOX CULVERT

MEMBER SIZES AND REINFORCEMENT

(MS18 & MS18 MOD LOADING)

DATE: EFFECTIVE: 04-01-2002 **M703.45B**

Span (S) = 4.2 m
HT (m) = 3.3 or 3.6

Loading	DESIGN FILL (mm)	TS Thick	BS Thick.	TX Thick	TI Thick.	A1 Size	A1 Bars c to c	J3 Size	J3 Bars c to c	H1 Size	H1 Bars c to c	H2 Size	H2 Bars c to c	A2 Size	A2 Bars c to c	J4 Size	J4 Bars c to c	H3 Size	H3 Bars c to c	B1 Size	B1 Bars c to c	G1	B2 Size	B2 Bars c to c	F Size	F Bars c to c	J4: C4	J4: K3	H3: C7	J3: C1	J3: K2	H1: C5	H2: C6	"C" Multiplier S = 4.2 m (mm)	"K" Multiplier HT = 3.3 m (mm)	"K" Multiplier HT = 3.6 m (mm)
MS18	200	300	325	250	250	19	180	16	170	19	330	19	330	16	180	22	190	22	210	16	300	300	16	160	13	350	0.41	0.94	0.47	0.39	0.23	0.79	0.30	4450	3800	4100
MS18	700	300	300	250	250	19	170	19	210	22	360	22	360	16	160	22	210	22	160	16	300	300	16	300	13	350	0.33	0.94	0.43	0.42	0.26	0.61	0.30	4450	3775	4075
MS18	1225	275	300	250	250	19	220	16	160	22	390	22	390	16	170	19	200	22	180	16	300	300	16	300	13	350	0.30	0.94	0.40	0.32	0.22	0.46	0.26	4450	3750	4050
MS18	1725	275	325	250	250	19	220	19	210	22	360	22	360	16	170	19	210	22	190	16	300	300	16	300	13	350	0.29	0.94	0.38	0.30	0.25	0.42	0.25	4450	3775	4075
MS18	2200	300	350	250	250	16	160	19	210	22	370	22	370	16	160	19	210	22	190	16	300	0	16	300	13	350	0.28	0.94	0.37	0.28	0.25	0.40	0.25	4450	3825	4125
MS18 MOD	175	325	325	250	250	19	160	19	220	22	390	22	390	16	160	22	160	22	180	16	290	300	19	180	13	350	0.41	0.93	0.47	0.41	0.26	0.82	0.35	4450	3825	4125
MS18 MOD	675	325	325	250	250	22	210	19	190	22	330	22	330	19	210	22	190	25	200	16	290	300	16	250	13	350	0.35	0.93	0.49	0.41	0.26	0.82	0.31	4450	3825	4125
MS18 MOD	1225	275	300	250	250	19	190	19	200	22	350	22	350	16	160	19	180	22	160	16	300	300	16	300	13	350	0.30	0.94	0.41	0.34	0.25	0.48	0.27	4450	3750	4050
MS18 MOD	1700	300	325	250	250	19	210	19	210	22	360	22	360	16	160	19	200	22	170	16	300	300	16	300	13	350	0.29	0.94	0.39	0.30	0.26	0.43	0.26	4450	3800	4100
MS18 MOD	2200	300	350	250	250	19	210	19	200	22	350	22	350	19	220	19	200	22	180	16	300	0	16	300	13	350	0.28	0.94	0.38	0.29	0.25	0.41	0.25	4450	3825	4125
MS18 or MS18 MOD	2675	325	375	250	250	19	220	19	200	22	360	22	360	19	220	19	210	22	180	16	300	0	16	300	13	350	0.27	0.93	0.37	0.27	0.26	0.38	0.24	4450	3875	4175
MS18 or MS18 MOD	3150	350	400	250	250	19	220	19	190	22	360	22	360	19	210	19	200	22	180	16	300	0	16	300	13	350	0.26	0.93	0.36	0.26	0.26	0.38	0.24	4450	3925	4225
MS18 or MS18 MOD	3625	375	425	250	250	16	160	19	190	22	360	22	360	19	210	19	190	22	190	16	300	0	16	300	13	350	0.25	0.92	0.36	0.28	0.26	0.40	0.27	4450	3975	4275
MS18 or MS18 MOD	4100	400	450	275	250	19	220	19	200	22	360	22	360	19	210	19	210	22	190	16	300	0	16	300	13	350	0.25	0.92	0.35	0.28	0.27	0.40	0.27	4463	4025	4325
MS18 or MS18 MOD	4575	425	475	275	250	19	220	19	190	22	360	22	360	19	210	19	200	22	180	16	300	0	16	300	13	350	0.25	0.91	0.35	0.28	0.27	0.40	0.27	4463	4075	4375
MS18 or MS18 MOD	5050	450	500	300	250	19	220	19	210	22	350	22	350	19	200	19	210	22	180	16	300	0	16	300	13	350	0.25	0.91	0.35	0.28	0.27	0.40	0.27	4475	4125	4425
MS18 or MS18 MOD	5525	475	525	300	250	19	210	19	200	22	350	22	350	19	200	19	200	22	180	16	300	0	16	290	13	350	0.25	0.90	0.35	0.28	0.28	0.40	0.27	4475	4175	4475
MS18 or MS18 MOD	6000	500	550	300	250	19	210	19	190	22	350	22	350	19	200	19	190	22	180	16	300	0	16	260	13	350	0.25	0.90	0.35	0.27	0.28	0.39	0.27	4475	4225	4525
MS18 or MS18 MOD	6475	525	575	325	250	19	210	19	200	22	350	22	350	19	190	19	200	22	180	16	300	0	16	280	13	350	0.25	0.90	0.35	0.28	0.28	0.39	0.27	4488	4275	4575
MS18 or MS18 MOD	6950	550	600	325	250	19	210	19	190	22	350	22	350	19	190	19	200	22	180	16	300	0	16	260	13	350	0.25	0.89	0.35	0.27	0.28	0.39	0.27	4488	4325	4625
MS18 or MS18 MOD	7425	575	625	350	250	19	200	19	200	22	350	22	350	19	190	19	210	22	180	16	300	0	16	270	13	350	0.25	0.89	0.34	0.28	0.29	0.39	0.26	4500	4375	4675
MS18 or MS18 MOD	7900	600	650	350	250	19	200	19	200	22	350	22	350	19	190	19	200	22	180	16	300	0	16	250	13	350	0.25	0.88	0.34	0.27	0.29	0.39	0.26	4500	4425	4725
MS18 or MS18 MOD	8400	600	675	350	250	19	190	19	180	22	330	22	330	19	180	19	200	22	180	16	300	0	16	240	13	350	0.24	0.88	0.34	0.27	0.29	0.39	0.26	4500	4450	4750
MS18 or MS18 MOD	8875	625	700	375	250	19	190	19	190	22	330	22	330	19	180	19	210	22	170	16	300	0	16	250	13	350	0.25	0.88	0.34	0.28	0.29	0.39	0.26	4513	4475	4800
MS18 or MS18 MOD	9350	650	700	375	250	19	190	19	190	22	330	22	330	19	180	19	200	22	170	16	300	0	16	240	13	350	0.25	0.88	0.34	0.28	0.29	0.38	0.26	4513	4525	4825

SPAN (S) = 4.2 m
HT (m) = 3.9 or 4.2

Loading	DESIGN FILL (mm)	TS Thick	BS Thick.	TX Thick	TI Thick.	A1 Size	A1 Bars c to c	J3 Size	J3 Bars c to c	H1 Size	H1 Bars c to c	H2 Size	H2 Bars c to c	A2 Size	A2 Bars c to c	J4 Size	J4 Bars c to c	H3 Size	H3 Bars c to c	B1 Size	B1 Bars c to c	G1	B2 Size	B2 Bars c to c	F Size	F Bars c to c	J4: C4	J4: K3	H3: C7	J3: C1	J3: K2	H1: C5	H2: C6	"C" Multiplier S = 4.2 m (mm)	"K" Multiplier HT = 3.9 m (mm)	"K" Multiplier HT = 4.2 m (mm)
MS18	200	300	300	275	275	19	190	16	160	19	320	19	320	16	180	22	180	22	180	16	300	300	16	160	13	350	0.44	0.95	0.45	0.40	0.20	0.79	0.30	4475	4375	4675
MS18	700	300	300	275	275	19	170	19	190	22	360	22	360	19	220	22	200	25	180	16	300	300	16	300	13	350	0.40	0.95	0.46	0.51	0.22	0.67	0.30	4475	4375	4675
MS18	1225	275	300	275	275	19	220	19	210	22	390	22	390	16	170	19	180	22	180	16	300	300	16	300	13	350	0.35	0.95	0.39	0.38	0.22	0.46	0.27	4475	4350	4650
MS18	1725	275	325	275	275	16	160	19	200	22	360	22	360	16	160	19	190	22	190	16	300	300	16	300	13	350	0.33	0.95	0.38	0.35	0.22	0.42	0.25	4475	4375	4675
MS18	2200	300	350	275	275	16	160	19	190	22	370	22	370	16	160	19	180	22	190	16	300	0	16	290	13	350	0.31	0.95	0.37	0.32	0.22	0.40	0.25	4475	4425	4725
MS18 MOD	150	350	325	275	275	19	170	19	220	22	410	22	410	16	160	22	170	22	180	16	300	300	19	190	13	350	0.45	0.94	0.46	0.41	0.23	0.82	0.36	4475	4450	4750
MS18 MOD	675	325	325	275	275	22	210	19	180	22	320	22	320	19	200	22	180	25	200	16	300	300	16	240	13	350	0.40	0.94	0.48	0.41	0.23	0.82	0.31	4475	4425	4725
MS18 MOD	1225	275	325	275	275	19	190	19	190	22	350	22	350	19	220	19	170	22	160	16	300	300	16	300	13	350	0.35	0.95	0.40	0.39	0.22	0.48	0.27	4475	4350	4675
MS18 MOD	1700	300	350	275	275	19	220	19	190	22	360	22	360	19	220	19	180	22	170	16	300	300	16	300	13	350	0.33	0.95	0.39	0.35	0.22	0.43	0.26	4475	4400	4725
MS18 MOD	2200	300	350	275	275	19	220	19	180	22	350	22	350	19	210	19	180	22	180	16	300	0	16	290	13	350	0.31	0.95	0.37	0.33	0.22	0.41	0.25	4475	4425	4725
MS18 or MS18 MOD	2675	325	375	275	275	16	160	19	180	22	370	22	370	19	210	19	180	22	180	16	300	0	16	270	13	350	0.30	0.94	0.37	0.31	0.22	0.38	0.24	4475	4475	4775
MS18 or MS18 MOD	3150	350	400	275	275	16	160	19	170	22	370	22	370	19	210	19	170	22	180	16	300	0	16	240	13	350	0.30	0.94	0.36	0.30	0.23	0.37	0.24	4475	4525	4825
MS18 or MS18 MOD	3625	375	425	300	275	16	160	19	180	22	370	22	370	19	210	19	180	22	190	16	300	0	16	260	13	350	0.29	0.93	0.35	0.32	0.23	0.40	0.27	4488	4575	4875
MS18 or MS18 MOD	4100	400	450	300	275	16	160	19	170	22	360	22	360	19	200	19	170	22	190	16	300	0	16	240	13	350	0.29	0.93	0.35	0.32	0.23	0.40	0.27	4488	4625	4925
MS18 or MS18 MOD	4575	425	475	325	275	16	160	19	180	22	360	22	360	19	200	19	180	22	190	16	300	0	16	240	13	350	0.29	0.92	0.35	0.32	0.24	0.40	0.27	4500	4675	4975
MS18 or MS18 MOD	5050	450	500	325	275	19	220	19	170	22	360	22	360	19	200	19	170	22	180	16	300	0	16	230	13	350	0.29	0.92	0.35	0.31	0.24	0.40	0.27	4500	4725	5025
MS18 or MS18 MOD	5525	475	525	350	275	19	220	19	180	22	360	22	360	19	200	19	180	22	180	16	300	0	16	240	13	350	0.29	0.92	0.35	0.31	0.24	0.39	0.27	4513	4775	5075
MS18 or MS18 MOD	6000	500	550	350	275	19	210	19	170	22	360	22	360	19	190	19	170	22	180	16	300	0	16	220	13	350	0.28	0.91	0.34	0.31	0.24	0.39	0.27	4513	4825	5125
MS18 or MS18 MOD	6475	525	575	375	275	19	210	19	180	22	350	22	350	19	190	19	180	22	180	16	300	0	16	230	13	350	0.29	0.91	0.34	0.31	0.25	0.39	0.27	4525	4875	5175
MS18 or MS18 MOD	6950	550	600	375	275	19	210	19	170	22	350	22	350	19	190	19	170	22	180	16	300	0	16	210	13	350	0.28	0.90	0.34	0.31	0.25	0.39	0.27	4525	4925	5225
MS18 or MS18 MOD	7425	575	625	400	275	19	210	19	180	22	350	22	350	19	190	19	180	22	180	16	300	0	16	220	13	350	0.28	0.90	0.34	0.31	0.25	0.39	0.27	4538	4975	5275
MS18 or MS18 MOD	7900	600	650	400	275	19	200	19	170	22	350	22	350	19	190	19	170	22	180	16	300	0	16	200	13	350	0.28	0.90	0.34	0.31	0.25	0.39	0.26	4538	5025	5325
MS18 or MS18 MOD	8400	600	675	425	275	19	190	19	170	22	330	22	330	19	180	19	180	22	180	16	300	0	16	220	13	350	0.29	0.90	0.34	0.31	0.25	0.39	0.26	4550	5050	5350
MS18 or MS18 MOD	8875	625	700	425	275	19	190	19	170	22	330	22	330	19	180	19	170	22	180	16	300	0	16	200	13	350	0.28	0.89	0.33	0.31	0.26	0.38	0.26	4550	5100	5400
MS18 or MS18 MOD	9350	650	700	425	275	19	190	19	160	22	340	22	340	19	180	19	160	22	170	16	300	0	16	190	13	350	0.28	0.89	0.33	0.31	0.26	0.38	0.26	4550	5125	5425

SPAN (S) = 4.2 m
HT (m) = 4.5 or 4.8

Loading	DESIGN FILL (mm)	TS Thick	BS Thick.	TX Thick	TI Thick.	A1 Size	A1 Bars c to c	J3 Size	J3 Bars c to c	H1 Size	H1 Bars c to c	H2 Size	H2 Bars c to c	A2 Size	A2 Bars c to c	J4 Size	J4 Bars c to c	H3 Size	H3 Bars c to c	B1 Size	B1 Bars c to c	G1	B2 Size	B2 Bars c to c	F Size	F Bars c to c	J4: C4	J4: K3	H3: C7	J3: C1	J3: K2	H1: C5	H2: C6	"C" Multiplier S = 4.2 m (mm)	"K" Multiplier HT = 4.5 m (mm)	"K" Multiplier HT = 4.8 m (mm)
MS18	200	300	300	300	300	19	180	19	210	19	320	19	320	16	180	22	160	22	180	16	300	300	16	180	13	350	0.49	0.95	0.44	0.41	0.20	0.79	0.30	4500	4975	5275
MS18	700	300	325	300	300	19	170	19	180	22	360	22	360	19	220	22	190	22	170	16	300	300	16	250	13	350	0.45	0.95	0.43	0.41	0.20	0.82	0.29	4500	5000	5300
MS18	1225	275	300	300	300	19	220	19	190	22	390	22	390	16	160	22	200	22	170	16	300	300	16	230	13	350	0.41	0.96	0.39	0.43	0.19	0.45	0.27	4500	4950	5250
MS18	1725	275	325	300	300	16	160	19	180	22	360	22	360	19	220	19	160	22	160	16	300	300	16	220	13	350	0.37	0.96	0.38	0.39	0.19	0.41	0.25	4500	4975	5275
MS18	2200	300	350	300	300	16	160	19	180	22	370	22	370	19	220	19	160	22	190	16	300	0	16	200	13	350	0.36	0.95	0.37	0.37	0.20	0.40	0.25	4500	5025	5325
MS18 MOD	150	350	325	300	300	19	170	19	200	22	400	22	400	16	160	22	160	22	160	16	300	300	19	190	13	350	0.50	0.94	0.44	0.41	0.20	0.82	0.36	4500	5025	5350
MS18 MOD	675	325	350	300	300	19	160	19	170	22	330	22	330	19	200	22	170	22	160	16	300	300	16	250	13	350	0.45	0.95	0.45	0.41	0.20	0.82	0.30	4500	5050	5350
MS18 MOD	1225	275	325	300	300	19	190	19	180	22	350	22	350	19	220	19	160	22	180	16	300	300	16	230	13	350	0.39	0.96	0.40	0.44	0.19	0.47	0.27	4500	4975	5275
MS18 MOD	1700	300	350	300	300	19	220	19	180	22	360	22	360	16	160	19	160	22	190	16	300	300	16	220	13	350	0.38	0.95	0.38	0.40	0.20	0.43	0.26	4500	5025	5325
MS18 MOD	2200	300	375	300	300	19	220	19	170	22	350	22	350	19	220	19	160	22	200	16	300	0	16	200	13	350	0.36	0.95	0.37	0.37	0.19	0.41	0.25	4500	5050	5350
MS18 or MS18 MOD	2675	325	400	300	300	16	160	19	160	22	370	22	370	19	210	19	160	22	180	16	300	0	16	190	13	350	0.35	0.95	0.36	0.36	0.20	0.38	0.24	4500	5075	5400
MS18 or MS18 MOD	3150	350	425	325	300	16	160	19	170	22	370	22	370	19	210	19	160	22	180	16	300	0	16	200	13	350	0.35	0.95	0.35	0.35	0.20	0.38	0.24	4513	5125	5450
MS18 or MS18 MOD	3625	375	450	350	300	16	160	19	180	22	370	22	370	19	210	19	170	22	190	16	300	0	16	210	13	350	0.34	0.94	0.35	0.37	0.20	0.40	0.27	4525	5175	5500
MS18 or MS18 MOD	4100	400	450	350	300	16	160	19	160	22	370	22	370	19	200	22	210	22	190	16	300	0	16	190	13	350	0.36	0.94	0.35	0.36	0.21	0.40	0.27	4525	5225	5525
MS18 or MS18 MOD	4575	425	475	375	300	16	160	19	170	22	370	22	370	19	200	19	160	22	190	16	300	0	16	200	13	350	0.33	0.93	0.35	0.36	0.21	0.40	0.27	4538	5275	5575
MS18 or MS18 MOD	5050	450	500	375	300	16	160	19	160	22	360	22	360	19	200	22	210	22	180	16	300	0	16	190	13	350	0.35	0.93	0.34	0.35	0.21	0.40	0.27	4538	5325	5625
MS18 or MS18 MOD	5525	475	525	400	300	19	220	19	160	22	360	22	360	19	190	22	210	22	180	16	300	0	16	190	13	350	0.35	0.93	0.34	0.35	0.22	0.39	0.27	4550	5375	5675
MS18 or MS18 MOD	6000	500	550	400	300	19	220	19	160	22	360	22	360	19	190	22	200	22	180	16	300	0	16	180	13	350	0.34	0.92	0.34	0.35	0.22	0.39	0.27	4550	5425	5725
MS18 or MS18 MOD	6475	525	575	425	300	19	220	19	160	22	360	22	360	19	190	22	210	22	180	16	300	0	16	180	13	350	0.34	0.92	0.34	0.35	0.22	0.39	0.27	4563	5475	5775
MS18 or MS18 MOD	6950	550	600	425	300	19	210	22	210	22	360	22	360	19	190	22	200	22	180	16	300	0	16	180	13	350	0.34	0.91	0.34	0.37	0.24	0.39	0.27	4563	5525	5825
MS18 or MS18 MOD	7425	575	625	450	300	19	210	19	160	22	360	22	360	19	190	22	210	22	180	16	300	0	16	180	13	350	0.34	0.91	0.34	0.35	0.23	0.39	0.27	4575	5575	5875
MS18 or MS18 MOD	7900	600	650	450	300	19	210	22	210	22	360	22	360	19	180	22	200	22	180	16	300	0	16	170	13	350	0.34	0.91	0.34	0.37	0.25	0.38	0.26	4575	5625	5925
MS18 or MS18 MOD	8400	600	675	475	300	19	200	22	210	22	340	22	340	19	180	22	210	22	180	16	300	0	16	180	13	350	0.34	0.91	0.33	0.38	0.25	0.38	0.26	4588	5650	5950
MS18 or MS18 MOD	8875	625	700	475	300	19	200	22	200	22	340	22	340	19	180	22	200	22	180	16	300	0	16	160	13	350	0.34	0.90	0.33	0.37	0.26	0.38	0.26	4588	5700	6000
MS18 or MS18 MOD	9350	650	700	500	300	19	200	22	210	22	350	22	350	19	170	22	200	22	170	16	300	0	16	170	13	350	0.34	0.90	0.33	0.38	0.25	0.38	0.26	4600	5725	6025

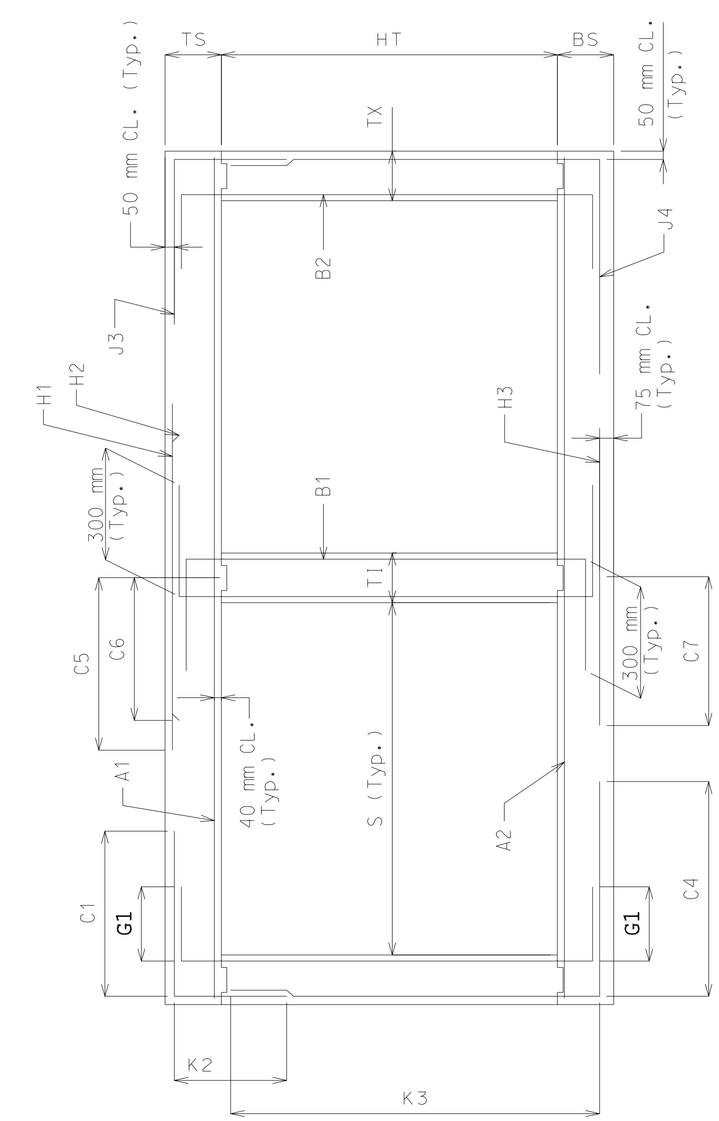

SECTION THRU BOX

NOTE: IF DESIGN FILL FALLS BETWEEN TABULATED FILLS, USE THE ADJACENT TABULATED FILL WHICH YIELDS THE GREATER MEMBER THICKNESS. IF THE MEMBER THICKNESSES ARE EQUAL, USE THE ADJACENT TABULATED FILL WHICH YIELDS THE GREATER AREA OF REINFORCEMENT.

SPECIAL DESIGNS ARE REQUIRED WHEN THE DESIGN FILL IS OUTSIDE THE RANGE OF TABULATED FILLS.

ALL DIMENSIONS ARE IN mm UNLESS OTHERWISE SPECIFIED.

COEFFICIENTS: DIMENSIONS MARKED WITH C# OR K# ARE THE PRODUCT OF THE COEFFICIENT AND ITS ASSOCIATED MULTIPLIER.

DESIGN FILL HEIGHT GIVEN IN THE TABLES IS THE HEIGHT FROM THE TOP OF THE EARTH FILL OR ROADWAY TO THE TOP OF THE TOP SLAB.

ALL CULVERTS MEET STRENGTH REQUIREMENTS FOR MILITARY 106 kN TANDEM AXLE LOADING.

MISSOURI HIGHWAY AND TRANSPORTATION COMMISSION

CONCRETE DOUBLE BOX CULVERT

MEMBER SIZES AND REINFORCEMENT

(MS18 & MS18 MOD LOADING)

DATE: EFFECTIVE: 04-01-2002 **M703.45B**

Span (S) = 4.5 m
HT (m) = 3.6 or 3.9 or 4.2

	DESIGN FILL	MEMBER THICKNESSES				TOP SLAB BARS								BOTTOM SLAB BARS						WALL BARS							COEFFICIENTS (see note)							"C" Multiplier	"K" Multiplier		
		TS	BS	TX	TI	A1	Bars	J3	Bars	H1	Bars	H2	Bars	A2	Bars	J4	Bars	H3	Bars	B1	Bars	B2 Bars			F	Bars	J4		H3	J3		H1	H2	S = 4.5 m	HT = 3.6 m	HT = 3.9 m	HT = 4.2 m
	(mm)	Thick	Thick.	Thick	Thick.	Size	c to c	Size	c to c	Size	c to c	Size	c to c	Size	c to c	Size	c to c	Size	c to c	Size	c to c	G1	Size	c to c	Size	c to c	C4	K3	C7	C1	K2	C5	C6	mm	mm	mm	mm
MS18	200	300	300	275	275	19	170	19	210	22	400	22	400	16	170	22	190	25	200	16	280	300	16	260	13	350	0.42	0.95	0.46	0.40	0.24	0.81	0.28	4775	4050	4375	4675
MS18	700	300	325	275	275	22	210	19	180	22	330	22	330	19	210	22	190	25	180	16	290	300	16	300	13	350	0.38	0.95	0.45	0.46	0.24	0.59	0.28	4775	4075	4400	4700
MS18	1225	275	300	275	275	19	190	19	190	22	350	22	350	19	220	19	170	25	200	16	300	300	16	300	13	350	0.32	0.95	0.42	0.36	0.23	0.44	0.26	4775	4050	4350	4650
MS18	1700	300	325	275	275	19	200	19	190	22	320	22	320	19	210	19	180	25	210	16	300	300	16	300	13	350	0.30	0.95	0.41	0.33	0.23	0.41	0.25	4775	4075	4400	4675
MS18	2200	300	375	275	275	19	200	19	180	22	320	22	320	19	200	19	180	22	160	16	300	0	16	300	13	350	0.29	0.95	0.36	0.30	0.24	0.39	0.24	4775	4125	4425	4750
MS18 MOD	150	350	325	275	275	19	160	19	210	22	390	22	390	16	160	22	200	25	200	16	300	300	16	220	13	350	0.42	0.94	0.47	0.40	0.25	0.81	0.28	4775	4125	4450	4750
MS18 MOD	650	350	350	275	275	22	200	19	180	22	320	22	320	19	200	22	180	25	200	16	300	300	16	250	13	350	0.37	0.94	0.47	0.47	0.25	0.81	0.30	4775	4175	4475	4775
MS18 MOD	1200	300	325	275	275	19	180	19	190	22	340	22	340	19	220	19	160	22	160	16	300	300	16	300	13	350	0.32	0.95	0.40	0.37	0.24	0.47	0.26	4775	4100	4400	4700
MS18 MOD	1700	300	350	275	275	19	190	19	180	22	320	22	320	19	210	19	170	22	170	16	300	300	16	300	13	350	0.30	0.95	0.38	0.33	0.24	0.43	0.25	4775	4125	4425	4725
MS18 MOD	2175	325	375	275	275	19	200	19	180	22	330	22	330	19	210	19	170	22	170	16	300	0	16	300	13	350	0.29	0.94	0.37	0.30	0.24	0.40	0.24	4775	4175	4475	4775
MS18 or MS18 MOD	2650	350	400	275	275	19	210	19	170	22	350	22	350	19	200	19	180	22	170	16	300	0	16	270	13	350	0.28	0.94	0.36	0.29	0.24	0.38	0.23	4775	4225	4525	4825
MS18 or MS18 MOD	3125	375	425	275	275	19	210	19	160	22	340	22	340	19	200	19	160	22	170	16	300	0	16	250	13	350	0.28	0.93	0.36	0.30	0.25	0.40	0.26	4775	4275	4575	4875
MS18 or MS18 MOD	3600	400	450	300	275	19	210	19	180	22	340	22	340	19	190	19	170	22	170	16	300	0	16	270	13	350	0.27	0.93	0.35	0.30	0.25	0.40	0.26	4788	4325	4625	4925
MS18 or MS18 MOD	4075	425	475	300	275	19	210	19	170	22	340	22	340	19	190	19	160	22	170	16	300	0	16	240	13	350	0.27	0.92	0.35	0.29	0.25	0.39	0.26	4788	4375	4675	4975
MS18 or MS18 MOD	4550	450	500	325	275	19	200	19	180	22	330	22	330	19	190	19	170	22	170	16	300	0	16	250	13	350	0.27	0.92	0.35	0.29	0.25	0.39	0.26	4800	4425	4725	5025
MS18 or MS18 MOD	5025	475	525	325	275	19	200	19	170	22	330	22	330	19	180	19	160	22	170	16	300	0	16	240	13	350	0.26	0.92	0.34	0.29	0.26	0.39	0.26	4800	4475	4775	5075
MS18 or MS18 MOD	5500	500	550	350	275	19	200	19	180	22	320	22	320	19	180	19	170	22	170	16	300	0	16	240	13	350	0.27	0.91	0.34	0.29	0.26	0.39	0.26	4813	4525	4825	5125
MS18 or MS18 MOD	5975	525	575	350	275	19	190	19	170	22	320	22	320	19	180	19	160	22	160	16	300	0	16	220	13	350	0.26	0.91	0.34	0.29	0.26	0.39	0.26	4813	4575	4875	5175
MS18 or MS18 MOD	6450	550	625	375	275	19	190	19	170	22	320	22	320	19	180	19	180	22	160	16	300	0	16	230	13	350	0.26	0.90	0.34	0.29	0.27	0.39	0.26	4825	4625	4925	5250
MS18 or MS18 MOD	6925	575	625	375	275	19	190	19	170	22	320	22	320	19	170	19	160	22	160	16	300	0	16	220	13	350	0.26	0.90	0.34	0.29	0.27	0.38	0.26	4825	4675	4975	5275
MS18 or MS18 MOD	7400	600	675	400	275	19	180	19	170	22	310	22	310	19	170	19	180	22	160	16	300	0	16	220	13	350	0.26	0.90	0.34	0.29	0.27	0.38	0.26	4838	4725	5025	5350
MS18 or MS18 MOD	7875	625	675	400	275	19	180	19	170	22	310	22	310	19	170	19	170	22	160	16	300	0	16	210	13	350	0.26	0.89	0.34	0.29	0.27	0.38	0.26	4838	4775	5075	5375
MS18 or MS18 MOD	8350	650	700	425	275	19	180	19	170	22	310	22	310	19	170	19	170	22	160	16	300	0	16	220	13	350	0.26	0.89	0.34	0.29	0.28	0.38	0.25	4850	4825	5125	5425
MS18 or MS18 MOD	8825	675	725	425	275	19	180	19	170	22	310	22	310	19	160	19	170	22	160	16	300	0	16	200	13	350	0.26	0.89	0.33	0.29	0.28	0.38	0.25	4850	4875	5175	5475
MS18 or MS18 MOD	9300	700	750	425	275	19	170	19	160	22	310	22	310	19	160	19	160	22	160	16	300	0	16	190	13	350	0.26	0.88	0.33	0.29	0.28	0.37	0.25	4850	4925	5225	5525

SPAN (S) = 4.5 m
HT (m) = 4.5 or 4.8

	DESIGN FILL	MEMBER THICKNESSES				TOP SLAB BARS								BOTTOM SLAB BARS						WALL BARS							COEFFICIENTS (see note)							"C" Multiplier	"K" Multiplier	
		TS	BS	TX	TI	A1	Bars	J3	Bars	H1	Bars	H2	Bars	A2	Bars	J4	Bars	H3	Bars	B1	Bars	B2 Bars			F	Bars	J4		H3	J3		H1	H2	S = 4.5 m	HT = 4.5 m	HT = 4.8 m
	(mm)	Thick	Thick.	Thick	Thick.	Size	c to c	Size	c to c	Size	c to c	Size	c to c	Size	c to c	Size	c to c	Size	c to c	Size	c to c	G1	Size	c to c	Size	c to c	C4	K3	C7	C1	K2	C5	C6	mm	mm	mm
MS18	200	300	300	300	300	19	170	19	200	22	400	22	400	16	170	22	170	22	160	16	300	300	16	270	13	350	0.46	0.95	0.43	0.41	0.20	0.81	0.27	4800	4975	5275
MS18	700	300	325	300	300	22	210	19	170	22	330	22	330	19	210	22	180	25	200	16	300	300	16	250	13	350	0.42	0.95	0.45	0.41	0.20	0.81	0.28	4800	5000	5300
MS18	1225	275	325	300	300	19	200	19	180	22	350	22	350	19	220	19	160	22	170	16	300	300	16	240	13	350	0.37	0.96	0.39	0.40	0.19	0.44	0.26	4800	4975	5275
MS18	1700	300	350	300	300	19	200	19	170	22	320	22	320	19	210	19	160	22	180	16	300	300	16	230	13	350	0.35	0.96	0.37	0.37	0.20	0.41	0.25	4800	5025	5300
MS18	2200	300	375	300	300	19	200	19	160	22	320	22	320	19	210	19	160	22	190	16	300	0	16	220	13	350	0.34	0.95	0.36	0.35	0.19	0.39	0.24	4800	5050	5350
MS18 MOD	150	350	325	300	300	19	160	19	190	22	390	22	390	16	160	22	180	22	160	16	300	300	16	220	13	350	0.47	0.94	0.44	0.41	0.20	0.81	0.29	4800	5050	5350
MS18 MOD	650	350	350	300	300	22	200	19	170	22	330	22	330	19	200	22	180	25	200	16	300	300	16	260	13	350	0.42	0.94	0.46	0.41	0.20	0.81	0.30	4800	5075	5375
MS18 MOD	1200	300	325	300	300	19	180	19	180	22	340	22	340	19	210	22	200	25	200	16	300	300	16	240	13	350	0.39	0.95	0.42	0.41	0.20	0.47	0.26	4800	5000	5300
MS18 MOD	1700	300	350	300	300	19	190	19	170	22	320	22	320	19	200	22	210	22	160	16	300	300	16	230	13	350	0.37	0.95	0.38	0.37	0.20	0.42	0.25	4800	5025	5325
MS18 MOD	2175	325	375	300	300	19	200	19	160	22	330	22	330	19	200	22	210	22	170	16	300	0	16	220	13	350	0.36	0.95	0.37	0.35	0.20	0.40	0.24	4800	5075	5375
MS18 or MS18 MOD	2650	350	400	300	300	19	210	22	210	22	360	22	360	19	200	22	200	22	170	16	300	0	16	200	13	350	0.35	0.95	0.36	0.35	0.22	0.38	0.23	4800	5125	5425
MS18 or MS18 MOD	3125	375	425	325	300	19	210	19	160	22	350	22	350	19	190	19	160	22	170	16	300	0	16	210	13	350	0.32	0.94	0.35	0.34	0.20	0.40	0.26	4813	5175	5475
MS18 or MS18 MOD	3600	400	450	350	300	19	210	19	170	22	340	22	340	19	190	19	160	22	170	16	300	0	16	220	13	350	0.31	0.94	0.34	0.34	0.21	0.39	0.26	4825	5225	5525
MS18 or MS18 MOD	4075	425	475	350	300	19	210	19	160	22	340	22	340	19	190	22	210	22	170	16	300	0	16	200	13	350	0.33	0.93	0.34	0.33	0.21	0.39	0.26	4825	5275	5575
MS18 or MS18 MOD	4550	450	525	375	300	19	210	19	160	22	340	22	340	19	190	19	160	22	170	16	300	0	16	200	13	350	0.30	0.93	0.34	0.33	0.21	0.39	0.26	4838	5325	5650
MS18 or MS18 MOD	5025	475	550	375	300	19	200	19	160	22	330	22	330	19	180	22	210	22	170	16	300	0	16	190	13	350	0.32	0.93	0.34	0.33	0.22	0.39	0.26	4838	5375	5700
MS18 or MS18 MOD	5500	500	575	400	300	19	200	19	160	22	330	22	330	19	190	22	210	22	180	16	300	0	16	200	13	350	0.32	0.92	0.33	0.33	0.22	0.39	0.26	4850	5450	5750
MS18 or MS18 MOD	5975	525	600	400	300	19	200	22	210	22	330	22	330	19	180	22	200	22	180	16	300	0	16	180	13	350	0.32	0.92	0.33	0.35	0.24	0.39	0.26	4850	5500	5800
MS18 or MS18 MOD	6450	550	625	425	300	19	200	19	160	22	320	22	320	19	180	22	210	22	170	16	300	0	16	190	13	350	0.32	0.92	0.33	0.33	0.22	0.38	0.26	4863	5550	5850
MS18 or MS18 MOD	6925	575	650	425	300	19	190	22	200	22	320	22	320	19	180	22	200	22	170	16	300	0	16	180	13	350	0.32	0.91	0.33	0.35	0.24	0.38	0.26	4863	5600	5900
MS18 or MS18 MOD	7400	600	675	450	300	19	190	22	210	22	320	22	320	19	170	22	210	22	170	16	300	0	16	180	13	350	0.32	0.91	0.33	0.35	0.25	0.38	0.26	4875	5650	5950
MS18 or MS18 MOD	7875	625	700	450	300	19	190	22	200	22	320	22	320	19	170	22	200	22	170	16	300	0	16	170	13	350	0.32	0.90	0.33	0.35	0.26	0.38	0.26	4875	5700	6000
MS18 or MS18 MOD	8350	650	725	475	300	19	180	22	210	22	320	22	320	19	170	22	200	22	160	16	300	0	16	180	13	350	0.32	0.90	0.33	0.35	0.25	0.37	0.25	4888	5725	6050
MS18 or MS18 MOD	8825	675	725	475	300	19	180	22	200	22	320	22	320	19	160	22	200	22	160	16	300	0	16	170	13	350	0.32	0.90	0.33	0.35	0.25	0.37	0.25	4888	5775	6075
MS18 or MS18 MOD	9300	700	750	500	300	19	180	22	200	22	320	22	320	19	160	22	200	22	160	16	300	0	16	170	13	350	0.32	0.89	0.32	0.35	0.26	0.37	0.25	4900	5825	6125

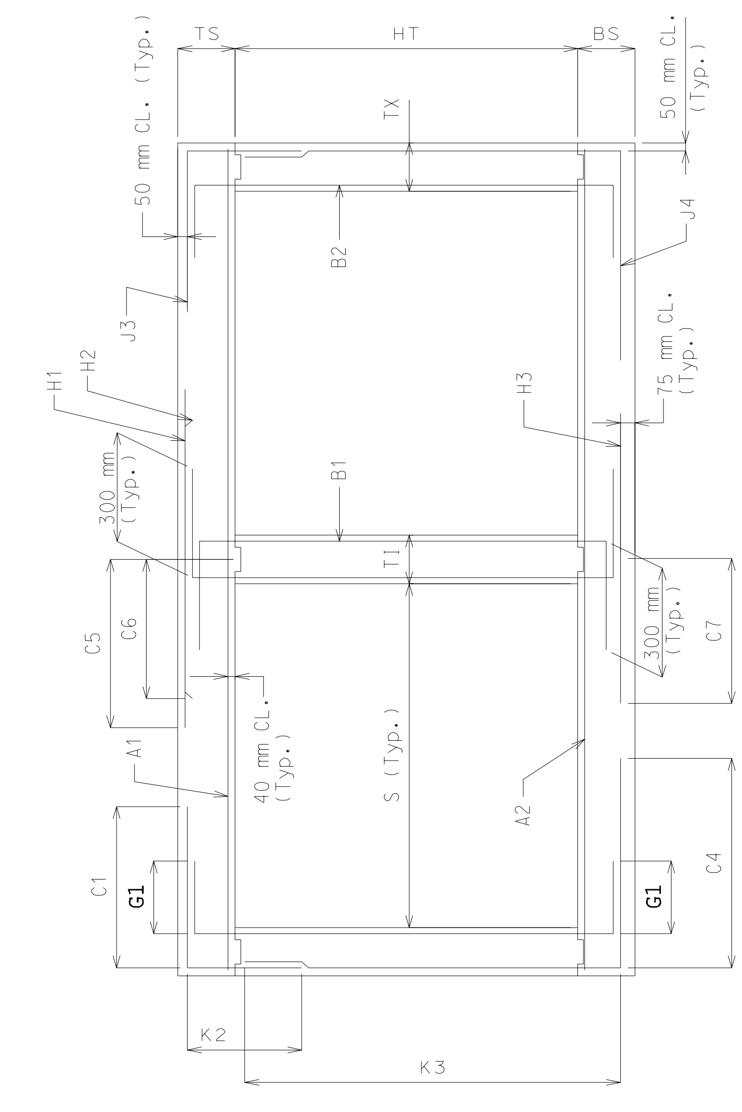

SECTION THRU BOX

NOTE: IF DESIGN FILL FALLS BETWEEN TABULATED FILLS, USE THE ADJACENT TABULATED FILL WHICH YIELDS THE GREATER MEMBER THICKNESS. IF THE MEMBER THICKNESSES ARE EQUAL, USE THE ADJACENT TABULATED FILL WHICH YIELDS THE GREATER AREA OF REINFORCEMENT.

SPECIAL DESIGNS ARE REQUIRED WHEN THE DESIGN FILL IS OUTSIDE THE RANGE OF TABULATED FILLS.

ALL DIMENSIONS ARE IN mm UNLESS OTHERWISE SPECIFIED.

COEFFICIENTS: DIMENSIONS MARKED WITH C# OR K# ARE THE PRODUCT OF THE COEFFICIENT AND ITS ASSOCIATED MULTIPLIER.

DESIGN FILL HEIGHT GIVEN IN THE TABLES IS THE HEIGHT FROM THE TOP OF THE EARTH FILL OR ROADWAY TO THE TOP OF THE TOP SLAB.

ALL CULVERTS MEET STRENGTH REQUIREMENTS FOR MILITARY 106 kN TANDEM AXLE LOADING.

MISSOURI HIGHWAY AND TRANSPORTATION COMMISSION

CONCRETE DOUBLE BOX CULVERT

MEMBER SIZES AND REINFORCEMENT

(MS18 & MS18 MOD LOADING)

DATE: EFFECTIVE: 04-01-2002 **M703.45B**

	DESIGN FILL	MEMBER THICKNESSES				Span (S) = 4.8 m; HT (m) = 3.9 or 4.2																															
						TOP SLAB BARS								BOTTOM SLAB BARS						WALL BARS								COEFFICIENTS (see note)								"C" Multiplier	"K" Multiplier	
		TS	BS	TX	TI	A1	Bars	J3	Bars	H1	Bars	H2	Bars	A2	Bars	J4	Bars	H3	Bars	B1	Bars	B2	Bars		F	Bars	J4		H3		J3		H1		H2		S = 4.8 m	HT = 3.9 m	HT = 4.2 m
	(mm)	Thick	Thick.	Thick	Thick.	Size	c to c	Size	c to c	Size	c to c	Size	c to c	Size	c to c	Size	c to c	Size	c to c	Size	c to c	G1	Size	c to c	Size	c to c	C4	K3	C7		C1	K2	C5		C6		mm	mm	mm
MS18	200	300	300	275	275	19	160	19	200	22	380	22	380	16	160	22	200	25	200	16	280	300	16	250	13	350	0.40	0.95	0.45		0.40	0.22	0.80		0.27		5075	4375	4675
MS18	675	325	325	275	275	22	200	19	180	25	400	25	400	19	190	22	180	25	190	16	270	300	16	280	13	350	0.36	0.95	0.44		0.41	0.23	0.58		0.30		5075	4425	4700
MS18	1200	300	325	275	275	19	190	19	190	22	340	22	340	19	210	19	160	22	160	16	300	300	16	300	13	350	0.30	0.95	0.38		0.34	0.22	0.44		0.25		5075	4400	4700
MS18	1700	300	350	275	275	19	190	19	180	22	310	22	310	19	200	19	170	22	160	16	300	300	16	300	13	350	0.29	0.95	0.37		0.30	0.22	0.40		0.24		5075	4425	4725
MS18	2175	325	375	275	275	19	190	19	180	22	310	22	310	19	190	19	170	22	160	16	300	0	16	300	13	350	0.27	0.94	0.36		0.28	0.22	0.39		0.23		5075	4475	4775
MS18 MOD	150	350	325	275	275	22	200	19	190	22	380	22	380	16	170	22	210	25	200	16	290	300	16	200	13	350	0.40	0.94	0.47		0.40	0.23	0.80		0.27		5075	4450	4750
MS18 MOD	650	350	350	275	275	22	190	19	170	25	390	25	390	19	180	22	170	25	180	16	280	300	16	220	13	350	0.35	0.94	0.46		0.49	0.23	0.73		0.32		5075	4475	4775
MS18 MOD	1200	300	350	275	275	19	160	19	180	25	400	25	400	19	190	22	200	25	180	16	300	300	16	300	13	350	0.32	0.95	0.42		0.34	0.22	0.49		0.29		5075	4400	4725
MS18 MOD	1675	325	375	275	275	19	180	19	180	22	310	22	310	19	190	19	160	25	190	16	300	300	16	300	13	350	0.28	0.94	0.41		0.31	0.23	0.42		0.24		5075	4450	4775
MS18 MOD	2150	350	400	275	275	19	180	19	170	25	390	25	390	19	190	19	170	22	160	16	300	0	16	300	13	350	0.27	0.94	0.37		0.29	0.23	0.42		0.27		5075	4525	4800
MS18 or MS18 MOD	2650	350	425	275	275	19	180	19	160	22	310	22	310	19	190	19	170	22	170	16	300	0	16	290	13	350	0.26	0.94	0.36		0.27	0.23	0.38		0.22		5075	4550	4850
MS18 or MS18 MOD	3125	375	450	275	275	19	180	19	160	25	390	25	390	19	180	19	160	22	160	16	300	0	16	260	13	350	0.26	0.93	0.35		0.29	0.23	0.40		0.26		5075	4600	4900
MS18 or MS18 MOD	3575	425	475	300	275	19	200	19	170	22	320	22	320	19	180	19	170	22	160	16	300	0	16	270	13	350	0.25	0.92	0.34		0.28	0.24	0.39		0.25		5088	4675	4975
MS18 or MS18 MOD	4050	450	500	300	275	19	190	19	160	22	310	22	310	19	180	19	160	22	160	16	300	0	16	250	13	350	0.25	0.92	0.34		0.27	0.24	0.39		0.25		5088	4725	5025
MS18 or MS18 MOD	4525	475	525	325	275	19	190	19	170	22	310	22	310	19	170	19	170	22	160	16	300	0	16	260	13	350	0.25	0.92	0.34		0.27	0.24	0.38		0.25		5100	4775	5075
MS18 or MS18 MOD	5000	500	575	325	275	19	190	19	160	25	400	25	400	19	170	19	170	25	200	16	300	0	16	240	13	350	0.24	0.91	0.37		0.27	0.24	0.44		0.31		5100	4825	5150
MS18 or MS18 MOD	5475	525	600	350	275	19	180	19	170	25	390	25	390	19	170	19	170	22	160	16	300	0	16	250	13	350	0.24	0.91	0.33		0.27	0.25	0.44		0.30		5113	4900	5200
MS18 or MS18 MOD	5950	550	625	350	275	19	180	19	160	25	390	25	390	19	170	19	170	22	160	16	300	0	16	230	13	350	0.24	0.90	0.33		0.27	0.25	0.43		0.30		5113	4950	5250
MS18 or MS18 MOD	6425	575	650	375	275	19	180	19	170	25	380	25	380	19	170	19	170	22	160	16	300	0	16	240	13	350	0.24	0.90	0.33		0.27	0.25	0.43		0.30		5125	5000	5300
MS18 or MS18 MOD	6900	600	675	375	275	19	170	19	160	25	380	25	380	19	160	19	170	22	160	16	300	0	16	220	13	350	0.24	0.90	0.33		0.27	0.25	0.43		0.30		5125	5050	5350
MS18 or MS18 MOD	7375	625	700	400	275	19	170	19	170	25	380	25	380	19	160	19	170	25	200	16	300	0	16	230	13	350	0.24	0.89	0.36		0.27	0.26	0.43		0.30		5138	5100	5400
MS18 or MS18 MOD	7850	650	725	400	275	19	170	19	160	25	370	25	370	19	160	19	170	25	200	16	300	0	16	220	13	350	0.24	0.89	0.36		0.27	0.26	0.43		0.30		5138	5150	5450
MS18 or MS18 MOD	8325	675	750	425	275	19	170	19	170	25	370	25	370	19	160	19	170	25	200	16	300	0	16	220	13	350	0.24	0.89	0.36		0.27	0.26	0.43		0.30		5150	5200	5500
MS18 or MS18 MOD	8800	700	775	425	275	19	160	19	160	25	370	25	370	22	210	19	170	25	200	16	300	0	16	210	13	350	0.24	0.88	0.35		0.27	0.26	0.42		0.30		5150	5250	5550
MS18 or MS18 MOD	9275	725	800	425	275	19	160	19	160	25	370	25	370	22	210	19	170	25	200	16	300	0	16	190	13	350	0.24	0.88	0.35		0.27	0.27	0.42		0.30		5150	5300	5600

	DESIGN FILL	MEMBER THICKNESSES				SPAN (S) = 4.8 m; HT (m) = 4.5 or 4.8																															
						TOP SLAB BARS								BOTTOM SLAB BARS						WALL BARS								COEFFICIENTS (see note)								"C" Multiplier	"K" Multiplier	
		TS	BS	TX	TI	A1	Bars	J3	Bars	H1	Bars	H2	Bars	A2	Bars	J4	Bars	H3	Bars	B1	Bars	B2	Bars		F	Bars	J4		H3		J3		H1		H2		S = 4.8 m	HT = 4.5 m	HT = 4.8 m
	(mm)	Thick	Thick.	Thick	Thick.	Size	c to c	Size	c to c	Size	c to c	Size	c to c	Size	c to c	Size	c to c	Size	c to c	Size	c to c	G1	Size	c to c	Size	c to c	C4	K3	C7		C1	K2	C5		C6		mm	mm	mm
MS18	200	300	325	300	300	19	160	19	190	22	370	22	370	16	160	22	190	25	200	16	290	300	16	260	13	350	0.44	0.95	0.45		0.40	0.20	0.80		0.27		5100	4975	5300
MS18	675	325	350	300	300	22	210	19	170	22	320	22	320	19	190	22	170	25	180	16	300	300	16	260	13	350	0.40	0.95	0.43		0.50	0.20	0.59		0.28		5100	5025	5350
MS18	1200	300	325	300	300	19	190	19	180	22	340	22	340	19	200	22	200	25	200	16	300	300	16	250	13	350	0.36	0.95	0.41		0.38	0.20	0.44		0.25		5100	5000	5300
MS18	1700	300	350	300	300	19	190	19	170	22	310	22	310	19	190	22	210	22	160	16	300	300	16	240	13	350	0.35	0.95	0.37		0.35	0.20	0.40		0.24		5100	5025	5325
MS18	2175	325	375	300	300	19	190	19	160	22	310	22	310	19	190	22	200	22	160	16	300	0	16	230	13	350	0.33	0.95	0.36		0.32	0.20	0.39		0.24		5100	5075	5375
MS18 MOD	150	350	325	300	300	22	200	19	180	22	380	22	380	16	160	22	180	25	190	16	300	300	16	210	13	350	0.44	0.94	0.46		0.40	0.20	0.80		0.27		5100	5050	5350
MS18 MOD	650	350	350	300	300	22	190	19	160	25	390	25	390	19	180	22	160	25	180	16	290	300	16	230	13	350	0.40	0.94	0.45		0.40	0.20	0.83		0.32		5100	5075	5375
MS18 MOD	1200	300	350	300	300	19	170	19	160	25	400	25	400	19	200	22	190	22	160	16	300	300	16	250	13	350	0.37	0.95	0.39		0.38	0.20	0.49		0.29		5100	5025	5325
MS18 MOD	1675	325	375	300	300	19	180	19	160	22	310	22	310	19	200	22	200	22	160	16	300	300	16	240	13	350	0.35	0.95	0.37		0.35	0.20	0.43		0.25		5100	5075	5375
MS18 MOD	2175	325	400	300	300	19	180	22	210	25	380	25	380	19	190	22	200	22	170	16	300	0	16	220	13	350	0.33	0.95	0.36		0.35	0.23	0.43		0.27		5100	5100	5400
MS18 or MS18 MOD	2650	350	425	300	300	19	190	22	200	22	310	22	310	19	190	22	200	22	170	16	300	0	16	210	13	350	0.32	0.95	0.35		0.33	0.22	0.38		0.23		5100	5150	5450
MS18 or MS18 MOD	3125	375	450	325	300	19	190	22	210	25	400	25	400	19	180	22	210	22	160	16	300	0	16	220	13	350	0.31	0.94	0.35		0.35	0.24	0.40		0.26		5113	5200	5500
MS18 or MS18 MOD	3575	425	475	350	300	19	190	19	160	25	390	25	390	19	180	19	160	22	160	16	300	0	16	230	13	350	0.29	0.94	0.34		0.32	0.21	0.44		0.31		5125	5275	5550
MS18 or MS18 MOD	4050	450	525	350	300	19	200	22	210	22	320	22	320	19	180	22	210	22	160	16	300	0	16	200	13	350	0.31	0.93	0.34		0.33	0.23	0.38		0.25		5125	5325	5650
MS18 or MS18 MOD	4525	475	550	375	300	19	190	19	160	22	310	22	310	19	180	22	210	22	170	16	300	0	16	220	13	350	0.30	0.93	0.33		0.31	0.21	0.38		0.25		5138	5400	5700
MS18 or MS18 MOD	5000	500	575	375	300	19	190	22	210	25	400	25	400	19	170	22	200	22	170	16	300	0	16	200	13	350	0.30	0.92	0.33		0.33	0.24	0.44		0.31		5138	5450	5750
MS18 or MS18 MOD	5475	525	600	400	300	19	190	22	210	25	400	25	400	19	170	22	210	22	160	16	300	0	16	200	13	350	0.30	0.92	0.33		0.33	0.24	0.43		0.30		5150	5500	5800
MS18 or MS18 MOD	5950	550	625	400	300	19	180	22	200	25	390	25	390	19	170	22	200	22	160	16	300	0	16	190	13	350	0.30	0.92	0.33		0.33	0.25	0.43		0.30		5150	5550	5850
MS18 or MS18 MOD	6425	575	650	425	300	19	180	22	210	25	390	25	390	19	170	22	200	22	160	16	300	0	16	200	13	350	0.30	0.91	0.33		0.33	0.24	0.43		0.30		5163	5600	5900
MS18 or MS18 MOD	6900	600	675	425	300	19	180	22	200	25	380	25	380	19	160	22	200	22	160	16	300	0	16	180	13	350	0.30	0.91	0.33		0.33	0.26	0.43		0.30		5163	5650	5950
MS18 or MS18 MOD	7375	625	700	450	300	19	170	22	200	25	380	25	380	19	160	22	200	25	200	16	300	0	16	190	13	350	0.30	0.90	0.36		0.33	0.25	0.43		0.30		5175	5700	6000
MS18 or MS18 MOD	7850	650	725	450	300	19	170	22	200	25	380	25	380	19	160	22	200	25	200	16	300	0	16	180	13	350	0.30	0.90	0.35		0.32	0.26	0.43		0.30		5175	5750	6050
MS18 or MS18 MOD	8325	675	750	475	300	19	170	22	200	25	380	25	380	22	210	22	200	25	200	16	300	0	16	180	13	350	0.30	0.90	0.35		0.33	0.25	0.42		0.30		5188	5800	6100
MS18 or MS18 MOD	8800	700	775	475	300	19	170	22	200	25	380	25	380	22	210	22	200	25	200	16	300	0	16	170	13	350	0.30	0.90	0.35		0.33	0.27	0.42		0.30		5188	5850	6150
MS18 or MS18 MOD	9275	725	800	500	300	19	160	22	200	25	370	25	370	22	210	22	200	25	200	16	300	0	16	180	13	350	0.30	0.89	0.35		0.33	0.27	0.42		0.30		5200	5900	6200

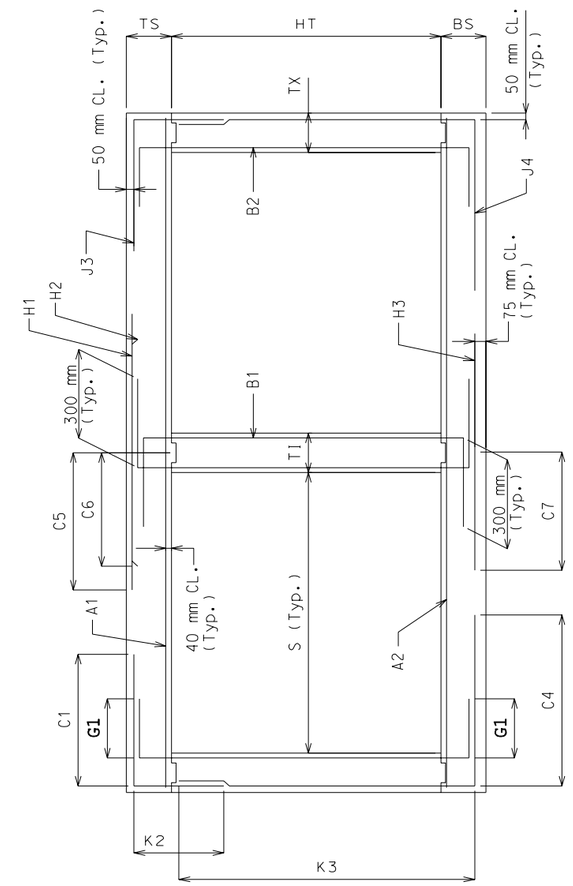

SECTION THRU BOX

NOTE: IF DESIGN FILL FALLS BETWEEN TABULATED FILLS, USE THE ADJACENT TABULATED FILL WHICH YIELDS THE GREATER MEMBER THICKNESS. IF THE MEMBER THICKNESSES ARE EQUAL, USE THE ADJACENT TABULATED FILL WHICH YIELDS THE GREATER AREA OF REINFORCEMENT.

SPECIAL DESIGNS ARE REQUIRED WHEN THE DESIGN FILL IS OUTSIDE THE RANGE OF TABULATED FILLS.

ALL DIMENSIONS ARE IN mm UNLESS OTHERWISE SPECIFIED.

COEFFICIENTS: DIMENSIONS MARKED WITH C# OR K# ARE THE PRODUCT OF THE COEFFICIENT AND ITS ASSOCIATED MULTIPLIER.

DESIGN FILL HEIGHT GIVEN IN THE TABLES IS THE HEIGHT FROM THE TOP OF THE EARTH FILL OR ROADWAY TO THE TOP OF THE TOP SLAB.

ALL CULVERTS MEET STRENGTH REQUIREMENTS FOR MILITARY 106 kN TANDEM AXLE LOADING.

MISSOURI HIGHWAY AND TRANSPORTATION COMMISSION

CONCRETE DOUBLE BOX CULVERT

MEMBER SIZES AND REINFORCEMENT

(MS18 & MS18 MOD LOADING)

DATE:	EFFECTIVE: 04-01-2002	M703.45B	13/13