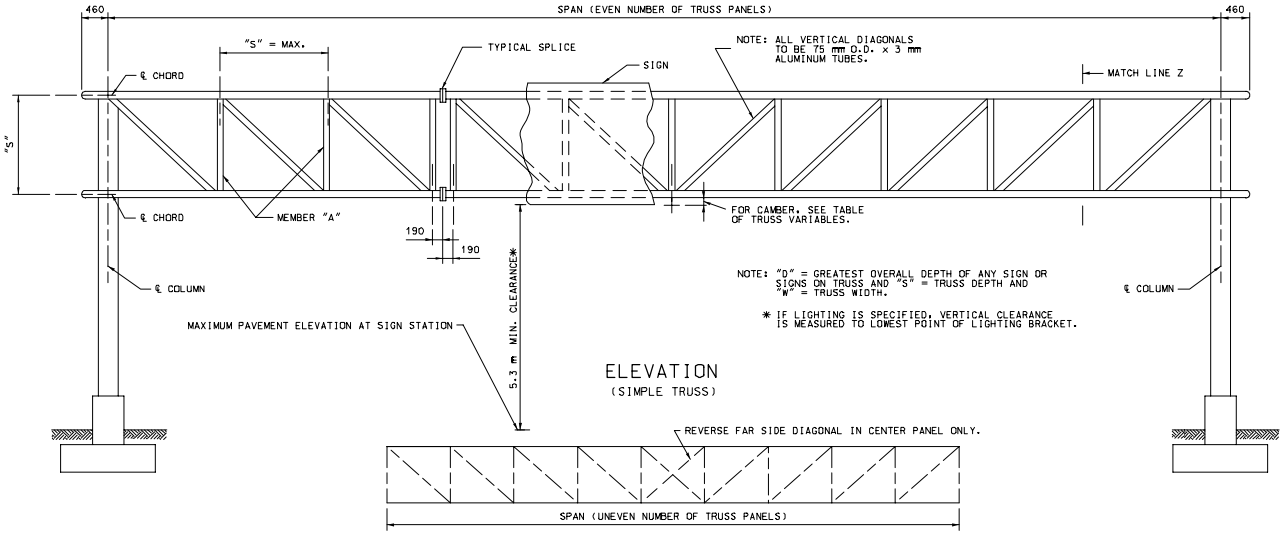

ELEVATION
(SIMPLE TRUSS)

TRUSS ELEVATION

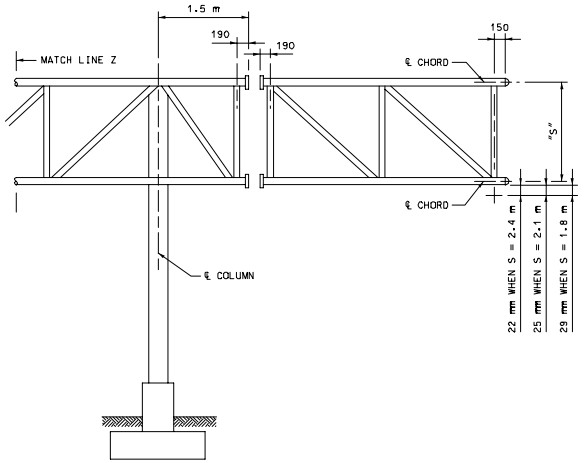

ELEVATION
(SIMPLE TRUSS MODIFIED FOR CANTILEVER SPAN)

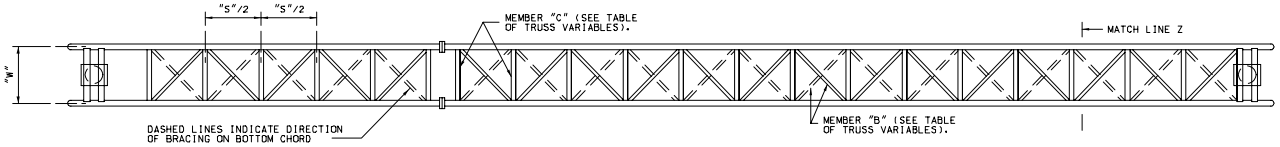

PLAN

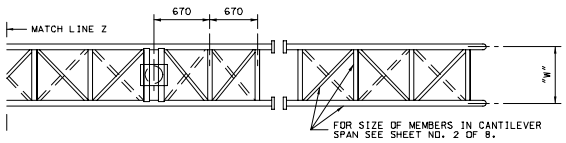

PLAN

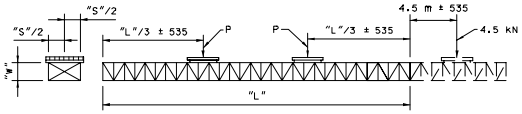

$$P = \frac{0.58aW}{L} - 0.29\,L \text{ WHERE}$$

P = CONCENTRATED LOAD IN kN.
a = AREA OF ONE CHORD TUBE IN mm². (USE 0.76a FOR 100 mm DIA. x 6 mm AND 115 mm DIA. x 6 mm CHORDS)
W = WIDTH OF TRUSS IN METERS.
L = SPAN LENGTH IN METERS.

SAMPLE. GIVEN: a = 2700 mm² . W = 1.8 m AND L = 30 m.

SOLUTION: $P = \frac{0.06 \times 2700 \times 1.8}{30} - 0.03 \times 30 = 9.7 - 0.9 = 8.8$ kN

NOTE: IF CANTILEVERED, REMOVE CONCENTRATED LOAD NEAREST CANTILEVER END AND LOAD CANTILEVER SPAN AS SHOWN ABOVE.

4.6 m OR LESS CANTILEVER SPANS NEED NOT BE TESTED.

REPEAT ABOVE TESTS BY ROTATING 180° (TO SIMULATE WIND REVERSAL).

NO VERTICAL LOAD (D.L.) TEST WILL BE REQUIRED.

LOADS P SHALL NOT BE MORE THAN 7.3 kN FOR SPANS LESS THAN 16.8 m AND 9.1 kN FOR ALL OTHERS.

SIMULATED WIND-SHOP TEST LOADING

GENERAL NOTES:

ALL DIMENSIONS SHOWN ARE IN mm UNLESS OTHERWISE NOTED.

ALL STRUCTURAL STEEL AND COLUMN BASE PLATES ASTM A36.

ALL ANCHOR BOLTS ASTM A307.

PROPOSED FIELD SPLICES SHALL BE SHOWN ON SHOP DRAWINGS FOR APPROVAL OF THE ENGINEER.

TRUSSES SHALL BE FABRICATED WITH A MINIMUM OF SPLICING IN TRUSS CHORDS.

FIELD SPLICING WILL NOT BE PERMITTED WITHIN THE MIDDLE ONE-THIRD OF SPAN.

PERMISSIBLE VENT HOLES (MAXIMUM 3 mm DIAMETER) SHALL BE PLACED A MINIMUM OF 75 mm FROM WELD ON LOW SIDE OF HORIZONTAL, VERTICAL AND DIAGONAL TUBES.

FOR ADDITIONAL INFORMATION SEE DATA SHEET.

TRUSS VARIABLES

SPAN (mm)	"S" (mm)	"W" (mm)	MEMBER "A"	MEMBER "B"	MEMBER "C"	SHOP CAMBER (mm)
≤ 21.5	1829	1525	64 mm DIA. x 3.1 mm	64 mm DIA. x 3.1 mm	44 mm DIA. x 3.1 mm	19
21.5 TO 24.5	1829	1830	64 mm DIA. x 3.1 mm	64 mm DIA. x 3.1 mm	51 mm DIA. x 3.1 mm	32
24.6 TO 27.6	1829	1830	64 mm DIA. x 3.1 mm	70 mm DIA. x 3.1 mm	51 mm DIA. x 3.1 mm	38
27.7 TO 30.6	1829	1830	64 mm DIA. x 3.1 mm	70 mm DIA. x 3.1 mm	51 mm DIA. x 3.1 mm	57
30.7 TO 33.7	2134	2135	64 mm DIA. x 3.1 mm	75 mm DIA. x 3.1 mm	57 mm DIA. x 3.1 mm	64
33.8 TO 36.8	2134	2135	64 mm DIA. x 3.1 mm	89 mm DIA. x 3.1 mm	57 mm DIA. x 3.1 mm	70
36.9 TO 39.8	2134	2135	75 mm DIA. x 3.1 mm	89 mm DIA. x 3.1 mm	57 mm DIA. x 3.1 mm	95
39.9 TO 42.8	2438	2135	75 mm DIA. x 3.1 mm	95 mm DIA. x 3.1 mm	64 mm DIA. x 3.1 mm	76
42.9 TO 45.9	2438	2135	75 mm DIA. x 3.1 mm	95 mm DIA. x 3.1 mm	70 mm DIA. x 3.1 mm	95
46.0 TO 48.9	2438	2135	75 mm DIA. x 3.1 mm	95 mm DIA. x 3.1 mm	70 mm DIA. x 3.1 mm	114

NOTE: FOR SIZE OF CHORD MEMBERS, SEE DATA SHEET.

SHOP CAMBER MAY BE PARABOLIC OR STRAIGHT, BUT SHALL BE SYMMETRICAL ABOUT CENTERLINE OF SPAN.

MISSOURI HIGHWAYS AND TRANSPORTATION COMMISSION

OVERHEAD SIGN TRUSSES

ALUMINUM

DATE:_____ EFFECTIVE: 07-01-2002 M903.10Y 1/6

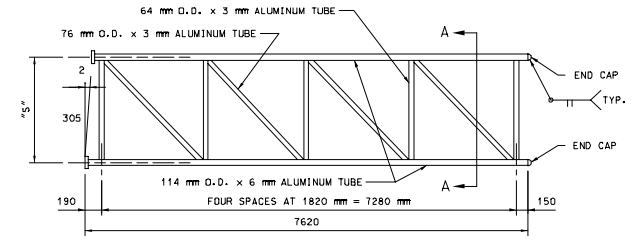

ELEVATION

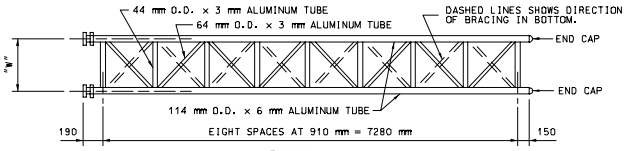

PLAN

7.6 m – CANTILEVER SECTIONS

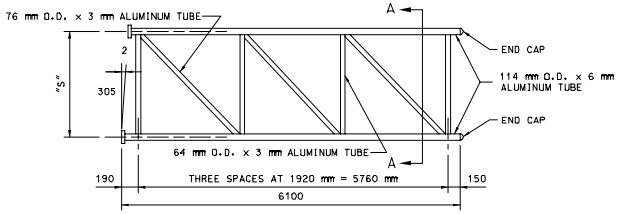

ELEVATION

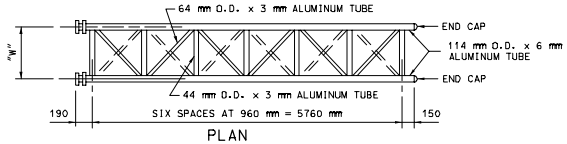

PLAN

6.1 m – CANTILEVER SECTIONS

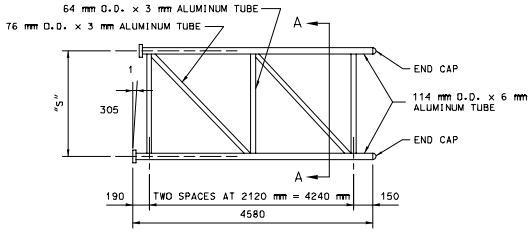

ELEVATION

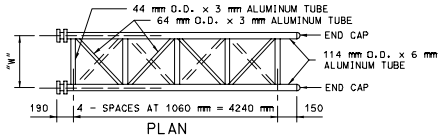

PLAN

4.6 m – CANTILEVER SECTIONS

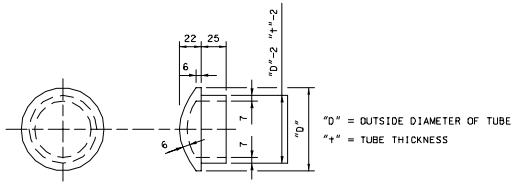

DETAIL OF END CAP CASTING (DRIVE FIT TYPE)

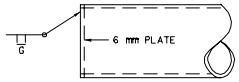

DETAIL OF ALTERNATE END CAP

NOTE: WHEN THE VERTICALS, STRUTS AND SWAYS OBSTRUCT THE PLACING OF BOLTS IN THE FLANGES THESE MEMBERS MAY BE MOVED BACK IN ORDER TO CLEAR THE BOLTS. (ONE SIDE OF SPLICE ONLY).

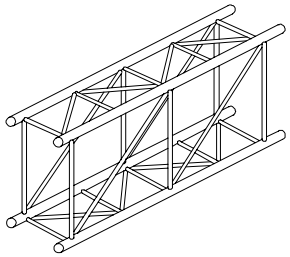

TYPICAL ISOMETRIC VIEW OF TRUSS

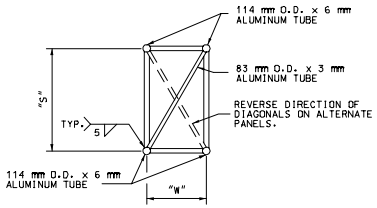

SECTION A–A

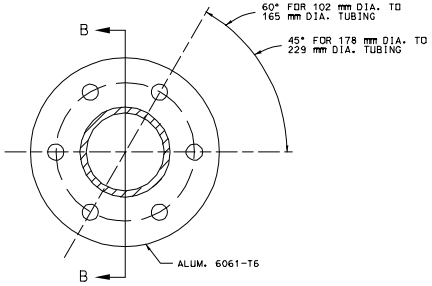

PLAN OF FLANGE PLATE

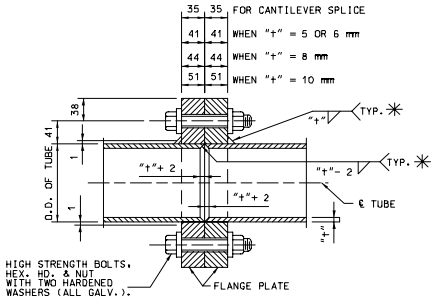

✳ "t" = SMALLER TUBE WALL THICKNESS.

SECTION B–B

NOTE: A WELDING SEQUENCE ASSURING FULL CONTACT OF FLANGE FACES SHALL BE REQUIRED.

DRILL OR REAM FLANGE HOLES 2 mm LARGER THAN NORMAL DIAMETER OF BOLTS OR TUBING.

TUBE SIZE	BOLT NO. AND DIA.	TORQUE
102 mm DIA. TO ALL DIAMETERS	6 – 19 mm	435 N.m OR ONE-HALF TURN
114 mm DIA. THRU 165 mm DIA.	6 – 19 mm	435 N.m OR ONE-HALF TURN
178 mm DIA. THRU 190 mm DIA.	8 – 19 mm	435 N.m OR ONE-HALF TURN
203 mm DIA. THRU 229 mm DIA.	8 – 22 mm	635 N.m OR ONE-HALF TURN

GENERAL NOTES:

ALL DIMENSIONS SHOWN ARE IN mm UNLESS OTHERWISE NOTED.

MISSOURI HIGHWAYS AND TRANSPORTATION COMMISSION

OVERHEAD SIGN TRUSSES

ALUMINUM

DATE:_____ | EFFECTIVE: 07-01-2002 | M903.10Y | 2/6

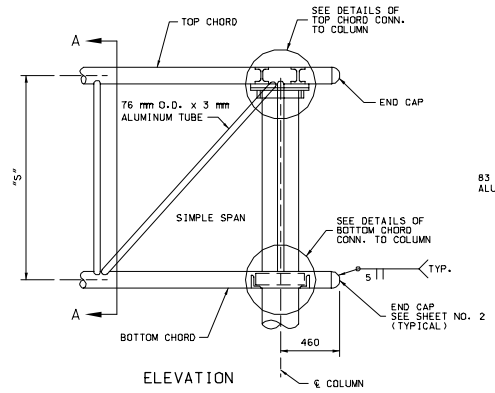

ELEVATION

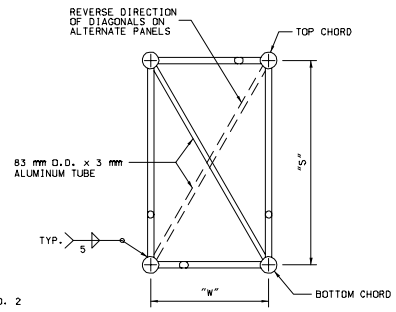

SECTION A–A

NOTE: FOR DIMENSIONS "S" AND "W" SEE SHEET NO. 1

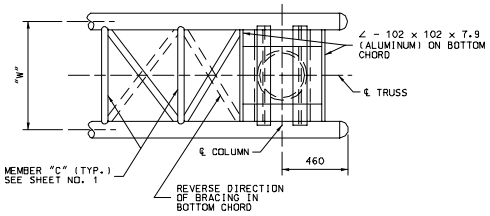

PLAN

TRUSS END WITHOUT CANTILEVER

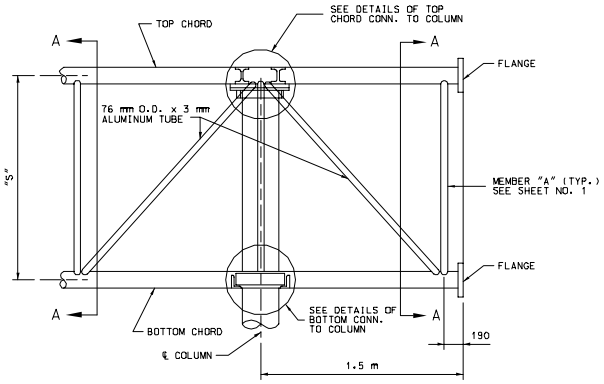

ELEVATION

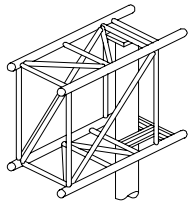

TYPICAL ISOMETRIC VIEW OF END SECTION

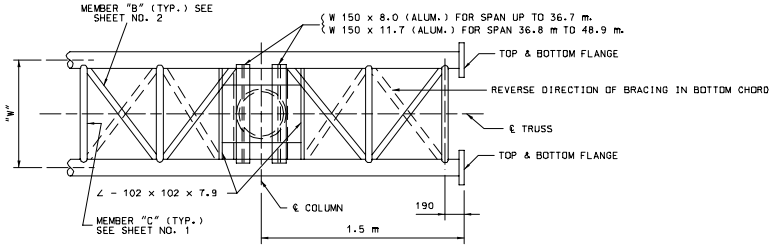

PLAN

TRUSS END MODIFIED FOR CANTILEVER

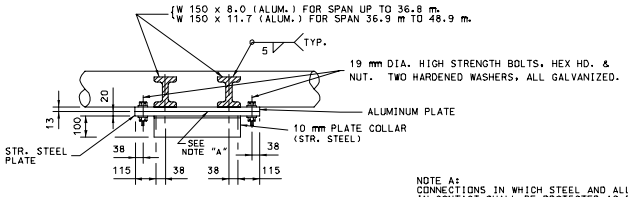

SECTION B–B

NOTE A:
CONNECTIONS IN WHICH STEEL AND ALUMINUM ARE IN CONTACT SHALL BE PROTECTED AS FOLLOWS:
ONE COAT ZINC CHROMATE ON ALUMINUM SURFACES.
NORMAL CLEANING AND PAINTING ON STEEL SURFACES.
NO ZINC CHROMATE REQUIRED IF STEEL IS GALVANIZED.

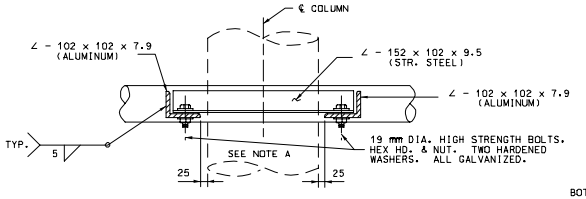

SECTION C–C

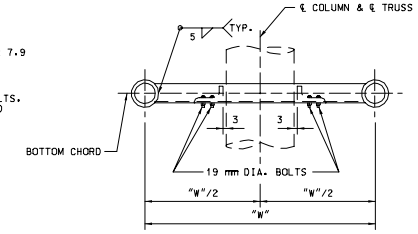

END ELEVATION

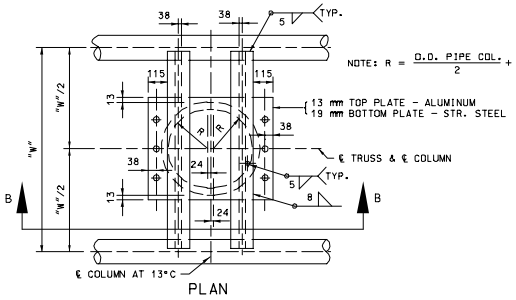

NOTE: $R = \frac{\text{O.D. PIPE COL.}}{2} + 2$ mm

PLAN

DETAIL OF TOP CHORD CONNECTION TO COLUMN

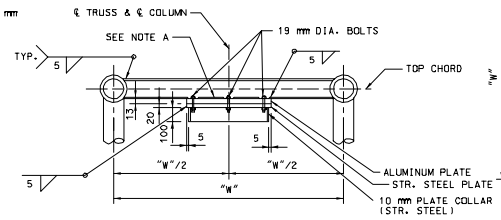

END ELEVATION

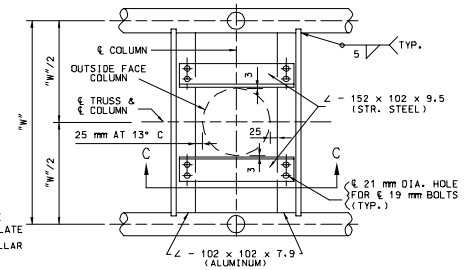

PLAN

DETAILS OF BOTTOM CHORD CONNECTION TO COLUMN

GENERAL NOTES:

ALL DIMENSIONS SHOWN ARE IN mm UNLESS OTHERWISE NOTED.

MISSOURI HIGHWAYS AND TRANSPORTATION COMMISSION			
	OVERHEAD SIGN TRUSSES ALUMINUM		
DATE:_____	EFFECTIVE: 07-01-2002	M903.10Y	3/6

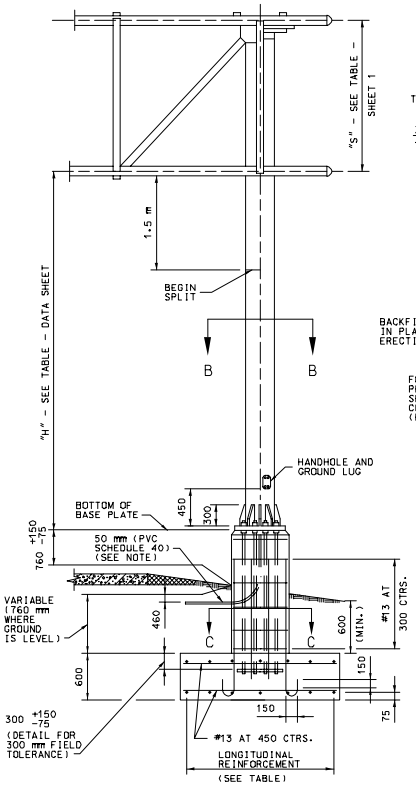

NOTE: THE 50 mm CONDUIT IN THE CONCRETE PEDESTAL SHALL BE PVC SCHEDULE 40 AND SHALL BE PLACED WITH A MINUMUM RADIUS BEND OF 240 mm.

ELEVATION

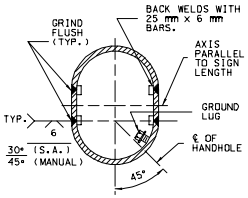

SECTION B-B
(FOR SPLIT COLUMNS ONLY)

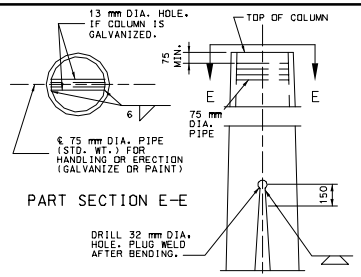

PART SECTION E-E

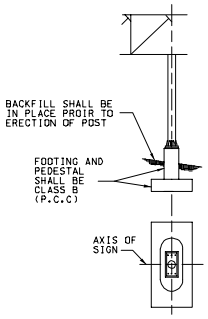

DETAIL SHOWING AXIS OF SIGN

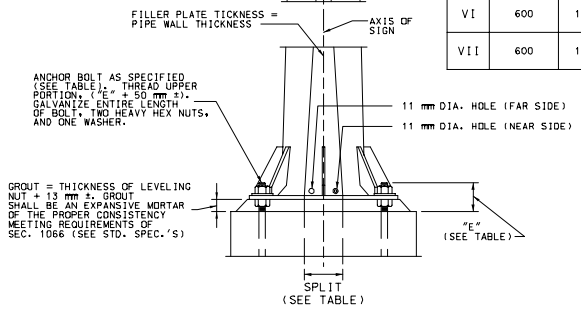

PART ELEVATION

POST TYPE	PIPE COLUMN DIA (mm)	PIPE COLUMN kg/m	DIMENSION "E" (mm)	SPLIT (mm)	BASE PLATE SIZE* (mm)	ANCHOR BOLTS DIA. NO.	ANCHOR BOLTS DIA. (mm)	PEDESTAL SIZE (mm) a	PEDESTAL SIZE (mm) b	FOOTING SIZE * (mm)	LONGITUDINAL FOOTING REINFORCEMENT TOP	LONGITUDINAL FOOTING REINFORCEMENT BOTTOM	CONCRETE (m^3)
I	300	97.36	215	150	760 x 585 x 38	6	57	1220	890	2135 x 4420	7 - #16 BARS	7 - #19 BARS	8.2
II	350	107.28	215	240	915 x 610 x 38	6	57	1320	915	2440 x 4880	8 - #16 BARS	9 - #19 BARS	9.9
III	400	123.18	220	290	1015 x 660 x 44	6	57	1420	965	2590 x 5335	9 - #16 BARS	9 - #22 BARS	11.5
IV	450	139.07	240	320	1090 x 710 x 50	6	64	1550	1015	2895 x 5790	10 - #16 BARS	10 - #25 BARS	13.6
V	500	154.97	240	330	1170 x 840 x 50	8	64	1625	1145	3050 x 6100	10 - #16 BARS	10 - #25 BARS	15.5
VI	600	186.75	240	265	1220 x 990 x 50	8	64	1675	1295	3200 x 6400	11 - #16 BARS	11 - #25 BARS	17.5
VII	600	186.75	240	345	1295 x 990 x 50	8	64	1755	1295	3355 x 6710	11 - #16 BARS	11 - #29 BARS	18.9

* BASE PLATES, PEDESTAL, AND FOOTINGS. LONGER SIDES SHALL BE NORMAL TO AXIS OF SIGN.

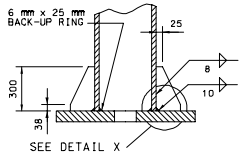

PART SECTION A-A

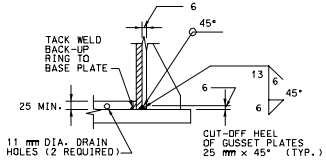

DETAIL X

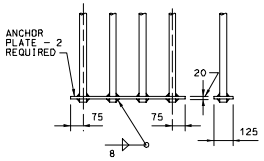

(SHOWN FOR 4 BOLTS - SIMILAR FOR 3 BOLTS)

ANCHORAGE DETAIL A

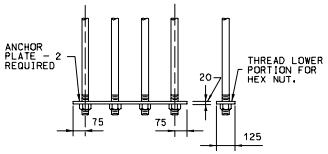

(SHOWN FOR 4 BOLTS - SIMILAR FOR 3 BOLTS)

ANCHORAGE DETAIL B
(OPTIONAL)

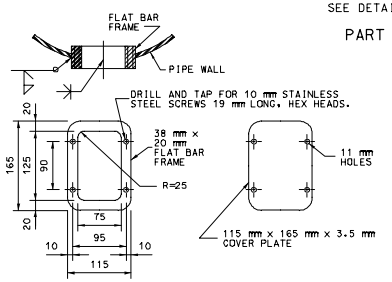

HANDHOLE AND COVER DETAIL
NOTE: HANDHOLE REQUIRED ONLY IN POWER COLUMN.

GENERAL NOTES:

ALL DIMENSIONS SHOWN ARE IN mm UNLESS OTHERWISE NOTED.

A TAPERED TUBE OF EQUIVALENT SIZE AND THICKNESS MAY BE SUBSTITUTED FOR PIPE POST.

ALL STEEL PIPE COLUMNS SHALL BE EITHER GRADE "B" SEAMLESS STEEL PIPE OR GRADE "B" ELECTRIC RESISTANCE WELDED STEEL PIPE: A.S.T.M. SPECIFICATION A53. NO OBJECTIONABLE SEAMS WILL BE PERMITTED.

ALL STRUCTURES SHALL BE GROUNDED.

BURR THREADS ON ALL ANCHOR BOLTS.

A HORIZONTAL WELDED SPLICE MAY BE FABRICATED IN THE COLUMN BETWEEN THE TOP OF PIPE AND 1200 mm BELOW THE BOTTOM CHORDS OF THE TRUSS WHEN DETAILED ON THE SHOP DRAWINGS AND APPROVED BY THE ENGINEER.

GROUND LUGS SHALL BE LOCATED INSIDE COLUMN NEAR HAND HOLE.

QUANTITIES FOR PEDESTAL, BASED ON NOMINAL HEIGHT OF 1500 mm.

QUANTITIES FOR FOOTING, BASED ON NOMINAL DEPTH OF 600 mm.

QUANTITIES SHOWN ARE FOR ONE COLUMN ONLY.

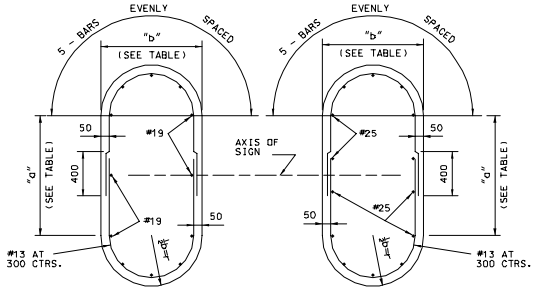

POST TYPE I AND II

POST TYPE III, IV, V, VI, AND VII

SECTION C-C
(TYPICAL SECTION SHOWING REINFORCING STEEL)
NOTE: FOR DETAILS OF ALTERNATE PEDESTAL, SEE SHEET NO. 5 OF 6.

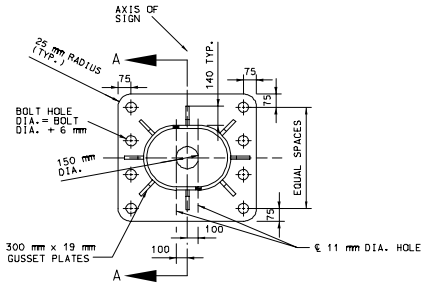

8 ANCHOR TYPE

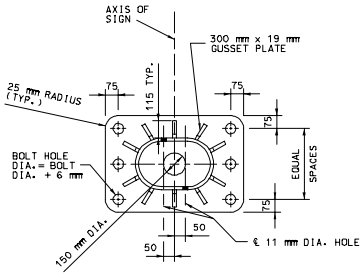

6 ANCHOR TYPE

TYPICAL BASE PLATES

MISSOURI HIGHWAYS AND TRANSPORTATION COMMISSION

OVERHEAD SIGN TRUSSES

ALUMINUM

DATE:_____ | EFFECTIVE: 07-01-2002 | M903.10Y | 4/6

NOTE:
THE 50 mm CONDUIT IN THE CONCRETE PEDESTAL SHALL BE PVC. SCHEDULE 40 AND SHALL BE PLACED WITH A MIN. RADIUS BEND OF 240 mm.

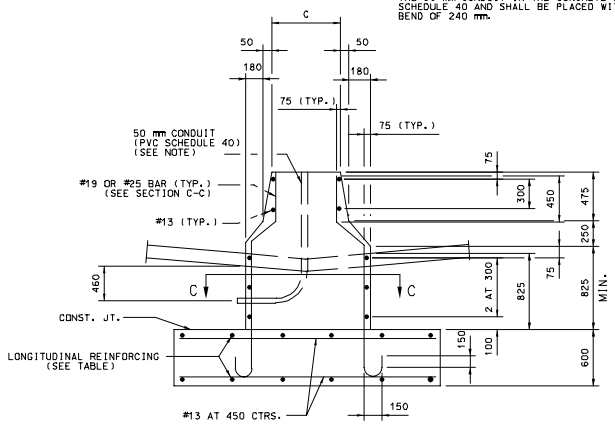

PART ELEVATION
(TYPE A CONCRETE TRAFFIC BARRIER)

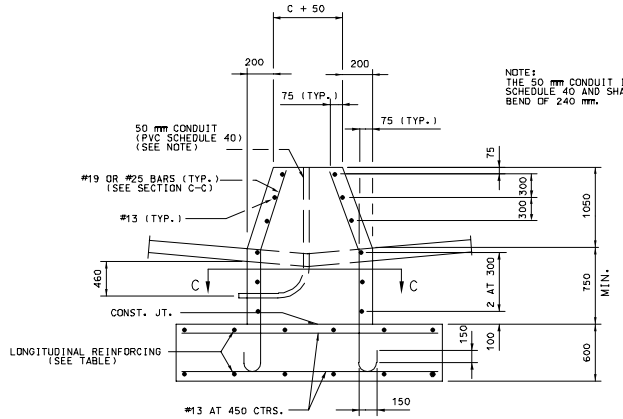

NOTE:
THE 50 mm CONDUIT IN THE CONCRETE PEDESTAL SHALL BE PVC SCHEDULE 40 AND SHALL BE PLACED WITH A MIN. RADIUS BEND OF 240 mm.

PART ELEVATION
(TYPE C CONCRETE TRAFFIC BARRIER)

POST TYPE	PIPE COLUMN		PEDESTAL SIZE ✳ (mm)		FOOTING SIZE ✳ (mm)	LONGITUDINAL FOOTING REINFORCEMENT		CON-CRETE m^3
	DIA. (mm)	kg/m	c	d		TOP	BOTTOM	
I	300	97.36	635	1750	2135 x 4420	7 - #16 BARS	7 - #19 BARS	8.2
II	350	107.28	660	1880	2440 x 4880	8 - #16 BARS	9 - #19 BARS	10.0
III	400	123.18	710	2005	2590 x 5335	9 - #16 BARS	9 - #22 BARS	11.4
IV	450	139.07	760	2160	2895 x 5790	10 - #16 BARS	10 - #25 BARS	13.6
V	500	154.97	890	2335	3050 x 6100	10 - #16 BARS	10 - #25 BARS	15.5
VI	600	186.75	1040	2515	3200 x 6400	11 - #16 BARS	11 - #25 BARS	17.5
VII	600	186.75	1040	2590	3355 x 6710	11 - #16 BARS	11 - #29 BARS	18.9

✳ BASE PLATES, PEDESTAL, AND FOOTINGS LONGER SIDES SHALL BE NORMAL TO AXIS OF SIGN.

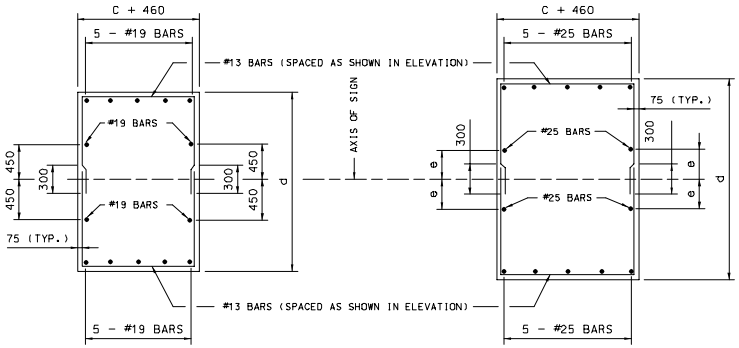

POST TYPE
I AND II

POST TYPE
III, IV, V, VI, AND VII

SECTION C-C
TYPICAL SECTION SHOWING
REINFORCING STEEL

DETAILS OF ALTERNATE PEDESTAL
(TO BE USED ADJACENT TO TYPE "A" MEDIAN BARRIER)

GENERAL NOTES:

ALL DIMENSIONS SHOWN ARE IN mm UNLESS OTHERWISE NOTED.

A TAPERED TUBE OF EQUILVALENT SIZE AND THICKNESS MAY BE SUBSTITUTED FOR PIPE POST.

ALL STEEL PIPE COLUMNS SHALL BE EITHER GRADE "B" SEAMLESS STEEL PIPE OR GRADE "B" ELECTRIC RESISTANCE WELDED STEEL PIPE; A.S.T.M. SPECIFICATION A53. NO OBJECTIONABLE SEAMS WILL BE PERMITTED.

ALL STRUCTURES SHALL BE GROUNDED.

BURR THREADS ON ALL ANCHOR BOLTS.

PIPE COLUMN, BASE PLATE, ANCHOR BOLTS AND NOTES PERTAINING TO THESE ITEMS HAVE BEEN OMITTED FOR CLARITY. REFER TO SHEET NO. 4 OF 8 FOR DETAILS OF THESE ITEMS.

GROUND LUGS SHALL BE LOCATED INSIDE COLUMN NEAR HAND HOLE.

QUANTITIES FOR PEDESTAL, BASED ON NOMINAL HEIGHT OF 1550 mm.

QUANTITIES FOR FOOTING, BASED ON NOMINAL DEPTH OF 600 mm.

QUANTITIES SHOWN ARE FOR ONE COLUMN ONLY.

MISSOURI HIGHWAYS AND TRANSPORTATION COMMISSION

OVERHEAD SIGN TRUSSES

ALUMINUM

DATE:_____ EFFECTIVE: 07-01-2002 M903.10Y 5/6

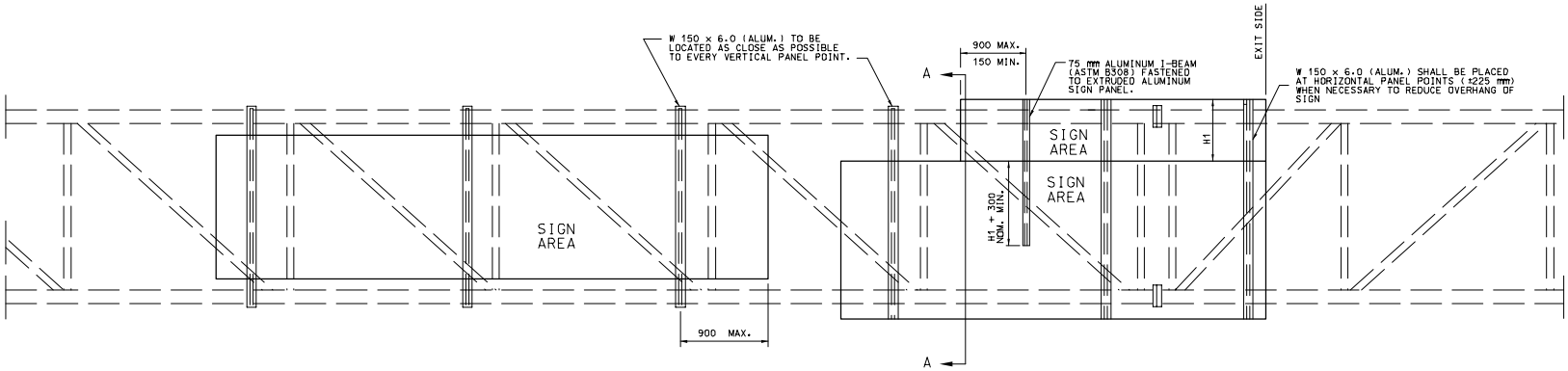

TYPICAL ELEVATION OF SIGN COMPONENTS

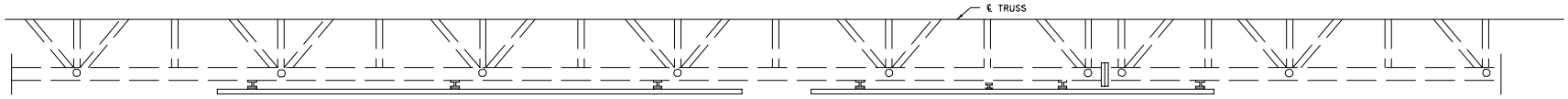

TYPICAL HALF PLAN OF SIGN COMPONENTS

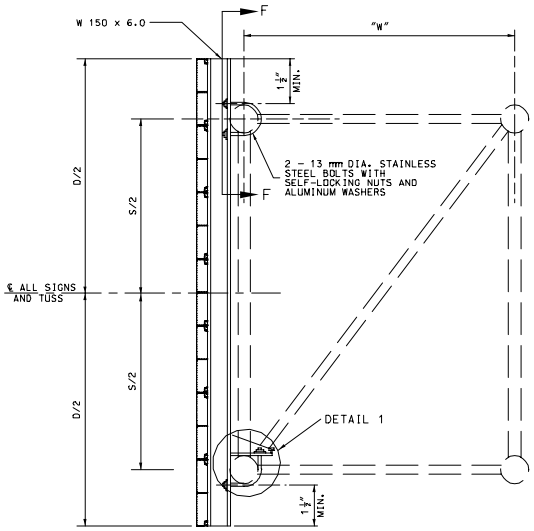

SECTION A-A
TYPICAL SECTION OF SIGN SUPPORT

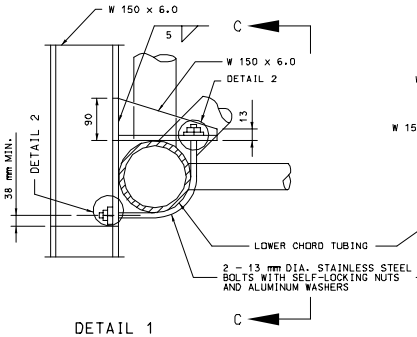

DETAIL 1

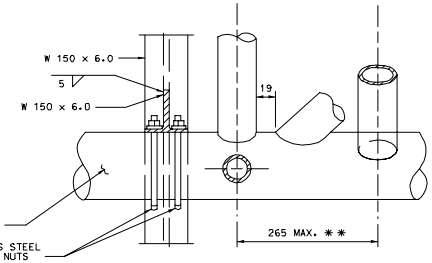

SECTION C-C

** LOCATE THE INTERIOR DIAGONAL AS CLOSE AS POSSIBLE TO THE CENTERLINE OF THE PANEL POINT WITHOUT OVER-LAPPING WELDS.

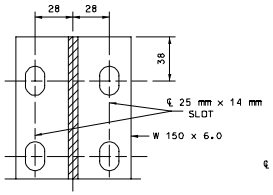

SECTION F-F

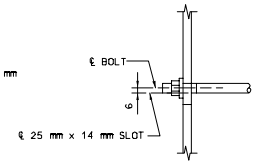

DETAIL 2

GENERAL NOTES:

ALL DIMENSIONS SHOWN ARE IN mm UNLESS OTHERWISE NOTED.

EXIT NO. PANELS SHALL BE MOUNTED FLUSH WITH THE EXIT SIDE OF THE GUIDE SIGN.

ALL SIGNS SHALL BE CENTERED VERTICALLY ABOUT THE HORIZONTAL ℄ OF THE TRUSS.

SEE STD. PLAN 903.09 FOR LIGHTING DETAILS IF LIGHTING THE SIGN IS NECESSARY.

SEE STD. PLAN 903.03 FOR SIGN MOUNTING DETAILS.

ALL MATERIAL ALUMINUM EXCEPT AS NOTED.

MISSOURI HIGHWAYS AND TRANSPORTATION COMMISSION			
	OVERHEAD SIGN TRUSSES ALUMINUM		
DATE:_____	EFFECTIVE: 07-01-2002	M903.10Y	6/6