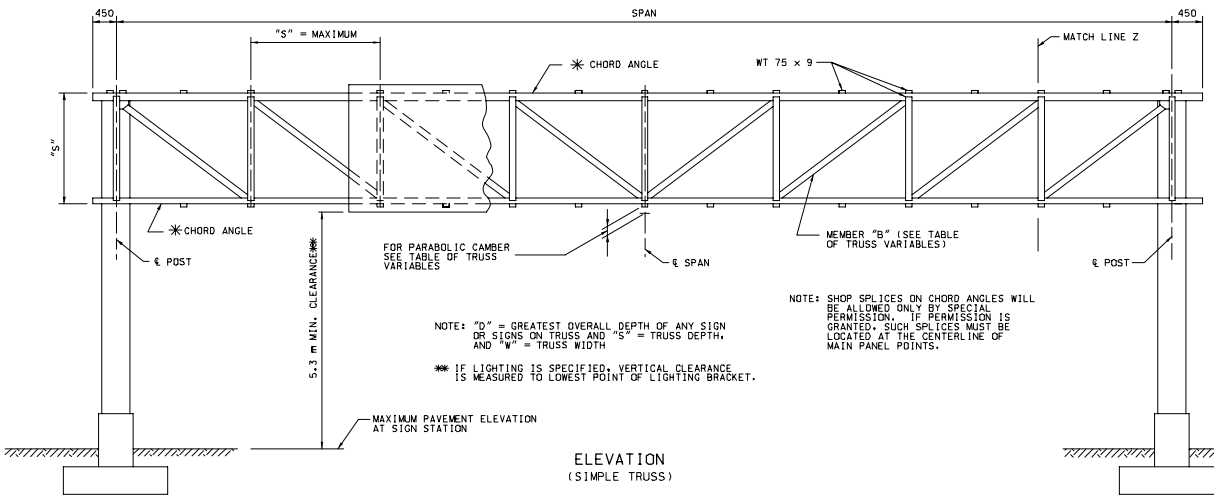

NOTE: "D" = GREATEST OVERALL DEPTH OF ANY SIGN OR SIGNS ON TRUSS AND "S" = TRUSS DEPTH, AND "W" = TRUSS WIDTH

✳✳ IF LIGHTING IS SPECIFIED, VERTICAL CLEARANCE IS MEASURED TO LOWEST POINT OF LIGHTING BRACKET.

NOTE: SHOP SPLICES ON CHORD ANGLES WILL BE ALLOWED ONLY BY SPECIAL PERMISSION. IF PERMISSION IS GRANTED, SUCH SPLICES MUST BE LOCATED AT THE CENTERLINE OF MAIN PANEL POINTS.

ELEVATION
(SIMPLE TRUSS)

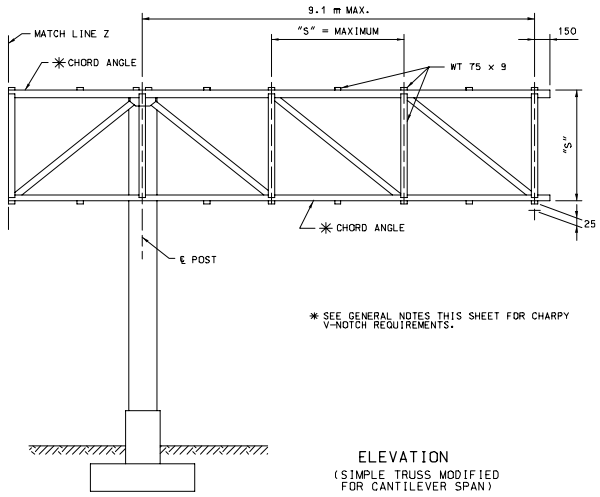

✳ SEE GENERAL NOTES THIS SHEET FOR CHARPY V-NOTCH REQUIREMENTS.

ELEVATION
(SIMPLE TRUSS MODIFIED FOR CANTILEVER SPAN)

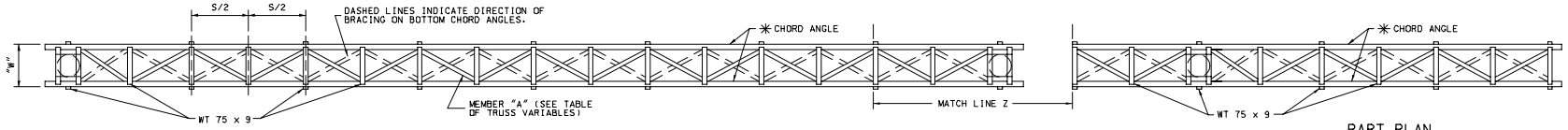

PART PLAN

PART PLAN

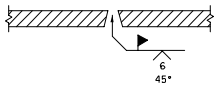

SECTION A-A

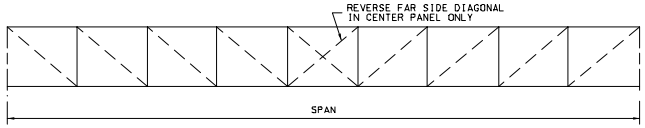

TRUSS ELEVATION
(UNEVEN NUMBER OF TRUSS PANELS)

TRUSS VARIABLES					
SPAN (m)	"S" (mm)	"W" (mm)	MEMBER "A"	MEMBER "B"	SHOP CAMBER
≤ 24.5	1829	1220	L 64 x 64 x 6.4	L 64 x 64 x 6.4	50
24.6 TO 30.6	1829	1525	L 76 x 76 x 6.4	L 64 x 64 x 6.4	64
30.7 TO 39.8	2134	1830	L 76 x 76 x 6.4	L 76 x 76 x 6.4	90
39.9 TO 45.9	2438	1830	L 89 x 89 x 7.9	L 89 x 89 x 7.9	115
46.0 TO 48.9	2438	2135	L 89 x 89 x 7.9	L 89 x 89 x 7.9	140

NOTE: FOR SIZE OF CHORD MEMBERS SEE DATA SHEET.

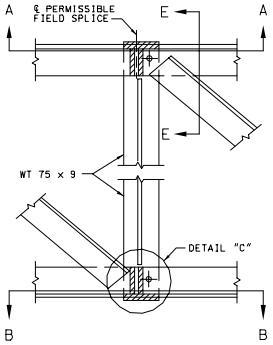

SECTION THRU TRUSS LOCATING SPLICES

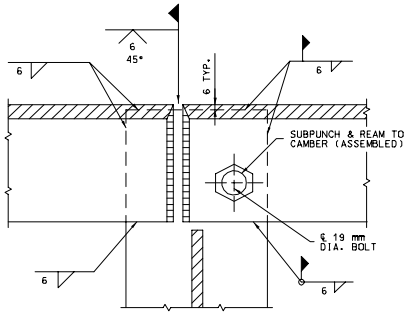

SECTION B-B

NOTE: 19 mm DIA. BOLTS SHALL BE REMOVED AFTER WELDING IS COMPLETE. BOLT HOLES SHALL BE PLUGGED AND THE OUTSIDE FACE GROUND SMOOTH.

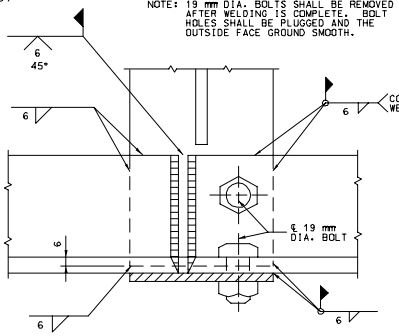

DETAIL "C"

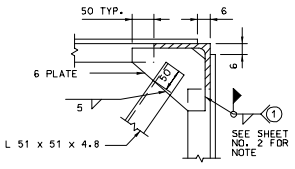

SECTION E-E
(FIELD SPLICE ONLY)

DETAIL OF FIELD SPLICES
(IF ANY)

GENERAL NOTES:

ALL DIMENSIONS SHOWN ARE IN mm UNLESS OTHERWISE NOTED.

ALL STRUCTURAL STEEL AND COLUMN BASE PLATES ASTM A36, EXCEPT THAT CHORD ANGLES GREATER THAN 12 mm IN THICKNESS SHALL BE AASHTO M183 WITH SUPPLEMENTAL REQUIREMENTS: S5, CHARPY V-NOTCH IMPACT TEST FOR TEMPERATURE ZONE 2.

ALL ANCHOR BLOTS ASTM A370.

PROPOSED FIELD SPLICES SHALL BE SHOWN ON SHOP DRAWINGS FOR APPROVAL OF THE ENGINEER.

TRUSSES SHALL BE FABRICATED WITH A MINIMUM OF SPLICING IN TRUSS CHORDS.

FIELD SPLICING WILL NOT BE PERMITTED WITHIN THE MIDDLE ONE-THIRD OF SPAN.

FOR ADDITIONAL INFORMATION SEE DATA SHEET.

ZINC CHROMATE PRIMER SHALL MEET THE REQUIREMENTS OF FEDERAL SPECIFICATIONS TT-P-645 OR TT-P-1757 AND SHALL BE ACCEPTED ON THE BASIS OF THE LABEL SHOWING CONFORMANCE OR A MANUFACTURER'S CERTIFICATION.

MISSOURI HIGHWAYS AND TRANSPORTATION COMMISSION

OVERHEAD SIGN TRUSSES

STRUCTURAL STEEL

DATE:_____ | EFFECTIVE: 07-01-2002 | M903.60Y | 1/5

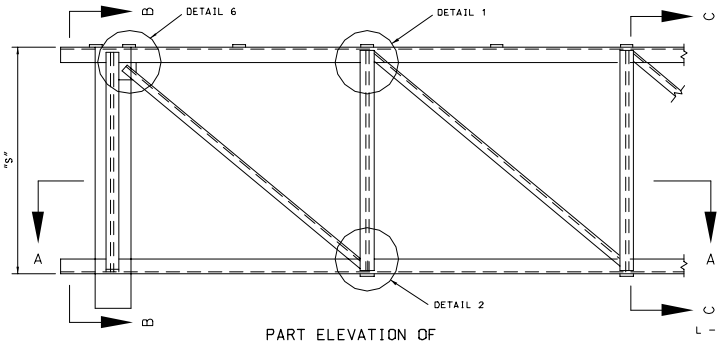

PART ELEVATION OF TRUSS

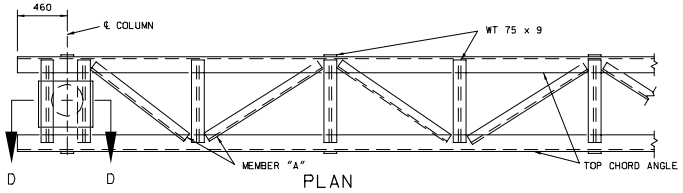

PLAN

NOTE: FOR SIZE OF MEMBER "A" SEE TABLE OF TRUSS VARIABLES, SHEET NO 1.

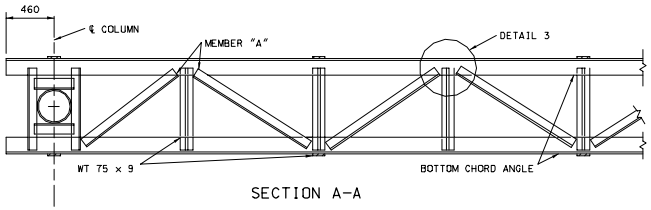

SECTION A-A

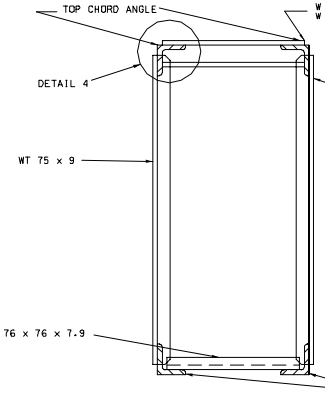

SECTION B-B

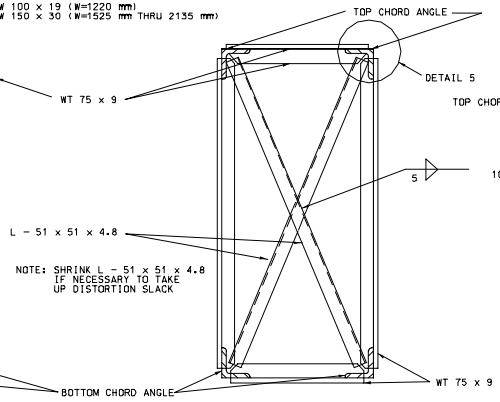

SECTION C-C

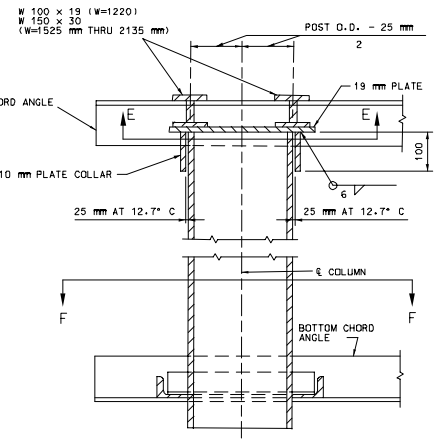

SECTION D-D

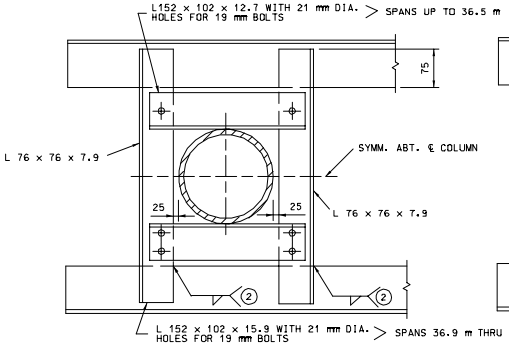

NOTE: BOLTS SHALL BE HIGH STRENGTH STEEL WITH HARDENED WASHERS UNDER HEAD AND NUT.

SECTION F-F

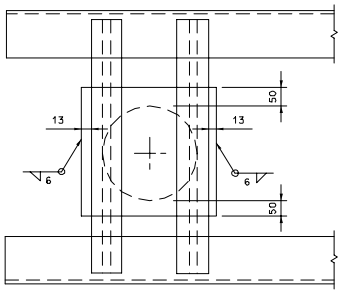

PLAN OF POST

NOTE: FILLET WELD 2 (SHOP OR FIELD) SHALL BE 5 mm WHEN "t" IS 13 mm OR LESS AND 6 mm WHEN "t" IS GREATER THAN 13 mm.

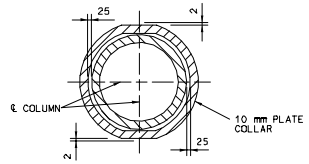

SECTION E-E

NOTE: DETAILS OF CANTILEVER END SECTION ARE SIMILAR TO THOSE SHOWN ON THIS SHEET.

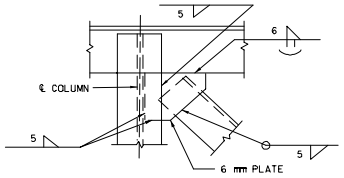

DETAIL 6

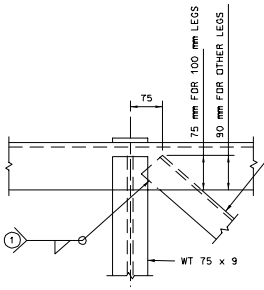

DETAIL 1

NOTE: IF DESIRED THE OUTSTANDING LEGS OF DIAGONAL ANGLES MAY BE CLIPPED AT 45° TO FACILITATE ASSEMBLY AND WELDING.

NOTE: FOR SIZE OF MEMBER "B" SEE TABLE OF TRUSS VARIABLES, SHEET NO. 1.

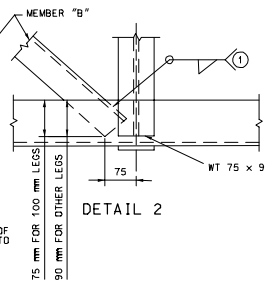

DETAIL 2

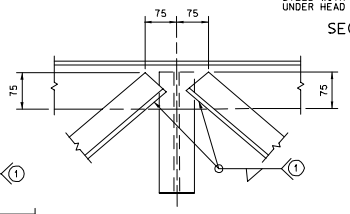

DETAIL 3

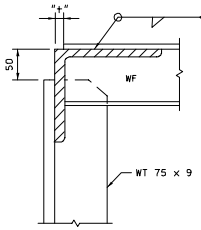

DETAIL 4

NOTE: SLOT WEB OF STRUCTURAL TEE'S AND WIDE FLANGES TO RECEIVE LEG OF CHORD ANGLES (TYPICAL).

FILLET WELD 1 SHALL BE 5 mm WHEN "t" IS 13 mm OR LESS AND 6 mm WHEN "t" IS GREATER THAN 13 mm.

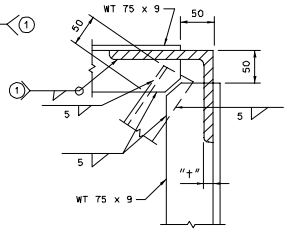

DETAIL 5

TYPICAL FOR ALL PANEL POINT FRAMING EXCEPT AT FIELD SPLICES, IF ANY, AND COLUMN SUPPORTS.

GENERAL NOTES:

ALL DIMENSIONS SHOWN ARE IN mm UNLESS OTHERWISE NOTED.

MISSOURI HIGHWAYS AND TRANSPORTATION COMMISSION

OVERHEAD SIGN TRUSSES

STRUCTURAL STEEL

DATE:	EFFECTIVE: 07-01-2002	M903.60Y	2/5

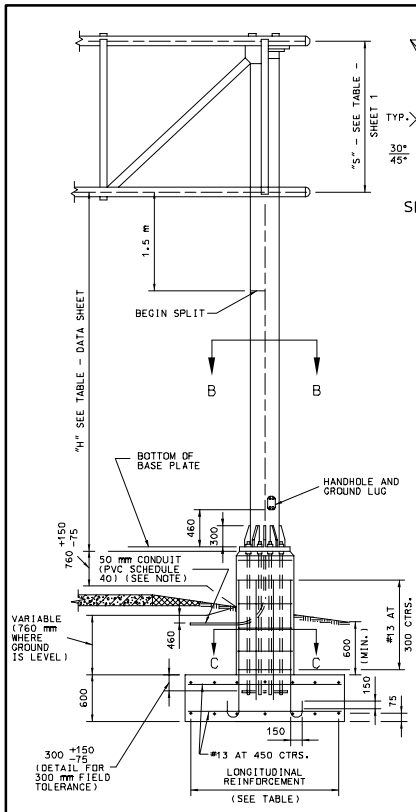

NOTE: THE 50 mm CONDUIT IN THE CONCRETE PEDESTAL SHALL BE PVC SCHEDULE 40 AND SHALL BE PLACED WITH A MINUMUM RADIUS BEND OF 240 mm.

ELEVATION

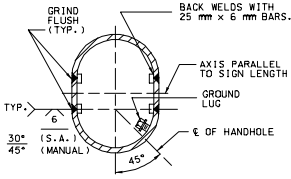

SECTION B-B

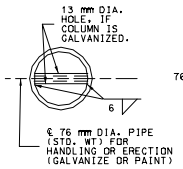

PART SECTION E-E

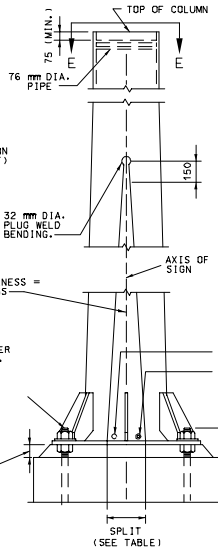

PART ELEVATION

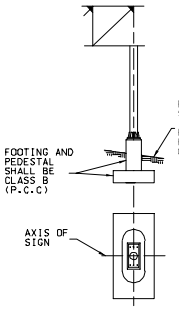

DETAIL SHOWING AXIS OF SIGN

ANCHOR BOLT AS SPECIFIED (SEE TABLE). THREAD UPPER PORTION. ("E" + 150 mm±). GALVANIZE ENTIRE LENGTH OF BOLT. HEAVY HEX NUTS. AND ONE WASHER.

GROUT = THICKNESS OF LEVELING NUT + 13 mm±. GROUT SHALL BE AN EXPANSIVE MORTAR OF THE PROPER CONSISTENCY MEETING REQUIREMENTS OF SEC. 1066 (SEE STD. SPEC.'S)

POST TYPE	PIPE COLUMN DIA (mm)	PIPE COLUMN Kg/m	"E" (mm)	SPLIT (mm)	BASE PLATE SIZE* (mm)	ANCHOR BOLTS DIA. NO.	ANCHOR BOLTS DIA. mm	PEDESTAL SIZE (mm) a	PEDESTAL SIZE (mm) b	FOOTING SIZE* (mm)	LONGITUDINAL FOOTING REINFORCEMENT TOP	LONGITUDINAL FOOTING REINFORCEMENT BOTTOM	CONCRETE m^3
I	300	97.36	215	150	760 x 585 x 38	6	57	1220	890	2135 x 4420	7 - #16 BARS	7 - #19 BARS	8.2
II	350	107.28	215	240	915 x 610 x 38	6	57	1320	915	2440 x 4880	8 - #16 BARS	9 - #19 BARS	9.9
III	400	123.18	220	290	1015 x 660 x 44	6	57	1420	965	2590 x 5335	9 - #16 BARS	9 - #22 BARS	11.5
IV	450	139.07	240	320	1090 x 710 x 50	6	64	1550	1015	2895 x 5790	10 - #16 BARS	10 - #25 BARS	13.6
V	500	154.97	240	330	1170 x 840 x 50	8	64	1625	1145	3050 x 6100	10 - #16 BARS	10 - #25 BARS	15.5
VI	600	186.75	240	265	1220 x 990 x 50	8	64	1675	1295	3200 x 6400	11 - #16 BARS	11 - #25 BARS	17.5
VII	600	186.75	240	345	1295 x 990 x 50	8	64	1755	1295	3355 x 6710	11 - #16 BARS	11 - #29 BARS	18.9

* BASE PLATES, PEDESTAL, AND FOOTINGS, LONGER SIDES SHALL BE NORMAL TO AXIS OF SIGN.

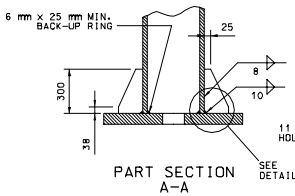

PART SECTION A-A

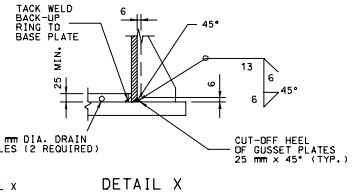

DETAIL X

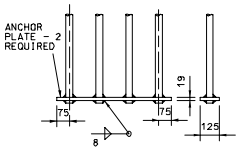

(SHOWN FOR 4 BOLTS - SIMILAR FOR 3 BOLTS)

ANCHORAGE DETAIL A

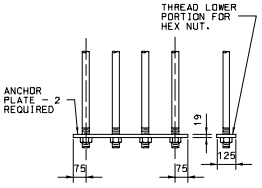

(SHOWN FOR 4 BOLTS - SIMILAR FOR 3 BOLTS)

ANCHORAGE DETAIL B (OPTIONAL)

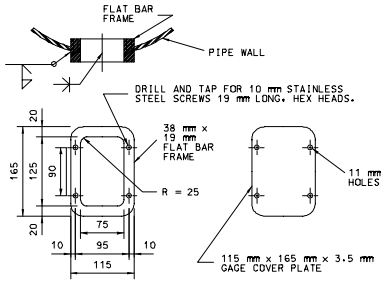

HANDHOLE AND COVER DETAILS

NOTE: HANDHOLE REQUIRED ONLY IN POWER COLUMN.

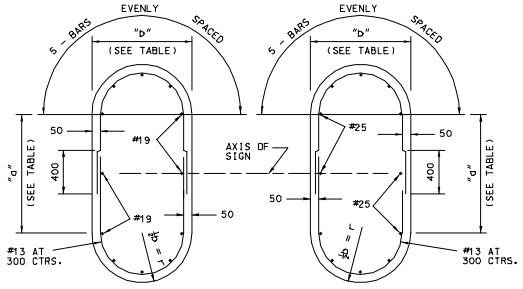

POST TYPE I AND II

POST TYPE III, IV, V, VI, AND VII

SECTION C-C

(TYPICAL SECTION SHOWING REINFORCING STEEL)

NOTE: FOR DETAILS OF ALTERNATE PEDESTAL, SEE SHEET NO. 4 OF 5.

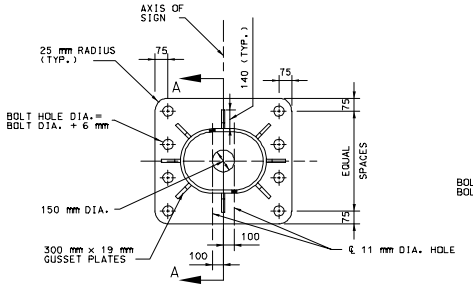

8 ANCHOR TYPE

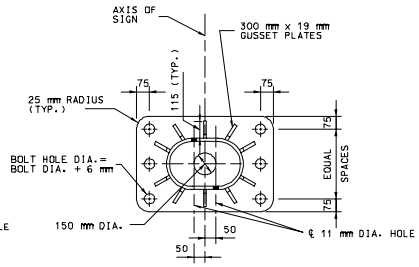

6 ANCHOR TYPE

TYPICAL BASE PLATES

GENERAL NOTES:

ALL DIMENSIONS SHOWN ARE IN mm UNLESS OTHERWISE NOTED.

A TAPERED TUBE OF EQUIVALENT SIZE AND THICKNESS MAY BE SUBSTITUTED FOR PIPE POST.

ALL STEEL PIPE COLUMNS SHALL BE EITHER GRADE "B" SEAMLESS STEEEL PIPE OR GRADE "B" ELECTRIC RESISTANCE WELDED STEEL PIPE: A.S.T.M. SPECIFICATION A53. NO OBJECTIONABLE SEAMS WILL BE PERMITTED.

ALL STRUCTURES SHALL BE GROUNDED.

BURR THREADS ON ALL ANCHOR BOLTS.

A HORIZONTAL WELDED SPLICE MAY BE FABRICATED IN THE COLUMN BETWEEN THE TOP OF PIPE AND 1200 mm BELOW THE BOTTOM CHORDS OF THE TRUSS WHEN DETAILED ON THE SHOP DRAWINGS AND APPROVED BY THE ENGINEER.

GROUND LUGS SHALL BE LOCATED INSIDE COLUMN NEAR HAND HOLE.

QUANTITIES FOR PEDESTAL, BASED ON NOMINAL HEIGHT OF 1500 mm.

QUANTITIES FOR FOOTING, BASED ON NOMINAL DEPTH OF 600 mm.

QUANTITIES SHOWN ARE FOR ONE COLUMN ONLY.

MISSOURI HIGHWAYS AND TRANSPORTATION COMMISSION

OVERHEAD SIGN TRUSS

STRUCTURAL STEEL

DATE:_____ EFFECTIVE: 07-01-2002 M903.60Y 3/5

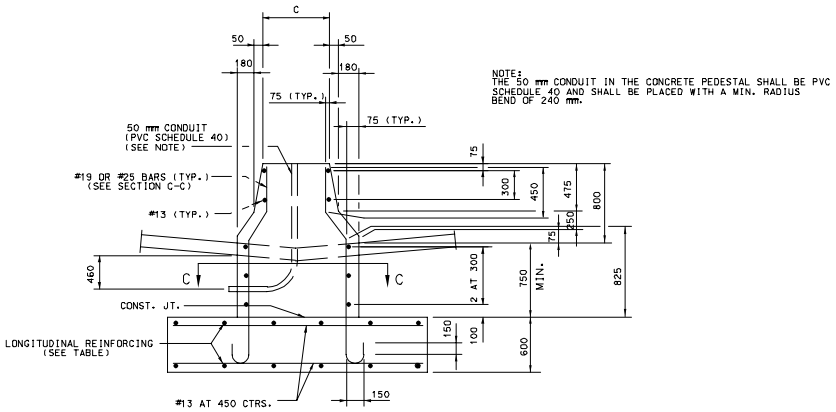

PART ELEVATION
(TYPE A CONCRETE TRAFFIC BARRIER)

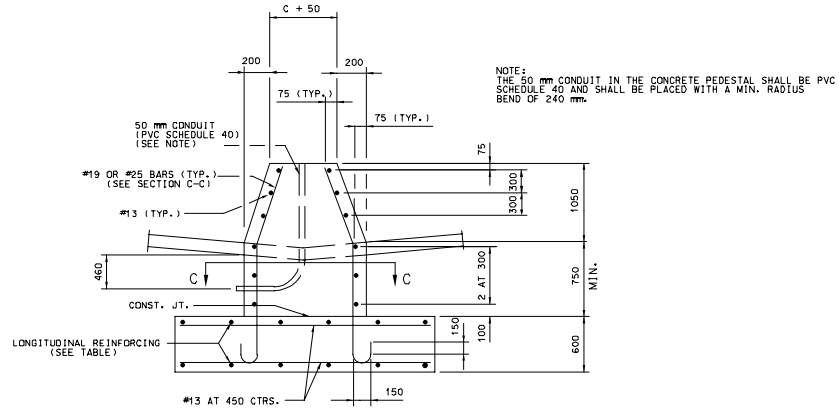

PART ELEVATION
(TYPE C CONCRETE TRAFFIC BARRIER)

POST TYPE	PIPE COLUMN		PEDESTAL SIZE ✳ (mm)		FOOTING SIZE ✳ (mm)	LONGITUDINAL FOOTING REINFORCEMENT		CONCRETE m³	
	DIA. (mm)	kg/m	C	d		TOP	BOTTOM	TYPE A MEDIAN BARRIER	TYPE C MEDIAN BARRIER
I	300	97.36	635	1750	2135 x 4420	7 - #16 BARS	7 - #19 BARS	8.2	8.7
II	350	107.28	660	1880	2440 x 4880	8 - #16 BARS	9 - #19 BARS	10.0	10.5
III	400	123.18	710	2005	2590 x 5335	9 - #16 BARS	9 - #22 BARS	11.4	12.1
IV	450	139.07	760	2160	2895 x 5790	10 - #16 BARS	10 - #25 BARS	13.6	14.3
V	500	154.97	890	2335	3050 x 6100	10 - #16 BARS	10 - #25 BARS	15.5	16.3
VI	600	186.75	1040	2515	3200 x 6400	11 - #16 BARS	11 - #25 BARS	17.5	18.6
VII	600	186.75	1040	2590	3355 x 6710	11 - #16 BARS	11 - #29 BARS	18.9	20.0

✳ BASE PLATES, PEDESTAL, AND FOOTINGS LONGER SIDES SHALL BE NORMAL TO AXIS OF SIGN.

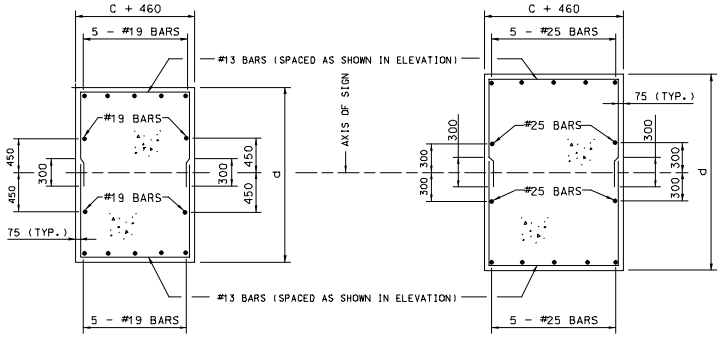

POST TYPE
I AND II

POST TYPE
III, IV, V, VI, AND VII

SECTION C-C
TYPICAL SECTION SHOWING
REINFORCING STEEL

DETAILS OF ALTERNATE PEDESTAL

(TO BE USED ADJACENT TO TYPE "A" OR "C" MEDIAN BARRIER)

GENERAL NOTES:

ALL DIMENSIONS SHOWN ARE IN mm UNLESS OTHERWISE NOTED.

A TAPERED TUBE OF EQUILVALENT SIZE AND THICKNESS MAY BE SUBSTITUTED FOR PIPE POST.

ALL STEEL PIPE COLUMNS SHALL BE EITHER GRADE "B" SEAMLESS STEEL PIPE OR GRADE "B" ELECTRIC RESISTANCE WELDED STEEL PIPE; A.S.T.M. SPECIFICATION A53. NO OBJECTIONABLE SEAMS WILL BE PERMITTED.

ALL STRUCTURES SHALL BE GROUNDED.

BURR THREADS ON ALL ANCHOR BOLTS.

GROUND LUGS SHALL BE LOCATED INSIDE COLUMN NEAR HAND HOLE.

QUANTITIES FOR PEDESTAL ARE BASED ON 1550 mm (TYPE A MEDIAN BARRIER) OR 1800 mm (TYPE C MEDIAN BARRIER).

QUANTITIES FOR FOOTING ARE BASED ON NOMINAL DEPTH OF 600 mm.

QUANTITIES SHOWN ARE FOR ONE COLUMN ONLY.

MISSOURI HIGHWAYS AND TRANSPORTATION COMMISSION

OVERHEAD SIGN TRUSSES

STRUCTURAL STEEL

DATE:_____ EFFECTIVE: 07-01-2002 M903.60Y

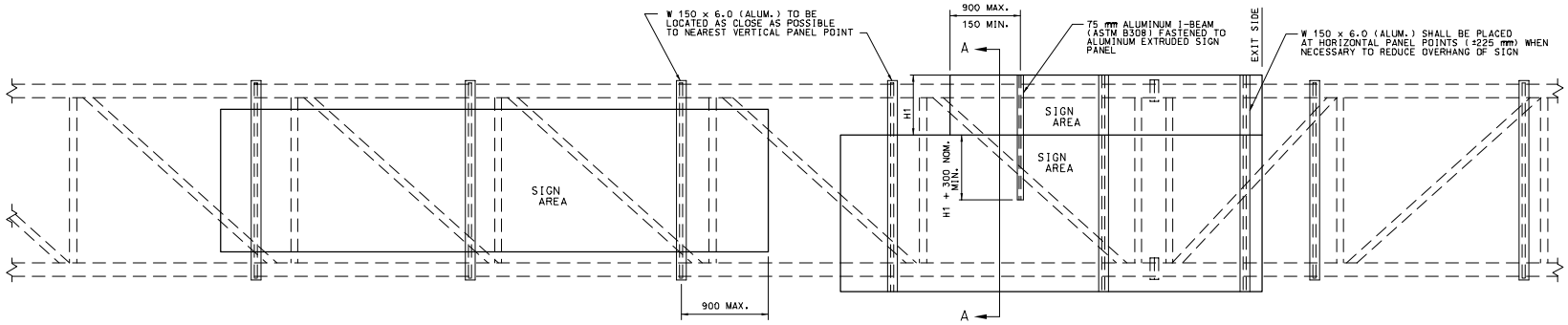

TYPICAL ELEVATION OF SIGN COMPONENTS

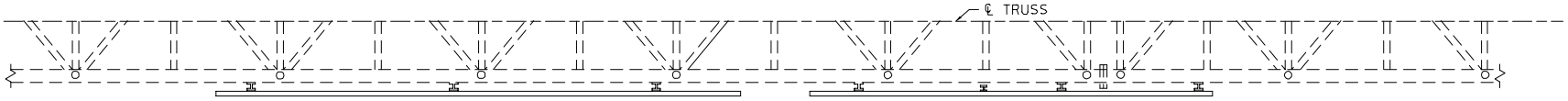

TYPICAL HALF PLAN OF SIGN COMPONENTS

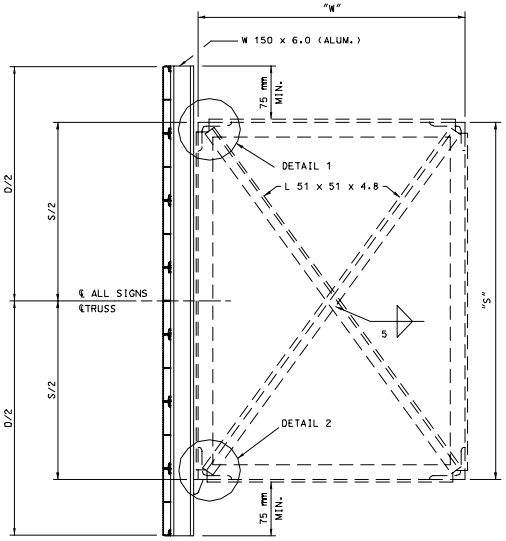

SECTION A-A

TYPICAL SECTION OF SIGN SUPPORT

NOTE: "D" = GREATEST OVERALL DEPTH OF ANY SIGN OR SIGNS ON TRUSSES AND "S"= TRUSS DEPTH. SEE SHEET NO. 5 OF 7 FOR LOCATION OF SECTION A-A.

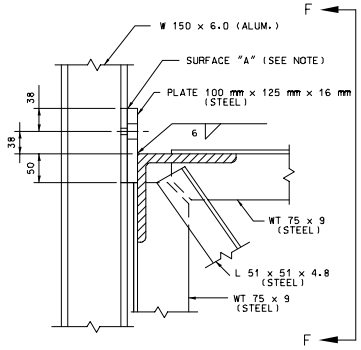

DETAIL 1

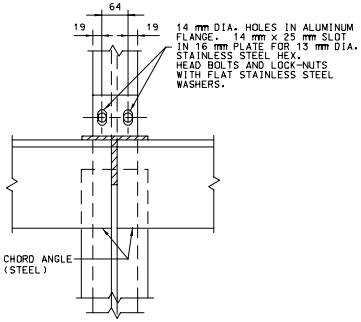

SECTION F-F

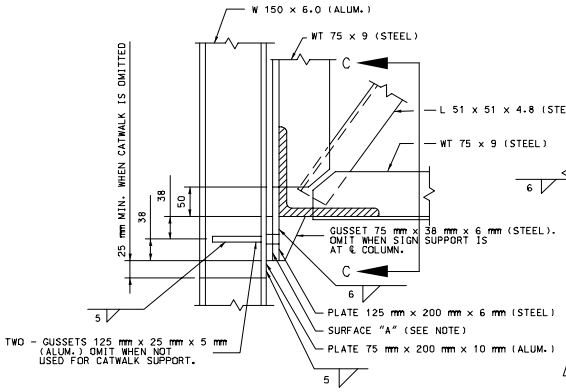

DETAIL 2

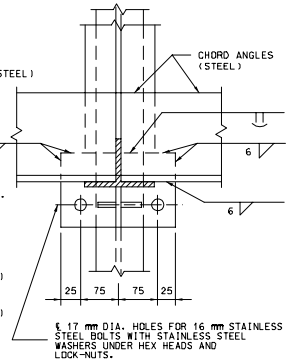

SECTION C-C

NOTE: SURFACE "A", ZINC CHROMATE ON ALUMINUM SURFACES.
NORMAL CLEANING AND PAINTING ON STEEL SURFACES.
ZINC CHROMATE IS NOT REQUIRED WHEN STEEL IS GALVANIZED.

GENRAL NOTES:

EXIT NO. PANELS SHALL BE MOUNTED FLUSH WITH THE EXIT SIDE OF THE GUIDE SIGN.

ALL SIGNS SHALL BE CENTEREDVERTICALLY ABOUT THE HORIZONTAL ℄ OF THE TRUSS.

SEE STANDARD PLAN 903.9 LIGHTING DETAILS IF LIGHTING THE SIGN IS NECESSARY.

SEE STANDARD PLAN 903.9 FOR SIGN MOUNTING DETAILS.

MISSOURI HIGHWAYS AND TRANSPORTATION COMMISSION

OVERHEAD SIGN TRUSSES

STRUCTURAL STEEL

DATE:	EFFECTIVE: 07-01-2002	M903.60Y	5/5